fischer

# Catalogue
## Installation Systems



# Foreword

## Dear business partners,

With pioneering innovations and top quality, we have been increasing efficiency and reliability in construction for decades. Day after day, we open ourselves up to new ideas and strive for perfection and pioneering fixing solutions. The roots of our innovations are inexhaustible inventiveness and 75 years of technological expertise.
We place the highest demands on your satisfaction, valued customers. Because our motivation is to meet your daily challenges with the most suitable solutions. System solutions perfectly tailored to your applications complement our wide range of plastic plugs, steel anchors, chemical fixing systems and much more. Our fixing and installation solutions for building services mechanical, electrical and plumbing (MEP) speed up the installation of cables, simplify installation, shorten construction times and reduce your project costs. The wide range of installation systems made of galvanised, hot-dip galvanised and stainless steel covers light to heavy loads and a variety of applications. Depending on the building situation and the scope of the pipework, the required components can be put together in modular form.
New additions are our fixed points and sliding elements, which absorb thermally induced expansion of pipes and thus prevent damage to the pipes. Various designs are suitable for different loads and structural conditions.
We support your integral planning perfectly with our services and data for Building Information Modelling (BIM). Our INSTALL-FIX software tool within our fischer FiXperience dimensioning software is also used specifically for dimensioning our channel system and determining the required quantities. Our digital offerings also extend to automated construction and networked fixing products in the Internet of Things (IoT). For example, our BauBot robot takes over the drilling and installation of fischer fixing solutions in floors, ceilings and walls on the construction site in a globally unique way. Our sensor innovation fischer Construction Monitoring also enables you for the first time to monitor the pre-tensioning forces present in fixings at any time.

We accompany you, dear customers, through all construction phases of your projects. And we do so worldwide. In our own fischer Construction Engineering GmbH, we bundle our expertise and increase efficiency, safety and precision on the construction site. We offer you numerous services right from the planning stage, including advice, dimensioning, support with approval procedures, BIM modelling and CAD as well as fire protection and much more. We also support you during implementation with installation planning, pre-assembly service, instruction or on-site support. We are a strong partner at your side right through to successful project completion.

We hope you enjoy reading our new catalogue and using our MEP installation solutions!



**Andreas Voll**
*Chairman of the management board of the fischer group of companies*



**„Whoever chooses fischer receives more than a range of safe products. The aim is to always develop the best solutions for our customers across the globe.“**

Besides the innovative products, this predominantly concerns support that is focused on the customer, and services designed to improve customer benefit.

# A brand and its promise to perform.

## Continuous improvement

With the fischer ProzessSystem (fPS) we ensure that we are adapting and optimising our processes in line with customer requirements in a flexible manner and on a continuous basis.

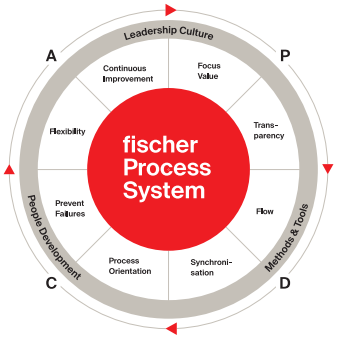


## Safety that connects. Decisive quality

We don’t make any compromises when it comes to the safety of our products. A whole host of our products are distinguished by comprehensive, up-to-date and international approvals. The fischer product range is well-positioned in all sectors of fixing technology – Steel, Nylon and Chemical fixings. In awardwinning quality which continues to impress both professional clients and private customers with equal measure.

ICC ES ESR-1990 See ICC-ES Evaluation Report at www.icc-es.org

ETA CE





## Always on the pulse of time

At fischer, innovation is more than just the sum of the patents. We are open to new things and are prepared for change – always with the aim of offering our customers the greatest possible benefits. Over the years, our own development and production sites have been developing numerous fixing solutions for the most wide-ranging applications. Be it new production procedures or materials, such as renewable raw materials: We are carrying out the research for your safety and will continue to do so in the future. This gives us such great flexibility that we can even develop tailor-made customer solutions. This power to innovate has seen fischer become a market leader in anchor technology and the fixing industry.

## Our service to you

We are a reliable partner, one that will stand at your side and address your individual requirements with advice and action:

- Our products range from chemical systems to steel anchors through to plastic anchors.
- Competence and innovation through own research, development and production.
- Global presence and active sales service in over 100 countries.
- Qualified technical consulting for economical and compliant fastening solutions. Also on-site at the construction site requested.
- Training sessions, some with accreditation, at your premises or at the fischer academy.
- Design and construction software for demanding applications.

## We take responsibility

Our active environment management policy means that we are helping to maintain an intact environment for our generation and for those that follow. The environment management policy at the Tumlingen site has been certified in line with DIN EN ISO 14001.
It fills us with particular pride that in 2020 we have received the most important and largest award in Europe in the field of sustainability: the German Sustainability Award - category large companies.
This was in recognition of our holistic approach and the strategic anchoring of our sustainability management.
With our greenline products we have launched the first range of fixings on the market that is based on renewable raw materials to more than 50%.



German Sustainability Award

Plus X Award – Sustainability

GreenLine assortment based on 50% regrowing raw materials

German Green Brand Award

Lean & Green Management Award 2022


fischer
fischer

# Innovations to inspire professionals

## Content


| | | | |
|---|---|---|---|
| Products – Detailed overview | 7 | *Chapter* | 1 |
| Pipe clamps | 29 | *Chapter* | 2 |
| Light channel system FLS | 83 | *Chapter* | 3 |
| Channel system Universal FUS | 115 | *Chapter* | 4 |
| Installation grid | 189 | *Chapter* | 5 |
| Fixed point and sliding elements | 199 | *Chapter* | 6 |
| Seismic bracing assortment | 231 | *Chapter* | 7 |
| Airduct and metal roof fixings | 243 | *Chapter* | 8 |
| Accessories | 263 | *Chapter* | 9 |
| Channel system FUS hdg | 303 | *Chapter* | 10 |
| Massive channel system FMS | 373 | *Chapter* | 11 |
| Installation system stainless steel | 433 | *Chapter* | 12 |
| Air conditioner fixings | 485 | *Chapter* | 13 |
| Electrical fixings | 491 | *Chapter* | 14 |
| Sanitary fixings | 535 | *Chapter* | 15 |
| FireStop | 547 | *Chapter* | 16 |
| Basics – good to know | 581 | *Chapter* | 17 |

| Pipe clamps | | Qualification | | | | | Type of pipes | | | Example of pipes | Page |
|---|---|---|---|---|---|---|---|---|---|---|---|
| Type | Image | Fire tested | ETA | VdS-approved | FM-approved | UL | light pipes | medium heavy pipes | heavy pipes | | |
| Hinged pipe clamp FGRS Universal |  | – | – | – | – | – | ● | ○ | – | heating pipes, drinking water and service water pipes, process pipes for gases and liquids | 30 |
| Hinged pipe clamp FGRS |  | – | – | – | – | – | ● | ○ | – | heating pipes, drinking water and service water pipes, medical gas supply | 33 |
| Hinged pipe clamp FKS for plastic pipes |  | – | – | – | – | – | ● | ○ | – | heating pipes, drinking water and service water pipes | 36 |
| Pipe clamp FRS-L Universal |  | ● | – | – | – | – | ○ | ● | – | heating pipes, drinking water and service water pipes, process pipes for gases and liquids | 38 |
| Sliding clamp FKS2 |  | – | – | – | – | – | ○ | ● | – | heating pipes, drinking water and service water pipes, wastewater and rainwater pipes | 40 |
| Pipe clamp FRS Triple |  | – | – | – | – | – | ○ | ● | – | gas and compressed air pipes, process pipes for gases and liquids | 42 |
| Pipe clamp FRS |  | ● | ● | – | – | – | ○ | ● | – | heating pipes, drinking water and service water pipes, process pipes for gases and liquids | 44 |
| Silicone pipe clamp FRSH |  | – | – | – | – | – | ○ | ● | – | steam pipes | 46 |
| Pipe clamp FRSN Triple |  | – | – | – | – | – | ○ | ● | – | gas and compressed air pipes, process pipes for gases and liquids | 48 |
| Pipe clamp FRSN |  | – | – | – | – | – | ○ | ● | – | gas and compressed air pipes, process pipes for gases and liquids | 50 |
| Heavy duty pipe clamp FRSM – inch |  | – | – | – | – | – | – | ● | ○ | heating pipes, process pipes for gases and liquids | 52 |
| Heavy duty pipe clamp FRSM – metric |  | – | – | – | – | – | – | ○ | ● | heating pipes, process pipes for gases and liquids | 54 |
| Heavy duty pipe clamp FRSMN |  | – | – | ● | ● | – | ○ | ● | ● | heating pipes, drinking water and service water pipes, process pipes for gases and liquids, sprinkler pipes | 56 |
| Refrigeration pipe clamp FRSK |  | – | – | – | – | – | ○ | ● | ● | cooling pipes | 59 |
| Refrigeration pipe clamp KFT |  | – | – | – | – | – | – | ● | ○ | cooling pipes | 61 |
| Refrigeration clamp KFS |  | – | – | – | – | – | ○ | ● | ○ | cooling pipes | 64 |
| Sprinkler loop hanger FRSP |  | – | – | – | ● | ● | ○ | ● | ○ | sprinkler pipes | 66 |
| Sprinkler loop hanger FRLH |  | – | – | ● | ● | – | ○ | ● | ○ | sprinkler pipes | 68 |
| Sprinkler loop hanger FCHS |  | – | – | – | ● | ● | ○ | ● | ● | sprinkler pipes | 70 |
| Riser clamp RCWR |  | – | – | – | – | ● | ○ | ● | ○ | riser pipes | 72 |
| U-Clamp FUBD |  | – | – | – | – | – | ● | ○ | – | gas and compressed air pipes, process pipes for gases and liquids | 74 |

○ possible ● recommended – not recommendable

| Pipe clamps | | Qualification | | | | | Type of pipes | | | Example of pipes | Page |
|---|---|---|---|---|---|---|---|---|---|---|---|
| Type | Image | Fire tested | ETA | VdS-approved | FM-approved | UL | light pipes | medium heavy pipes | heavy pipes | | |
| U-bolt ETR |  | – | – | – | – | – | ○ | ● | ○ | sprinkler pipes, gas and compressed air pipes | 76 |
| U-bolt connector FETR-C |  | – | – | – | – | – | ○ | ● | ○ | sprinkler pipes, gas and compressed air pipes | 78 |
| Hose clamp SGS |  | – | – | – | – | – | ● | ○ | – | rubber pipes | 80 |

○ possible ● recommended – not recommendable

| Light channel system FLS | | Qualification | Type of pipes | | | Example of pipes | Page |
|---|---|---|---|---|---|---|---|
| Type | Image | Fire tested | light pipes | medium heavy pipes | heavy pipes | | |
| Channel FLS |  | ● | ● | ○ | – | heating pipes, air ventilation, drinking water and service water pipes, medical gas supply | 84 |
| FLS Cutting Tool |  | – | – | – | – | – | 87 |
| Cantilever arm ALK |  | ● | ● | ○ | – | process pipes for gases and liquids, cable trays | 89 |
| Cover cap AK |  | – | – | – | – | – | 92 |
| Angle brace WS 31– 45° |  | – | ● | ○ | – | heating pipes, drinking water and service water pipes, cable trays | 93 |
| Channel connector SV 31 |  | – | ● | ○ | – | – | 95 |
| Sliding channel nut FSM Clix P |  | ● | ● | ○ | – | heating pipes, drinking water and service water pipes, medical gas supply | 97 |
| Sliding channel nut FSM Clix M |  | ● | ● | ○ | – | heating pipes, drinking water and service water pipes, medical gas supply | 99 |
| T-head bolt FHS Clix |  | ● | ● | ○ | – | heating pipes, drinking water and service water pipes, medical gas supply | 101 |
| Saddle flange SF Clix 31 |  | – | ● | ○ | – | – | 104 |
| Angle bracket MW Clix 90° |  | – | ● | ○ | – | – | 106 |
| Angle bracket MW and MWU |  | – | ● | ○ | – | – | 108 |
| Channel washer HK 31 |  | ● | ● | ○ | – | – | 110 |
| Beam clamp TKR 31 |  | – | ● | ○ | – | – | 111 |

○ possible ● recommended – not recommendable

| Channel system universal FUS | | Qualification | | Type of pipes | | | Example of pipes | Page |
|---|---|---|---|---|---|---|---|---|
| Type | Image | Fire tested | ETA | light pipes | me-dium heavy pipes | heavy pipes | | |
| Channel FUS |  | ● | ● | ○ | ● | ○ | heating pipes, drinking water and service water pipes, gas and compressed air, waste water, process water, cable trays | 116 |
| Channel connector FUF OC and PFUF OC |  | – | – | – | – | – | – | 122 |
| Socket wrench FSK |  | – | – | – | – | – | – | 123 |
| Channel connector FDCC |  | – | – | ○ | ● | ○ | – | 124 |
| Cantilever arm FCA |  | ● | ● | – | ● | ○ | heating pipes, drinking water and service water pipes, gas and compressed air, waste water, process water, cable trays | 126 |
| Large cantilever arm FCAM |  | – | – | – | ● | ● | heating pipes, cooling pipes, process pipes for gases and liquids | 131 |
| Cover cap FEC |  | – | – | – | – | – | – | 133 |
| Push-through connector PFCN |  | – | – | ○ | ● | ○ | – | 134 |
| Saddle flange PSF |  | – | – | ○ | ● | ○ | heating pipes, drinking water and service water pipes, gas and compressed air pipes | 136 |
| Universal bracket PUWS |  | – | – | ○ | ● | ○ | heating pipes, drinking water and service water pipes, gas and compressed air pipes | 138 |
| Angle bracket PWK |  | – | – | ○ | ● | ○ | heating pipes, drinking water and service water pipes, gas and compressed air pipes | 140 |
| Angle bracket fire-tested PUWF |  | ● | – | ○ | ● | ○ | heating pipes, drinking water and service water pipes, process pipes for gases and liquids | 141 |
| Variable bracket PVB |  | – | – | ○ | ● | ○ | – | 145 |
| Bracing elements PSAE |  | – | – | ○ | ● | ○ | – | 146 |
| Bracket PFFF |  | – | – | ○ | ● | ○ | heating pipes, drinking water and service water pipes, gas and compressed air pipes | 148 |
| Bracket PFAF |  | – | – | ○ | ● | ○ | heating pipes, drinking water and service water pipes, gas and compressed air pipes | 149 |
| Bracket PFUF |  | – | – | ○ | ● | ○ | heating pipes, drinking water and service water pipes, gas and compressed air pipes | 151 |
| Bracket PFUF D |  | – | – | ○ | ● | ○ | heating pipes, drinking water and service water pipes, gas and compressed air pipes | 152 |

○ possible ● recommended – not recommendable

1

| Channel system universal FUS | | Qualification | | Type of pipes | | | Example of pipes | Page |
|---|---|---|---|---|---|---|---|---|
| Type | Image | Fire tested | ETA | light pipes | me-dium heavy pipes | heavy pipes | | |
| Channel nut FCN Clix P |  | ● | ● | ○ | ● | ○ | ventilation pipes, gas and compressed air pipes | 154 |
| Channel nut FCN Clix M |  | ● | ● | ● | ● | ○ | ventilation pipes, gas and compressed air pipes | 156 |
| Channel nut FCN |  | – | – | ○ | ● | ○ | ventilation pipes, gas and compressed air pipes | 158 |
| T-head bolt FCN Clix S |  | – | – | ● | ● | ○ | heating pipes, drinking water and service water pipes, process pipes for gases and liquides | 160 |
| T-head bolt FCSN |  | – | – | ○ | ● | ○ | heating pipes, drinking water and service water pipes, medical gas supply | 162 |
| Channel washer HK 41 |  | ● | ● | ○ | ● | ○ | – | 164 |
| Saddle flange SF |  | ● | – | – | ● | ○ | – | 165 |
| Mounting bracket UWS |  | ● | – | – | ● | ○ | – | 167 |
| Angle bracket WK |  | – | – | ○ | ● | ○ | – | 168 |
| Bracket FFF |  | – | – | ○ | ● | ○ | – | 170 |
| Bracket FAF |  | – | – | ○ | ● | ○ | – | 172 |
| Flanges FZF |  | – | – | – | ● | ○ | – | 174 |
| Flange FUF |  | – | – | – | – | – | – | 176 |
| Variable bracket VB |  | – | – | ○ | ● | ○ | – | 178 |
| Bracing bracket FYJB |  | – | – | ● | ● | – | – | 179 |
| Universal hinge FUH |  | – | – | ○ | ● | ○ | – | 180 |

○ possible ● recommended – not recommendable

| Channel system universal FUS | | Qualification | | Type of pipes | | | Example of pipes | Page |
|---|---|---|---|---|---|---|---|---|
| | | Fire tested | ETA | light pipes | me-dium heavy pipes | heavy pipes | | |
| Type | Image | | | | | | | |
| Threaded rod bracket FSB 45° |  | – | – | ○ | ● | ○ | – | 183 |
| Beam clamp TKR |  | – | – | ○ | ● | ○ | – | 184 |
| Beam clamp FHBC hdg |  | – | – | ● | ● | – | drinking water and service water pipes, gas and compressed air pipes, process pipes for gases and liquids, cable trays | 186 |

○ possible ● recommended – not recommendable

| Installation grid | | Type of pipes | | | Example of pipes | Page |
|---|---|---|---|---|---|---|
| Type | Image | light pipes | me-dium heavy pipes | heavy pipes | | |
| Cross connector FVS II |  | – | ● | ○ | ventilation ducts and ventilation pipes, drinking water and service water pipes, gas and compressed air pipes, process pipes for gases and liquids, cable trays | 190 |
| Channel FUS |  | ○ | ● | ○ | heating pipes, drinking water and service water pipes, gas and compressed air pipes | 191 |
| Channel connector FUF OC |  | – | – | – | – | 192 |
| Channel washer HK 41 |  | – | ● | ○ | – | 192 |
| Cover cap FEC |  | ● | ● | ● | – | 192 |
| Channel nut FCN Clix P | 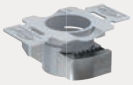 | ○ | ● | ○ | heating pipes, drinking water and service water pipes, gas and compressed air pipes | 193 |
| Channel nut FCN |  | ● | ● | ● | – | 193 |
| Universal hinge FUH |  | – | ● | ○ | – | 193 |
| Turnbuckle SPS, Bolt left-hand/right-hand BLR |  | ● | ● | ● | – | 194 |
| Beam clamp TKR |  | – | ● | ○ | – | 194 |
| Threaded rod G |  | – | – | – | – | 194 |

○ possible ● recommended – not recommendable

| Installation grid | | Type of pipes | | | Example of pipes | Page |
|---|---|---|---|---|---|---|
| Type | Image | light pipes | me-dium heavy pipes | heavy pipes | | |
| Hexagonal screw SKS |  | ● | ● | ● | – | 195 |
| Washer U |  | ○ | ● | ○ | – | 195 |
| Hexagonal nut MU |  | ● | ● | – | ventilation ducts and ventilation pipes, sprinkler pipes, water and waste water treatment | 195 |
| Hexagonal connector VM |  | – | – | – | – | 196 |
| Bracing bracket FYJB |  | ● | ● | ○ | ventilation ducts and spiral ducts, drinking water and service water pipes, gas and compressed air pipes, process pipes for gases and liquids, cable trays | 196 |

○ possible ● recommended – not recommendable

| Fixed points and sliding elements | | Qualification | Type of pipes | | | Example of pipes | Page |
|---|---|---|---|---|---|---|---|
| Type | Image | Fire tested | light pipes | medium heavy pipes | heavy pipes | | |
| Fixed point saddle FFS-M / FFS-M2 |  | – | ○ | ● | ○ | heating pipes, warm water and service water pipes, steam pipes, cooling pipes | 200 |
| Fixed point saddle FFS-H / FFS-H2 |  | – | ○ | ● | ○ | heating pipes, warm water and service water pipes, steam pipes, cooling pipes | 201 |
| Fixed point compact FFP-C |  | – | ● | ○ | - | heating pipes, warm water and service water pipes, steam pipes, cooling pipes | 202 |
| Fixed point light FFP-L / FFP-L2 |  | – | ● | ○ | - | heating pipes, warm water and service water pipes, steam pipes, cooling pipes | 203 |
| Fixed point light FFP-L22 / FFP-L42 |  | – | ● | ○ | - | heating pipes, warm water and service water pipes, steam pipes, cooling pipes | 204 |
| Fixed point medium FFP-M / FFP-M2 |  | – | ○ | ● | ○ | heating pipes, warm water and service water pipes, steam pipes, cooling pipes | 205 |
| Fixed point medium FFP-M22 / -M42 |  | – | ○ | ● | ○ | heating pipes, warm water and service water pipes, steam pipes, cooling pipes | 207 |
| Fixed point medium FFP-MD2 / -MD4 |  | – | ○ | ● | ○ | heating pipes, warm water and service water pipes, steam pipes, cooling pipes | 208 |
| Fixed point heavy FFP-HD22 / FFP-HD42 |  | – | ○ | ○ | ● | heating pipes, warm water and service water pipes, steam pipes, cooling pipes | 209 |
| Fixed point solid clamp FFPC |  | – | ○ | ● | ● | heating pipes, warm water and service water pipes, steam pipes, cooling pipes | 211 |
| Refrigeration fixed point clamp FFRC |  | – | ○ | ● | ● | heating pipes, warm water and service water pipes, steam pipes, cooling pipes | 213 |
| Sound insulated fixed point FSFP |  | – | ○ | ● | ○ | heating pipes, warm water and service water pipes, steam pipes, cooling pipes | 215 |

○ possible ● recommended – not recommendable

| Fixed points and sliding elements | | Qualification | Type of pipes | | | Example of pipes | Page |
|---|---|---|---|---|---|---|---|
| Type | Image | Fire tested | light pipes | medium heavy pipes | heavy pipes | | |
| Axial slider compact FASC |  | – | ● | ○ | - | heating pipes, warm water and service water pipes, steam pipes, cooling pipes | 217 |
| Axial slider light FASL |  | – | ● | ○ | - | heating pipes, warm water and service water pipes, steam pipes, cooling pipes | 219 |
| Axial slider medium FASM |  | ● | ○ | ● | ○ | heating pipes, warm water and service water pipes, steam pipes, cooling pipes | 221 |
| Axial roller slider heavy FASH |  | ● | ○ | ○ | ● | heating pipes, warm water and service water pipes, steam pipes, cooling pipes | 223 |
| Cross slider FCSM |  | – | ○ | ● | ○ | heating pipes, warm water and service water pipes, steam pipes, cooling pipes | 225 |
| Sliding hanger SB |  | ● | ● | ○ | - | heating pipes, warm water and service water pipes, steam pipes, cooling pipes | 227 |
| Pendulum hanger PDH / PDH K |  | ● | ● | ● | ○ | heating pipes, warm water and service water pipes, steam pipes, cooling pipes | 228 |

○ possible ● recommended – not recommendable

| Seismic bracing assortment | | Qualification | Type of pipes | | | Example of pipes | Page |
|---|---|---|---|---|---|---|---|
| Type | Image | FM-approved | light pipes | medium heavy pipes | heavy pipes | | |
| Shaped reinforcement strut SAE |  | – | ○ | ● | – | water pipes plumbing, cooling pipes | 232 |
| Threaded rod brace connector S-VA |  | – | ○ | ● | – | water pipes plumbing, cooling pipes | 233 |
| Channel brace connector S-VB |  | – | ○ | ● | – | water pipes plumbing, cooling pipes | 234 |
| 90° angle connector S-FAF |  | – | ○ | ● | – | water pipes plumbing, cooling pipes | 235 |
| Threaded rod connector S-ROD |  | – | ○ | ● | – | water pipes plumbing, cooling pipes | 236 |
| Rod stiffener FTRC M12 gvz |  | – | ○ | ● | – | water pipes plumbing, cooling pipes | 239 |
| Seismic wire cable system FWI-S |  | – | ● | ● | ○ | ventilation ducts and spiral ducts, drinking water and service water pipes, gas and compressed air pipes, process pipes for gases and liquids, cable trays | 240 |

○ possible ● recommended – not recommendable

| Airduct and metal roof fixings | | Qualification | | | Type of pipes | | | Example of pipes | Page |
|---|---|---|---|---|---|---|---|---|---|
| Type | Image | Fire tested | VdS-approved | FM-approved | light pipes | medium heavy pipes | heavy pipes | | |
| Ventilation duct clamp LGS |  | – | – | – | ● | ○ | – | ventilation pipes | 244 |
| Ventilation duct clamp LGSN |  | – | – | – | ● | ○ | – | ventilation pipes, spiral ducts | 246 |
| Air duct hanger L- and Z-type |  | – | – | – | ● | ○ | – | ventilation pipes | 248 |
| Spiral duct hanger LRBN / LRB |  | – | – | – | ● | ○ | – | ventilation ducts | 250 |
| Ventilation duct connector VDC |  | – | – | – | ● | ○ | - | ventilation ducts | 251 |
| Flat roof base FFRB |  | – | – | – | ● | ● | ○ | ventilation ducts and spiral ducts, heating and cooling pipes, water pipes | 252 |
| Profile hanger TZ / TZA / TZH / TZB / TZR |  | – | ● | ● | ○ | ● | – | ventilation ducts and spiral ducts, sprinkler pipes, water and waste water treatment | 255 |
| Toggle plug KDS |  | – | ● | ● | ○ | ● | – | ventilation ducts and spiral ducts, drinking and service water pipes, gas and compressed air pipes, process pipes for gases and liquids, sprinkler pipes, cable trays | 257 |
| Hole punch LZ, hole stamp LST |  | – | – | – | – | – | – | – | 259 |
| Rubber inlay EMS |  | – | – | – | ● | ○ | – | ventilation ducts and ventilation pipes | 260 |
| Profile connecting screw FPS-FPB |  | – | – | – | ● | ○ | - | ventilation ducts and spiral ducts | 261 |

○ possible ● recommended – not recommendable

1

| Mounting accessories | | Qualification | | | | | Type of pipes | | | Example of pipes | Page |
|---|---|---|---|---|---|---|---|---|---|---|---|
| Type | Image | Fire tested | VdS-approved | ETA | FM-approved | UL-approved | light pipes | medium heavy pipes | heavy pipes | | |
| Beam clamp TKL |  | – | ● | – | ● | ● | ● | ● | – | ventilation ducts and ventilation pipes, sprinkler pipes, water and waste water treatment | 264 |
| Beam clamp TKLS |  | – | ● | – | ● | – | ● | ● | – | ventilation ducts and ventilation pipes, sprinkler pipes, water and waste water treatment | 266 |
| Swivel beam clamp TKLG |  | – | ● | – | ● | – | ● | ● | ● | ventilation ducts and spiral ducts, drinking water and service water pipes, gas and compressed air pipes, process pipes for gases and liquids, sprinkler pipes, cable trays | 268 |
| Threaded rod G |  | – | – | ● | – | – | ● | ● | ● | – | 271 |
| Threaded stud GS |  | – | – | – | – | – | ● | ● | ● | – | 273 |
| Base plates GPL / GPS / GPSR / GPR |  | – | – | – | – | – | ○ | ● | – | ventilation ducts and ventilation pipes, sprinkler pipes, water and waste water treatment | 275 |
| Stud screw STST with TX star recess |  | – | – | – | – | – | – | – | – | – | 277 |
| Support hanger AHB |  | – | – | – | – | – | ● | ● | ● | – | 279 |
| Multi connector MW |  | – | – | – | – | – | ● | – | – | – | 280 |
| Parallel connector PV |  | – | – | – | – | – | ● | ○ | – | – | 281 |
| Double connector plate DPP, DPF |  | – | – | – | – | – | ● | ○ | – | heating pipes, water treatment | 283 |
| Bolt connector SBB |  | – | – | – | – | – | ● | ○ | – | – | 284 |
| Turnbuckle SPS, Bolt left-hand / right-hand BLR |  | – | – | – | – | – | – | ● | ○ | installation grid | 285 |
| Hexagonal screw SKS |  | – | – | – | – | – | ● | ● | – | heating pipes, water and waste water treatment | 286 |
| Cylinder head screw ZKS |  | – | – | – | – | – | ● | ○ | – | – | 287 |
| Washer U |  | – | – | – | – | – | ● | ● | – | – | 288 |

○ possible ● recommended – not recommendable

| Mounting accessories | | Qualification | | | | | Type of pipes | | | Example of pipes | Page |
|---|---|---|---|---|---|---|---|---|---|---|---|
| Type | Image | Fire tested | VdS-approved | ETA | FM-approved | UL-approved | light pipes | medium heavy pipes | heavy pipes | | |
| Hexagonal nut MU |  | – | – | – | – | – | – | – | – | – | 289 |
| Hexagonal connector VM |  | – | – | – | – | – | – | – | – | – | 290 |
| Eyebolt AG |  | – | – | – | – | – | ● | ● | – | – | 291 |
| Thread hanger RAH |  | – | – | – | – | – | ● | ○ | – | – | 292 |
| Reduction piece RD |  | – | – | – | – | – | ● | ● | ○ | – | 293 |
| Reduction socket RDM and GRD |  | – | – | – | – | – | ● | ● | – | – | 294 |
| Flat eye screw LLS |  | – | – | – | – | – | ● | ○ | – | heating pipes, water and waste water treatment, temporary pipes | 295 |
| Textile web strapping GWB |  | – | – | – | – | – | ● | ○ | – | heating pipes, water and waste water treatment, temporary pipes | 296 |
| Perforated steel banding LBV / LBK |  | – | – | – | – | – | ● | – | – | – | 297 |
| Impact nail ED |  | – | – | – | – | – | – | – | – | – | 299 |
| Setting tool |  | – | – | – | – | – | – | – | – | – | 300 |

○ possible ● recommended – not recommendable

1

| Channel system FUS hdg | | Qualification | | | | Type of pipes | | | Example of pipes | Page |
|---|---|---|---|---|---|---|---|---|---|---|
| Type | Image | Fire tested | VdS | FM | UL | light pipes | me-dium heavy pipes | heavy pipes | | |
| Pipe clamp FRS zl |  | – | – | – | – | ○ | ● | – | heating pipes, drinking water and service water pipes, gas and compressed air pipes | 304 |
| Heavy duty pipe clamp FRSM hdg - metric |  | – | – | – | – | ○ | ● | ○ | heating pipes, process pipes for gases and liquids | 306 |
| Channel system FUS hdg |  | ● | – | – | – | – | ● | ○ | heating pipes, drinking water and service water pipes, gas and compressed air, waste water, process water, cable trays | 308 |
| Channel connector FUF OC hdg / PFUF OC zl |  | – | – | – | – | ○ | ● | ○ | heating pipes, drinking water and service water pipes, gas and compressed air pipes | 313 |
| Socket wrench FSK |  | – | – | – | – | – | – | – | – | 314 |
| Channel connector FDCC zl |  | – | – | – | – | ○ | ● | ○ | heating pipes, drinking water and service water pipes, gas and compressed air, waste water, process water, cable trays | 315 |
| Cantilever arm FCA hdg |  | ● | – | – | – | ○ | ● | ○ | – | 317 |
| Large cantilever arm FCAM hdg |  | – | – | – | – | – | ● | ● | – | 320 |
| Cover cap FEC 22 |  | – | – | – | – | ● | ● | ● | – | 322 |
| Push-through connector PFCN 41 zl |  | – | – | – | – | ○ | ● | ○ | – | 323 |
| Saddle flange PSF zl |  | – | – | – | – | ○ | ● | ○ | heating pipes, drinking water and service water pipes, gas and compressed air pipes | 325 |
| Universal bracket PUWS zl |  | – | – | – | – | ○ | ● | ○ | heating pipes, drinking water and service water pipes, gas and compressed air pipes | 327 |
| Angle bracket PWK zl |  | – | – | – | – | ○ | ● | ○ | heating pipes, drinking water and service water pipes, gas and compressed air pipes | 329 |
| Variable bracket PVB zl |  | – | – | – | – | ○ | ● | ○ | – | 330 |
| Bracing elements PSAE zl |  | – | – | – | – | ○ | ● | ○ | – | 251 |
| Bracket PFFF zl |  | – | – | – | – | ○ | ● | ○ | heating pipes, drinking water and service water pipes, gas and compressed air pipes | 331 |
| Bracket PFAF zl |  | – | – | – | – | ○ | ● | ○ | heating pipes, drinking water and service water pipes, gas and compressed air pipes | 333 |
| Bracket PFUF zl |  | – | – | – | – | ○ | ● | ○ | heating pipes, drinking water and service water pipes, gas and compressed air pipes | 334 |
| Brackets PFUF D zl |  | – | – | – | – | ○ | ● | ○ | heating pipes, drinking water and service water pipes, gas and compressed air pipes | 336 |

| Channel system FUS hdg | | Qualification | | | | Type of pipes | | | Example of pipes | Page |
|---|---|---|---|---|---|---|---|---|---|---|
| | | Fire tested | VdS | FM | UL | light pipes | me-dium heavy pipes | heavy pipes | | |
| Type | Image | | | | | | | | | |
| Channel nut FCN Clix P hdg |  | ● | – | – | – | – | ● | ○ | – | 339 |
| Channel nut FCN Clix M hdg |  | ● | – | – | – | – | ● | ○ | – | 341 |
| Channel nut FCN 16 hdg |  | ● | – | – | – | – | ● | ○ | – | 343 |
| Channel washer HK 41 hdg |  | ● | – | – | – | ○ | ● | ○ | – | 345 |
| Saddle flange SF hdg |  | ● | – | – | – | – | ● | ○ | – | 346 |
| Mounting bracket UWS hdg |  | ● | – | – | – | – | ● | ○ | – | 348 |
| Angle bracket WK hdg |  | – | – | – | – | ○ | ● | ○ | heating pipes, drinking water and service water pipes, gas and compressed air pipes | 349 |
| Bracket FFF hdg |  | – | – | – | – | ○ | ● | ○ | – | 351 |
| Bracket FAF hdg |  | – | – | – | – | ○ | ● | ○ | – | 353 |
| Bracket FUF 21 / 41 / 62 hdg |  | – | – | – | – | ○ | ● | ○ | – | 355 |
| Bracket FUF 180° hdg |  | – | – | – | – | ○ | ● | ○ | – | 356 |
| Variable bracket VB hdg |  | – | – | – | – | – | ● | ○ | – | 358 |
| Universal hinge FUH hdg 60 |  | – | – | – | – | – | – | – | – | 359 |
| Threaded rod bracket FSB 45° hdg |  | – | – | – | – | ○ | ● | ○ | – | 361 |
| Beam clamp TKR hdg |  | – | – | – | – | – | – | – | – | 362 |
| Beam clamp TKL hdg |  | – | ● | ● | ● | ● | ● | – | ventilation ducts and ventilation pipes, sprinkler pipes, water and waste water treatment | 364 |
| Beam clamp FHBC hdg |  | – | – | – | – | – | – | – | – | 366 |
| Threaded rod G hdg |  | – | – | – | – | ● | ● | ● | – | 368 |
| Hexagonal screw SKS hdg |  | – | – | – | – | ● | ● | ○ | – | 368 |
| Washer U hdg |  | – | – | – | – | ● | ● | – | – | 369 |
| Hexagonal nut MU hdg |  | – | – | – | – | ● | ● | – | – | 370 |

○ possible ● recommended – not recommendable

1

| Massive channel system FMS | | Qualification | Type of pipes | | | Example of pipes | Page |
|---|---|---|---|---|---|---|---|
| | | Fire tested | light pipes | medium heavy pipes | heavy pipes | | |
| Type | Image | | | | | | |
| Massive profile FMP |  | – | – | – | ● | heating, cooling, steam and process pipes, as well as cable trays | 374 |
| Channel connector FMPC |  | – | – | – | ● | – | 379 |
| Cantilever FMC |  | – | – | – | ● | different pipes and cable trays | 381 |
| Endcap FMEC |  | – | – | – | ● | – | 384 |
| Hammer-head push connector FMHB |  | – | – | – | ● | – | 385 |
| Internal thread connector FMHI |  | – | – | – | – | – | 387 |
| Transportation connector FMTC 90 |  | – | – | – | – | – | 389 |
| Connecting element FMCE |  | – | – | – | ● | all pipelines using standard two screwed pipe clamps | 391 |
| Connecting element FMCE-L |  | – | – | – | ● | all pipes fixed without insulation by U-bolt | 393 |
| Saddle flange FMSF |  | – | – | – | ● | – | 395 |
| Base plate FMSF BP |  | – | – | – | ● | – | 398 |
| Angle bracket FMASF 90 |  | – | – | – | – | – | 399 |
| Variable bracket FMVB |  | – | – | – | ● | – | 401 |
| Beam clamp FMBC |  | – | – | – | ● | – | 403 |
| Beam clamp FMBC M12 and M16 |  | – | – | – | ● | – | 405 |
| Flat fitting FMFF 90° |  | – | – | – | ● | – | 407 |
| Mounting angle FMA 3 and FMA 4 |  | – | – | – | ● | – | 409 |

○ possible ● recommended – not recommendable

| Massive channel system FMS | | Qualification | Type of pipes | | | Example of pipes | Page |
|---|---|---|---|---|---|---|---|
| | | Fire tested | light pipes | medium heavy pipes | heavy pipes | | |
| Type | Image | | | | | | |
| Mounting angle FMA |  | – | – | – | ● | – | 411 |
| System connector FMA-FUS |  | – | – | – | – | – | 413 |
| Connecting element FMUF |  | – | – | – | ● | – | 415 |
| Fix point U-bolt FMFS UB |  | – | – | – | ● | – | 417 |
| Pipe shoe sliding element FMFS |  | – | – | – | ● | heating, cooling, steam pipes and all pipes which have elongation | 419 |
| Fix-point U-bolt FMFS S and M |  | – | – | – | ● | heating, cooling, steam pipes and all pipes which have elongation | 421 |
| Pipe shoes FMPS |  | – | – | – | ● | heating, cooling, steam pipes and all pipes which have elongation | 423 |
| Massive pipe clamp FMFSC |  | – | – | – | ● | – | 427 |
| Massive U-bolt FMPSU |  | – | – | – | ● | – | 429 |

○ possible ● recommended – not recommendable

| Air conditioner fixings oduct | | Applications | Page |
|---|---|---|---|
| Type | Image | | |
| Air conditioner fixing MCE |  | air conditioner on wall | 486 |
| Air conditioner fixing KSU |  | air conditioner on wall | 488 |

1

| Installation system stainless steel | | Qualification | | | | Type of pipes | | | Example of pipes | Page |
|---|---|---|---|---|---|---|---|---|---|---|
| Type | Image | Fire tested | ETA | VdS | FM | light pipes | me-dium heavy pipes | heavy pipes | | |
| Pipe clamp FRS A2/A4 |  | – | – | – | – | ○ | ● | – | heating pipes, drinking water and service water pipes, medical gas supply | 434 |
| Heavy duty pipe clamp FRSM A4 - metric |  | – | – | – | – | – | ● | ○ | heating pipes, process pipes for gases and liquids | 436 |
| Channel FUS A2/A4 |  | ● | – | – | – | ○ | ● | ○ | heating pipes, drinking water and service water pipes, gas and compressed air, waste water, process water, cable trays | 438 |
| Cover cap FEC |  | – | – | – | – | – | – | – | – | 441 |
| Channel connector PFUF OC A4 |  | – | – | – | – | ○ | ● | ○ | heating pipes, drinking water and service water pipes, gas and compressed air, waste water, process water, cable trays | 442 |
| Socket wrench FSK | 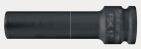 | – | – | – | – | – | – | – | – | 443 |
| Cantilever arm FCA A4 |  | ● | – | – | – | ○ | ● | ○ | heating pipes, drinking water and service water pipes, gas and compressed air, waste water, process water, cable trays | 444 |
| Channel connector FDCC A4 |  | – | – | – | – | – | – | – | – | 445 |
| Push-through connector PFCN A4 |  | – | – | – | – | ○ | ● | ○ | – | 447 |
| Saddle flange PSF A4 |  | – | – | – | – | ○ | ● | ○ | heating pipes, drinking water and service water pipes, gas and compressed air, waste water, process water, cable trays | 449 |
| Universal bracket PUWS A4 |  | – | – | – | – | ○ | ● | ○ | heating pipes, drinking water and service water pipes, gas and compressed air, waste water, process water, cable trays | 450 |
| Angle bracket PWK A4 |  | – | – | – | – | ○ | ● | ○ | heating pipes, drinking water and service water pipes, gas and compressed air, waste water, process water, cable trays | 452 |
| Variable bracket PVB A4 |  | – | – | – | – | ○ | ● | ○ | heating pipes, drinking water and service water pipes, gas and compressed air, waste water, process water, cable trays | 453 |
| Bracing elements PSAE A4 |  | – | – | – | – | ○ | ● | ○ | – | 454 |
| Bracket PFFF A4 |  | – | – | – | – | ○ | ● | ○ | heating pipes, drinking water and service water pipes, gas and compressed air, waste water, process water, cable trays | 456 |
| Bracket PFAF A4 |  | – | – | – | – | ○ | ● | ○ | heating pipes, drinking water and service water pipes, gas and compressed air, waste water, process water, cable trays | 457 |
| Bracket PFUF A4 |  | – | – | – | – | ○ | ● | ○ | heating pipes, drinking water and service water pipes, gas and compressed air, waste water, process water, cable trays | 459 |
| Bracket PFUF D A4 |  | – | – | – | – | ○ | ● | ○ | heating pipes, drinking water and service water pipes, gas and compressed air, waste water, process water, cable trays | 460 |

○ possible ● recommended – not recommendable

| Installation system stainless steel | | Qualification | | | | Type of pipes | | | Example of pipes | Page |
|---|---|---|---|---|---|---|---|---|---|---|
| Type | Image | Fire tested | ETA | VdS | FM | light pipes | me-dium heavy pipes | heavy pipes | | |
| Channel nut FCN Clix P A4 |  | ● | – | – | – | ○ | ● | ○ | heating pipes, drinking water and service water pipes, gas and compressed air, waste water, process water, cable trays | 462 |
| Channel nut FCN Clix M A4 |  | ● | – | – | – | ○ | ● | ○ | heating pipes, drinking water and service water pipes, gas and compressed air, waste water, process water, cable trays | 464 |
| Channel nut FCN A4 |  | – | – | – | – | ○ | ● | ○ | heating pipes, drinking water and service water pipes, gas and compressed air, waste water, process water, cable trays | 466 |
| Saddle flange SF L 41 A4 |  | ● | – | – | – | ○ | ● | ○ | heating pipes, drinking water and service water pipes, gas and compressed air, waste water, process water, cable trays | 468 |
| Bracket FAF A4 |  | – | – | – | – | ○ | ● | ○ | heating pipes, drinking water and service water pipes, gas and compressed air, waste water, process water, cable trays | 469 |
| Variable bracket VB A4 |  | – | – | – | – | ○ | ● | ○ | heating pipes, drinking water and service water pipes, gas and compressed air, waste water, process water, cable trays | 470 |
| Channel washer HK 41 A4 | 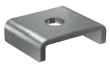 | ● | – | – | – | ○ | ● | ○ | – | 471 |
| Beam clamp TKR A4 |  | – | – | – | – | ○ | ● | ○ | – | 472 |
| Beam clamp TKL A4 |  | – | – | – | – | ○ | ● | ○ | – | 474 |
| Beam clamp TKLS A4 |  | – | – | ● | ● | ● | ● | – | ventilation ducts and spiral ducts, sprink-ler pipes, water and waste water pipes | 475 |
| Threaded rod G A2/A4 |  | – | – | – | – | ● | ● | ● | – | 476 |
| Threaded stud GS A4 |  | – | – | – | – | ● | ● | ● | – | 477 |
| Hexagonal screw SKS A4 |  | – | – | – | – | ● | ● | – | – | 478 |
| Washer U A4 |  | – | – | – | – | ● | ● | – | – | 479 |
| Hexagonal nut MU A4 |  | – | – | – | – | ● | ● | ● | – | 480 |
| Hexagonal connector VM A4 |  | – | – | – | – | ● | ● | ○ | – | 481 |
| Stud screw STS A2/A4 |  | – | – | – | – | ● | ● | ○ | – | 482 |

○ possible ● recommended – not recommendable



# 2
# Pipe clamps




SINGLE SCREW PIPE CLAMPS

| | | |
|---|---|---|
| Hinged pipe clamp FGRS Universal | 30 |  |
| Hinged pipe clamp FGRS | 33 |  |
| Hinged pipe clamp FKS for plastic pipes | 36 |  |

TWO SCREW PIPE CLAMPS

| | | |
|---|---|---|
| Pipe clamp FRS-L Universal | 38 |  |
| Sliding clamp FKS2 | 40 |  |
| Pipe clamp FRS Triple | 42 |  |
| Pipe clamp FRS | 44 |  |
| Silicone pipe clamp FRSH | 46 |  |
| Pipe clamp FRSN Triple | 48 |  |
| Pipe clamp FRSN | 50 |  |

HEAVY DUTY PIPE CLAMPS

| | | |
|---|---|---|
| Heavy duty pipe clamp FRSM - inch | 52 |  |
| Heavy duty pipe clamp FRSM - metric | 54 |  |
| Heavy duty pipe clamp FRSMN | 56 |  |

INSULATED PIPE CLAMPS

| | | |
|---|---|---|
| Refrigeration pipe clamp FRSK | 59 |  |
| Refrigeration pipe clamp KFT | 61 |  |
| Refrigeration clamp KFS | 64 |  |

SPRINKLER CLAMPS

| | | |
|---|---|---|
| Sprinkler loop hanger FRSP | 66 |  |
| Sprinkler loop hanger FRLH | 68 |  |
| Sprinkler loop hanger FCHS | 70 |  |
| Riser clamp RCWR | 72 |  |

OTHERS

| | | |
|---|---|---|
| U-Clamp FUBD | 74 |  |
| U-Bolt ETR | 76 |  |
| U-Bolt connector FETR-C | 78 |  |
| Hose clamp SGS | 80 |  |

# Hinged pipe clamp FGRS Universal

The hinged pipe clamp with the convenient and secure quick-release fastener







Pipelines on cantilevers

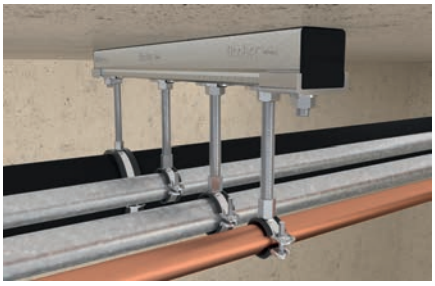

Light, suspended pipelines

## Applications

- Time-saving fixing of pipelines up to 4“ with threaded rods or hanger bolts
- For use in dry interior areas.

## Certificates

## Advantages

- The sound insulation test report guarantees objectively tested functional safety.
- The complete and gapless diameter clamping range allows the fastening of any pipe size.
- The unique rapid-locking mechanism with all-round edge enables safe and convenient installation.
- The clamp band with crimped edges gives the sound insulation insert a tight fit and simplifies the pipe adjustment.
- The compact design of the pipe clamp allows simple, subsequent insulation.
- The combination torx-slot thread of the screw increases flexibility during assembly.

## Properties

- Material: steel DC01 (material no. 1.0330) in accordance with DIN EN 10130
- Zinc plating: electro zinc-plated
- Connecting nut: resistance welded, size 13
- Screw plug: panhead screw with slot/TX combination (M5=TX25, M6=TX30)
- Sound insulating insert material SBR/EPDM; chlorine-free, silicone-free
- Hardness: 55 ± 5° Shore A
- Temperature range: -40 °C to +100 °C
- Fire behavior: DIN 4102: Class B2

## Installation FGRS Universal

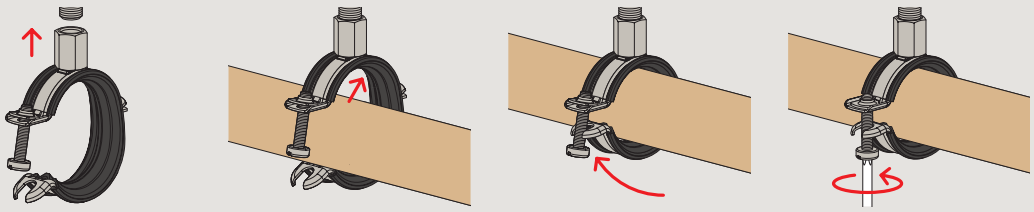

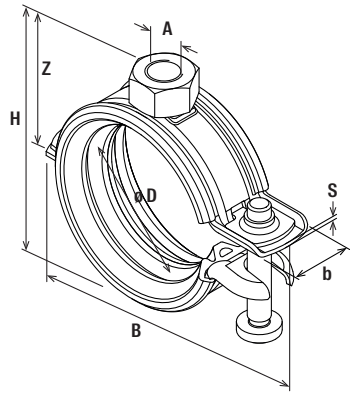


FGRS Universal

## Technical data

| Item | Item no. | Thread A | Size [in] | Clamping range D [mm] | Width B [mm] | Height H [mm] | Height Z [mm] | Width x thickness clamp band b x s [mm] | Locking screw | Installation torque $T_{inst}$ [Nm] | Max. re-com. static load (centr. tension) $N_{rec}$ [kN] | Sales unit [pcs] |
|---|---|---|---|---|---|---|---|---|---|---|---|---|
| **FGRS Universal M8 12 - 15** | **562340** | M8 | 1/4 | 12 - 15 | 43.6 | 43.6 | 19.5 | 18 x 1.0 | M5 | 2 | 0.65 | 25 |
| **FGRS Universal M8 15 - 19** | **562341** | M8 | 3/8 | 15 - 19 | 48 | 48 | 21.5 | 18 x 1.0 | M5 | 2 | 0.65 | 25 |
| **FGRS Universal M8 20 - 24** | **562342** | M8 | 1/2 | 20 - 24 | 52.3 | 52.3 | 23.5 | 18 x 1.0 | M5 | 2 | 0.65 | 25 |
| **FGRS Universal M8 25 - 30** | **562343** | M8 | 3/4 | 25 - 30 | 57.5 | 57.5 | 26 | 18 x 1.0 | M5 | 2 | 0.65 | 25 |
| **FGRS Universal M8 31 - 37** | **562344** | M8 | 1 | 31 - 37 | 65.5 | 65.5 | 29.9 | 18 x 1.0 | M5 | 2 | 0.65 | 25 |
| **FGRS Universal M8 38 - 45** | **562345** | M8 | 1 1/4 | 38 - 45 | 73 | 73 | 33.4 | 18 x 1.2 | M5 | 2 | 0.90 | 25 |
| **FGRS Universal M8 46 - 52** | **562346** | M8 | 1 1/2 | 46 - 52 | 80.1 | 80.1 | 36.9 | 18 x 1.2 | M5 | 2 | 0.90 | 25 |
| **FGRS Universal M8 53 - 59** | **562347** | M8 | – | 53 - 59 | 87.3 | 87.3 | 40.4 | 18 x 1.2 | M5 | 2 | 0.90 | 25 |
| **FGRS Universal M8 60 - 66** | **562348** | M8 | 2 | 60 - 66 | 93.8 | 93.8 | 43.9 | 18 x 1.2 | M5 | 2 | 0.90 | 10 |

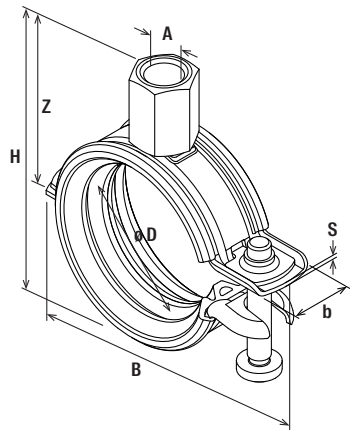


FGRS Universal M8/M10

## Technical data

| Item | Item no. | Thread A | Size [in] | Clamping range D [mm] | Width B [mm] | Height H [mm] | Height Z [mm] | Width x thickness clamp band b x s [mm] | Locking screw | Installation torque $T_{inst}$ [Nm] | Max. re-com. static load (centr. tension) $N_{rec}$ [kN] | Sales unit [pcs] |
|---|---|---|---|---|---|---|---|---|---|---|---|---|
| **FGRS Universal M8/10 12 - 15** | **562349** | M8 / M10 | 1/4 | 12 - 15 | 43.6 | 43.3 | 30 | 18 x 1.0 | M5 | 2 | 0.65 | 25 |
| **FGRS Universal M8/10 15 - 19** | **562350** | M8 / M10 | 3/8 | 15 - 19 | 48 | 47.3 | 32 | 18 x 1.0 | M5 | 2 | 0.65 | 25 |
| **FGRS Universal M8/10 20 - 24** | **562351** | M8 / M10 | 1/2 | 20 - 24 | 52.3 | 51.3 | 34 | 18 x 1.0 | M5 | 2 | 0.65 | 25 |
| **FGRS Universal M8/10 25 - 30** | **562352** | M8 / M10 | 3/4 | 25 - 30 | 57.5 | 56.3 | 36.5 | 18 x 1.0 | M5 | 2 | 0.65 | 25 |

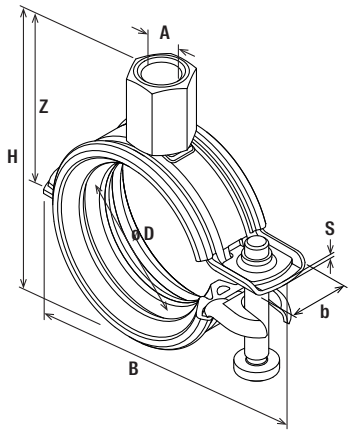


FGRS Universal M8/M10

## Technical data

| Item | Item no. | Thread A | Size [in] | Clamping range D [mm] | Width B [mm] | Height H [mm] | Height Z [mm] | Width x thickness clamp band b x s [mm] | Locking screw | Installation torque $T_{inst}$ [Nm] | Max. recom. static load (centr. tension) $N_{rec}$ [kN] | Sales unit [pcs] |
|---|---|---|---|---|---|---|---|---|---|---|---|---|
| **FGRS Universal M8/10 31 - 37** | **562353** | M8 / M10 | 1 | 31 - 37 | 65.5 | 64 | 40.4 | 18 x 1.0 | M5 | 2 | 0.65 | 25 |
| **FGRS Universal M8/10 38 - 45** | **562354** | M8 / M10 | 1 1/4 | 38 - 45 | 73 | 71.2 | 43.9 | 18 x 1.2 | M5 | 2 | 0.90 | 25 |
| **FGRS Universal M8/10 46 - 52** | **562355** | M8 / M10 | 1 1/2 | 46 - 52 | 80.1 | 78.2 | 47.4 | 18 x 1.2 | M5 | 2 | 0.90 | 25 |
| **FGRS Universal M8/10 53 - 59** | **562356** | M8 / M10 | – | 53 - 59 | 87.3 | 85.2 | 50.9 | 18 x 1.2 | M5 | 2 | 0.90 | 25 |
| **FGRS Universal M8/10 60 - 66** | **562357** | M8 / M10 | 2 | 60 - 66 | 93.8 | 92.2 | 54.4 | 18 x 1.2 | M5 | 2 | 0.90 | 10 |
| **FGRS Universal M8/10 73 - 80** | **562456** | M8 / M10 | – | 73 - 80 | 111.9 | 107.8 | 62.4 | 20 x 1.8 | M6 | 2 | 1.30 | 10 |
| **FGRS Universal M8/10 83 - 90** | **562457** | M8 / M10 | 3 | 83 - 90 | 123.3 | 119.2 | 68.1 | 20 x 1.8 | M6 | 2 | 1.30 | 10 |
| **FGRS Universal M8/10 95 - 103** | **562458** | M8 / M10 | – | 95 - 103 | 134.2 | 130.2 | 73.6 | 20 x 1.8 | M6 | 2 | 1.30 | 10 |
| **FGRS Universal M8/10 108 - 115** | **562459** | M8 / M10 | 4 | 108 - 115 | 147.5 | 143.7 | 80.3 | 20 x 1.8 | M6 | 2 | 1.30 | 10 |

# Hinged pipe clamp FGRS

The one-piece hinged pipe clamp with floating single screw



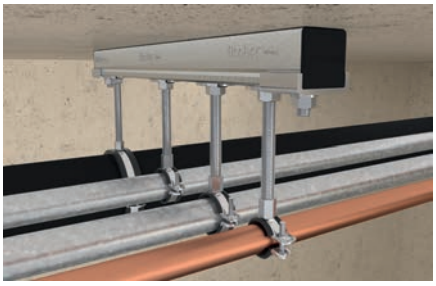

Light, suspended pipelines



Pipelines on cantilevers



## Applications

- For economical fixing of pipes up to Ø2“ with threaded rods or stud screws.
- For use in dry interior areas.

## Advantages

- The floating single screw allows a simple, one-handed installation.
- The compact construction of the pipe clamp enables a simple post-installation insulation.
- The screw‘s design stops it falling out during the installation.

## Properties

- Material: steel DD11 (material no. 1.0332) acc. to DIN EN 10111
- Zinc plating: electro zinc-plated
- Connecting nut: resistance welded, M8, SW 13
- Locking screw: flat head screw with combination recessed head
- Material sound insulation insert: EPDM; chlorine-free; silicone-free
- Sound insulation: for DIN 4109
- Temperature range: -40 °C to +100 °C
- Hardness: 55 ± 5° Shore A
- Fire behaviour: DIN 4102: Class B2

## Installation FGRS

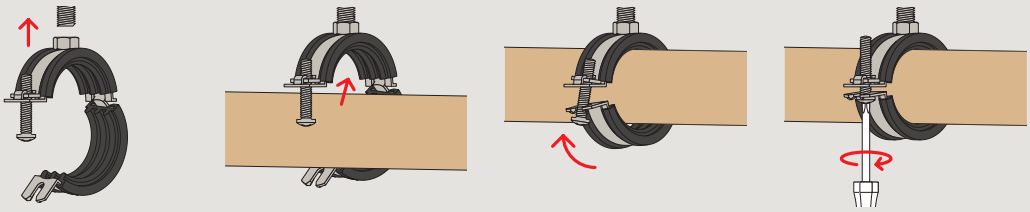

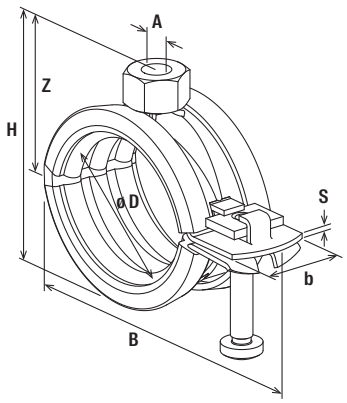


FGRS

## Technical data

| | Item no. | Thread A | Size [in] | Clamping range D [mm] | Width B [mm] | Height H [mm] | Height Z [mm] | Width x thickness clamp band b x s [mm] | Locking screw | Installation torque $T_{inst}$ [Nm] | Max. re-com. static load (centr. tension) $N_{rec}$ [kN] | Sales unit [pcs] |
|---|---|---|---|---|---|---|---|---|---|---|---|---|
| **Item** | | | | | | | | | | | | |
| **FGRS 8 - 11** | **537212** | M8 | – | 8 - 11 | 45 | 29 | 17 | 20 x 1.25 | M5 | 2 | 0.80 | 100 |
| **FGRS 12 - 14** | **079420** | M8 | 1/4 | 12 - 14 | 48 | 31 | 21 | 20 x 1.25 | M5 | 2 | 0.80 | 100 |
| **FGRS 15 - 19** | **079421** | M8 | 3/8 | 15 - 19 | 52 | 36 | 24 | 20 x 1.25 | M5 | 2 | 0.80 | 100 |
| **FGRS 20 - 24** | **079422** | M8 | 1/2 | 20 - 24 | 58 | 41 | 26 | 20 x 1.25 | M5 | 2 | 0.80 | 100 |
| **FGRS 25 - 30** | **079423** | M8 | 3/4 | 25 - 30 | 63 | 47 | 28 | 20 x 1.25 | M5 | 2 | 0.80 | 100 |
| **FGRS 32 - 37** | **079424** | M8 | 1 | 32 - 37 | 72 | 54 | 32 | 20 x 1.25 | M5 | 2 | 0.80 | 100 |
| **FGRS 40 - 44** | **079425** | M8 | 1 1/4 | 40 - 44 | 79 | 61 | 37 | 20 x 1.5 | M5 | 2 | 0.90 | 50 |
| **FGRS 45 - 50** | **079426** | M8 | 1 1/2 | 45 - 50 | 88 | 67 | 42 | 20 x 1.5 | M5 | 2 | 0.90 | 50 |
| **FGRS 50 - 55** | **079427** | M8 | – | 50 - 55 | 94 | 72 | 45 | 20 x 1.5 | M5 | 2 | 0.90 | 50 |
| **FGRS 56 - 63** | **079428** | M8 | 2 | 56 - 63 | 99 | 80 | 46 | 20 x 1.5 | M5 | 2 | 0.90 | 50 |

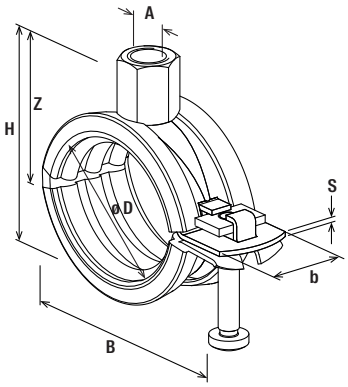


FGRS M8/M10

## Technical data

| | Item no. | Thread A | Size [in] | Clamping range D [mm] | Width B [mm] | Height H [mm] | Height Z [mm] | Width x thickness clamp band b x s [mm] | Locking screw | Installation torque $T_{inst}$ [Nm] | Max. re-com. static load (centr. tension) $N_{rec}$ [kN] | Sales unit [pcs] |
|---|---|---|---|---|---|---|---|---|---|---|---|---|
| **Item** | | | | | | | | | | | | |
| **FGRS 12-14 M8/M10** | **512645** | M8 / M10 | 1/4 | 12 - 14 | 48 | 38 | 26 | 20 x 1.25 | M5 | 2 | 0.80 | 100 |
| **FGRS 15-19 M8/M10** | **512646** | M8 / M10 | 3/8 | 15 - 19 | 52 | 42 | 28 | 20 x 1.25 | M5 | 2 | 0.80 | 100 |
| **FGRS 20-24 M8/M10** | **512647** | M8 / M10 | 1/2 | 20 - 24 | 58 | 46 | 30 | 20 x 1.25 | M5 | 2 | 0.80 | 100 |
| **FGRS 25-30 M8/M10** | **512648** | M8 / M10 | 3/4 | 25 - 30 | 63 | 51 | 33 | 20 x 1.25 | M5 | 2 | 0.80 | 100 |
| **FGRS 32-37 M8/M10** | **512649** | M8 / M10 | 1 | 32 - 37 | 72 | 58 | 36 | 20 x 1.25 | M5 | 2 | 0.80 | 100 |

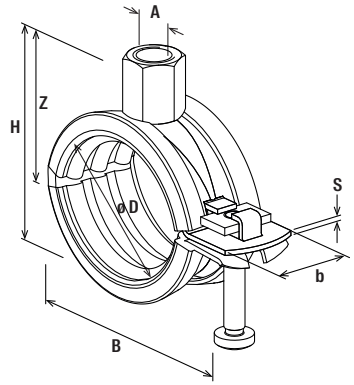


FGRS M8/M10

## Technical data

| Item | Item no. | Thread A | Size [in] | Clamping range D [mm] | Width B [mm] | Height H [mm] | Height Z [mm] | Width x thickness clamp band b x s [mm] | Locking screw | Installation torque $T_{inst}$ [Nm] | Max. re-com. static load (centr. tension) $N_{rec}$ [kN] | Sales unit [pcs] |
|---|---|---|---|---|---|---|---|---|---|---|---|---|
| **FGRS 40-44 M8/M10** | **512650** | M8 / M10 | 1 1/4 | 40 - 44 | 79 | 66 | 40 | 20 x 1.5 | M5 | 2 | 0.90 | 50 |
| **FGRS 45-50 M8/M10** | **512651** | M8 / M10 | 1 1/2 | 45 - 50 | 88 | 71 | 43 | 20 x 1.5 | M5 | 2 | 0.90 | 50 |
| **FGRS 50-55 M8/M10** | **568671** | M8 / M10 | – | 50 - 55 | 94 | 79 | 45 | 20 x 1.5 | M5 | 2 | 0.90 | 50 |
| **FGRS 56-63 M8/M10** | **512652** | M8 / M10 | 2 | 56 - 63 | 99 | 82 | 48 | 20 x 1.5 | M5 | 2 | 0.90 | 50 |

# Hinged pipe clamp FKS for plastic pipes

The one-screw hinged pipe clamp with quick-release fastener for plastic and metal composite pipes



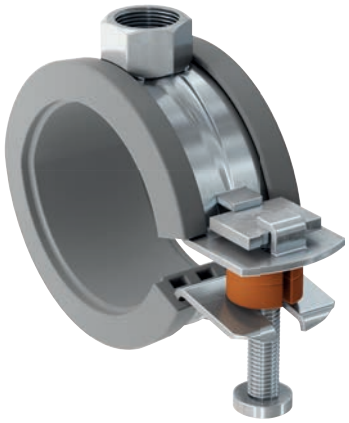



Pipelines

## Applications

- Time-saving fixing for plastic and metal composite pipes using threaded rods or stud screws.
- Can be used as a slide bracket with spacers or as a fixed point clamp by removing the spacers.
- For use in dry interior areas.

## Advantages

- The quick-release fastener allows a fast and time-saving installation.
- The spacing sleeves on the locking screw stops over tightening of the pipes.
- The tight fit of the sound insulation insert prevents it from falling out when inserting the pipe.
- The compact construction of the hinged pipe clamp enables a simple post-installation insulation.
- The screw‘s design stops it falling out during the installation.

## Properties

- Material: steel DD11 (material no. 1.0332) acc. to DIN EN 10111
- Zinc plating: electro zinc-plated
- Connecting nut: resistance welded, M8, SW 13
- Locking screw: flat head screw with combination recessed head
- Material sound insulation insert:: NR/SBR/EPDM; chlorine-free; silicone-free
- Sound insulation: for DIN 4109
- Temperature range: -40 °C to +110 °C
- Hardness: 60 ± 5° Shore A
- Fire behaviour: DIN 4102: Class B2

## Installation FKS

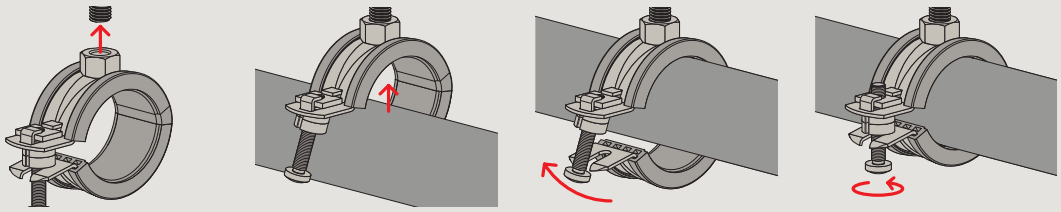

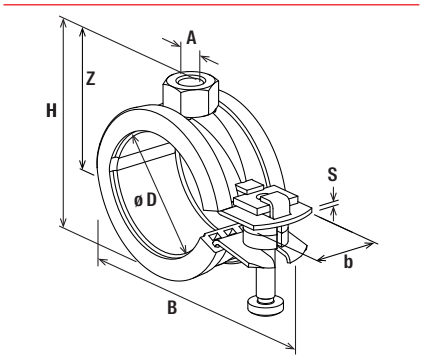


FKS

## Technical data

| Item | Item no. | Thread A | Size [in] | Clamping range D [mm] | Width B [mm] | Height H [mm] | Height Z [mm] | Locking screw | Installation torque $T_{inst}$ [Nm] | Max. recom. static load (centr. tension) $N_{rec}$ [kN] | Sales unit [pcs] |
|---|---|---|---|---|---|---|---|---|---|---|---|
| **FKS 15 - 19** | **562609** | M8 | 3/8 | 15 - 19 | 51 | 35 | 21 | M5 | 2 | 0.80 | 100 |
| **FKS 20 - 24** | **562610** | M8 | 1/2 | 20 - 24 | 56 | 39 | 23 | M5 | 2 | 0.80 | 100 |
| **FKS 25 - 30** | **562611** | M8 | 3/4 | 25 - 30 | 63 | 44 | 26 | M5 | 2 | 0.80 | 100 |
| **FKS 32 - 37** | **562612** | M8 | 1 | 32 - 37 | 71 | 51 | 29 | M5 | 2 | 0.80 | 100 |
| **FKS 40 - 44** | **562613** | M8 | 1 1/4 | 40 - 44 | 78 | 59 | 33 | M5 | 2 | 0.90 | 50 |
| **FKS 45 - 50** | **562614** | M8 | 1 1/2 | 45 - 50 | 86 | 64 | 36 | M5 | 2 | 0.90 | 50 |
| **FKS 50 - 55** | **562615** | M8 | – | 50 - 55 | 91 | 67 | 37 | M5 | 2 | 0.90 | 50 |
| **FKS 56 - 63** | **562616** | M8 | 2 | 56 - 63 | 99 | 75 | 41 | M5 | 2 | 0.90 | 50 |

Note on the clamping range: For the function as a sliding clamp, the lower clamping range specification is valid, e.g. for the FKS 50-55 this is 50mm!

# Pipe clamp FRS-L Universal

The light two-screw pipe clamp with a rapid locking mechanism and combination connection nut







Cantilever construction with channel

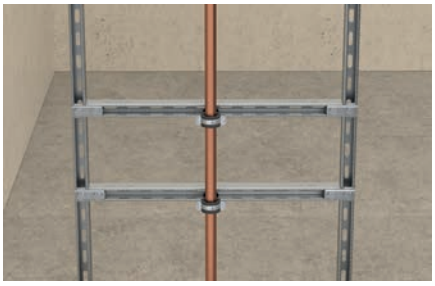

Vertical installation

## Applications

- For simple and easy fixing for pipes using threaded rods or stud screws.
- For use in dry interior areas.

## Certificates

R 120

R 30 MLAR

## Advantages

- The fire inspection report and the sound insulation report guarantee objectively tested functional safety.
- The unique rapid-locking mechanism with crimped edges allows a secure and time-saving installation.
- The clamp band with crimped edges gives a tight fit of the sound insulation insert and prevents it from slipping out when aligning the pipe.
- The two screws allow a perfect adaptation of the pipe clamp to suit every outer pipe diameter.
- The connecting nut with combination thread M8 / M10 enables an optimised warehousing.
- The screw‘s loss protection guarantees an easy installation.

## Properties

- Material: steel DD11 (material no. 1.0332) acc. to DIN EN 10111
- Zinc plating: electro zinc-plated
- Connecting nut: resistance welded, M8 / M10 SW13
- Locking screw: flat head screw with TX drive (M5=TX25, M6=TX30)
- Material sound insulation insert: SBR/ EPDM; chlorine-free; silicone-free
- Sound insulation: for DIN 4109
- Temperature range: -40 °C to +100 °C
- Hardness: 55 ± 5° Shore A
- Fire behaviour: DIN 4102: Class B2

## Installation FRS-L Universal

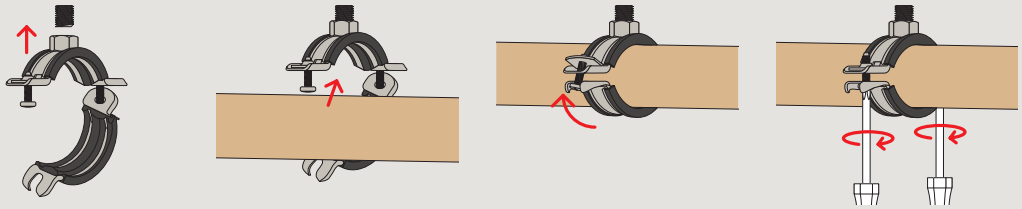

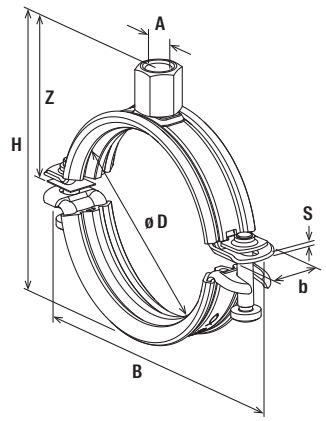


FRS-L Universal

## Technical data

| Item | Item no. | Fire test report | Thread A | Size [in] | Clamping range D [mm] | Width B [mm] | Height H [mm] | Height Z [mm] | Width x thickness clamp band b x s [mm] | Locking screw | Instal-lation torque $T_{inst}$ [Nm] | Max. recom. static load (centr. tension) $N_{rec}$ [kN] | Sales unit [pcs] |
|---|---|---|---|---|---|---|---|---|---|---|---|---|---|
| **FRS-L 8 - 11 Universal** | **539443** | Yes | M8 / M10 | – | 8 - 11 | 47 | 35 | 25 | 18 x 1.0 | M5 | 2 | 0.98 | 25 |
| **FRS-L 12 - 15 Universal** | **539444** | Yes | M8 / M10 | 1/4 | 12 - 15 | 52 | 39 | 27 | 18 x 1.0 | M5 | 2 | 0.98 | 25 |
| **FRS-L 15 - 19 Universal** | **539445** | Yes | M8 / M10 | 3/8 | 15 - 19 | 56 | 43 | 29 | 18 x 1.0 | M5 | 2 | 0.98 | 25 |
| **FRS-L 20 - 24 Universal** | **539446** | Yes | M8 / M10 | 1/2 | 20 - 24 | 61 | 48 | 31 | 18 x 1.0 | M5 | 2 | 0.98 | 25 |
| **FRS-L 25 - 30 Universal** | **539447** | Yes | M8 / M10 | 3/4 | 25 - 30 | 67 | 53 | 34 | 18 x 1.0 | M5 | 2 | 0.98 | 25 |
| **FRS-L 31 - 37 Universal** | **539448** | Yes | M8 / M10 | 1 | 31 - 37 | 74 | 61 | 38 | 18 x 1.0 | M5 | 2 | 0.98 | 25 |
| **FRS-L 38 - 45 Universal** | **539449** | Yes | M8 / M10 | 1 1/4 | 38 - 45 | 83 | 69 | 42 | 18 x 1.2 | M5 | 2 | 1.14 | 25 |
| **FRS-L 46 - 52 Universal** | **539450** | Yes | M8 / M10 | 1 1/2 | 46 - 52 | 90 | 76 | 45 | 18 x 1.2 | M5 | 2 | 1.14 | 25 |
| **FRS-L 53 - 59 Universal** | **539451** | Yes | M8 / M10 | – | 53 - 59 | 97 | 83 | 49 | 18 x 1.2 | M5 | 2 | 1.14 | 25 |
| **FRS-L 60 - 66 Universal** | **539452** | Yes | M8 / M10 | 2 | 60 - 66 | 104 | 90 | 52 | 18 x 1.2 | M5 | 2 | 1.14 | 10 |
| **FRS-L 67 - 75 Universal** | **539453** | Yes | M8 / M10 | – | 67 - 75 | 120 | 100 | 57 | 20 x 1.8 | M6 | 2 | 1.69 | 10 |
| **FRS-L 76 - 84 Universal** | **539454** | Yes | M8 / M10 | 2 1/2 | 76 - 84 | 130 | 109 | 62 | 20 x 1.8 | M6 | 2 | 1.69 | 10 |
| **FRS-L 85 - 93 Universal** | **539455** | Yes | M8 / M10 | 3 | 85 - 93 | 139 | 118 | 66 | 20 x 1.8 | M6 | 2 | 1.69 | 10 |
| **FRS-L 94 - 100 Universal** | **539456** | Yes | M8 / M10 | – | 94 - 100 | 146 | 125 | 70 | 20 x 1.8 | M6 | 2 | 1.69 | 10 |
| **FRS-L 101 - 109 Universal** | **539457** | Yes | M8 / M10 | – | 101 - 109 | 156 | 135 | 75 | 20 x 1.8 | M6 | 2 | 1.69 | 10 |
| **FRS-L 110 - 119 Universal** | **539459** | Yes | M8 / M10 | 4 | 110 - 119 | 165 | 144 | 79 | 20 x 1.8 | M6 | 2 | 1.69 | 10 |
| **FRS-L 120 - 129 Universal** | **544905** | Yes | M8 / M10 | – | 120 - 129 | 176 | 156 | 86 | 25 x 2.0 | M6 | 2 | 2.39 | 5 |
| **FRS-L 130 - 137 Universal** | **544906** | Yes | M8 / M10 | – | 130 - 137 | 184 | 164 | 90 | 25 x 2.0 | M6 | 2 | 2.39 | 5 |
| **FRS-L 138 - 145 Universal** | **544907** | Yes | M8 / M10 | 5 | 138 - 145 | 192 | 172 | 94 | 25 x 2.0 | M6 | 2 | 2.39 | 5 |
| **FRS-L 146 - 155 Universal** | **544908** | Yes | M8 / M10 | – | 146 - 155 | 202 | 182 | 99 | 25 x 2.0 | M6 | 2 | 2.39 | 5 |
| **FRS-L 156 - 163 Universal** | **544909** | Yes | M8 / M10 | – | 156 - 163 | 211 | 190 | 103 | 25 x 2.0 | M6 | 2 | 2.39 | 5 |
| **FRS-L 164 - 172 Universal** | **544910** | Yes | M8 / M10 | 6 | 164 - 172 | 219 | 199 | 106 | 25 x 2.0 | M6 | 2 | 2.39 | 5 |
| **FRS-L 175 - 183 Universal** | **569822** | – | M8 / M10 | – | 175 - 183 | 234 | 112 | 210 | 25 x 2.5 | M6 | 2 | 2.58 | 15 |
| **FRS-L 193 -201 Universal** | **569823** | – | M8 / M10 | – | 193 - 201 | 251 | 123 | 228 | 25 x 2.5 | M6 | 2 | 2.58 | 15 |
| **FRS-L 205 -213 Universal** | **569824** | – | M8 / M10 | – | 205 - 213 | 263 | 129 | 240 | 25 x 2.5 | M6 | 2 | 2.58 | 15 |
| **FRS-L 219 -225 Universal** | **569825** | – | M8 / M10 | 8 | 219 - 225 | 278 | 134 | 253 | 25 x 2.5 | M6 | 2 | 2.58 | 15 |

For load information under fire exposure, see chapter Basic knowledge.

# Sliding clamp FKS2

The two-screw sliding clamp for plastic and metal composite pipes







Height-adjustable ceiling installation



Wall mounting on cantilever arm

## Applications

- Fixing of plastic and metal composite pipes up to 160 mm.
- Can be used as a sliding clamp with spacer rings or as a clamp after removing the spacer rings.
- For use in dry indoor areas.

## Advantages

- The spacer rings on the screw plug ensure that the pipes slide smoothly.
- The unique quick-release fastener with all-round edge enables secure and time-saving installation.
- The clamp band with pronounced beading on the edge gives the sound insulation insert a secure fit and prevents it from falling out during pipe adjustment.
- The connection nut with M8 / M10 / ½“ combination thread enables optimised fixing to the substrate.
- The loss protection of the screw ensures problem-free installation.

## Properties

- Material: steel DD11 (material no. 1.0332) acc. to DIN EN 10111
- Zinc plating: electro zinc-plated
- Connection nut: resistance-welded, M8 / M10 / ½“
- Screw plug: Flat-head screw with TX drive (M5=TX25, M6=TX30)
- Material sound insulation insert: SBR/ EPDM with flocking; chlorine-free; silicone-free
- Sound insulation: for DIN 4109
- Temperature range: -40 °C to +100 °C
- Hardness: 55 ± 5° Shore A
- Fire behaviour: DIN 4102: Class B2

## FKS2 sliding function

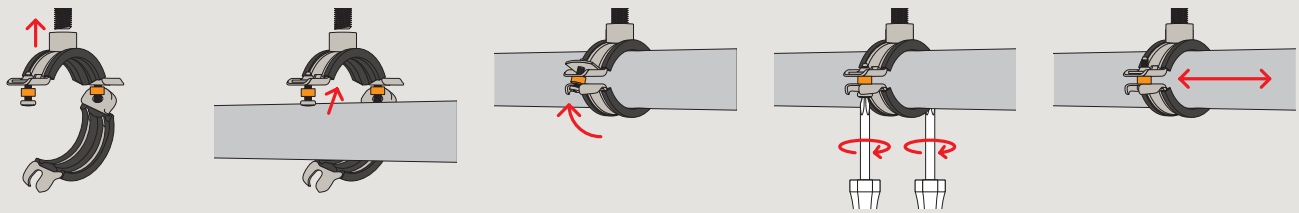

## FKS2 clamping function

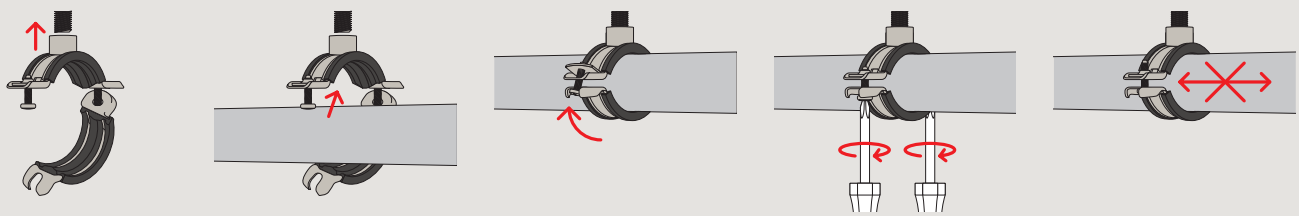

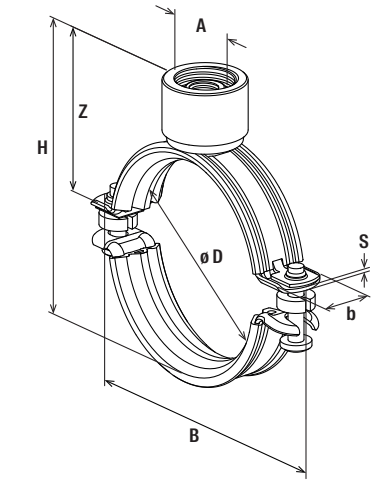


FKS2

## Technical data

| Item | Item no. | Thread<br>A | Clamping range<br>D<br>[mm] | Width<br>B<br>[mm] | Height<br>H<br>[mm] | Height<br>Z<br>[mm] | Width x thickness clamp band<br>b x s<br>[mm] | Locking screw | Drive | Installation torque<br>$T_{inst}$<br>[Nm] | Max. recom. static load (centr. tension)<br>$N_{rec}$<br>[kN] | Sales unit<br>[pcs] |
|---|---|---|---|---|---|---|---|---|---|---|---|---|
| **FKS2 50** | **572196** | M8 / M10 / 1/2“ | 46 - 52 | 90 | 81 | 50 | 18 x 1.2 | M5 | TX25 | 2 | 1.14 | 25 |
| **FKS2 56** | **572197** | M8 / M10 / 1/2“ | 53 - 59 | 97 | 88 | 54 | 18 x 1.2 | M5 | TX25 | 2 | 1.14 | 25 |
| **FKS2 63** | **572198** | M8 / M10 / 1/2“ | 60 - 66 | 104 | 95 | 57 | 18 x 1.2 | M5 | TX25 | 2 | 1.14 | 10 |
| **FKS2 75** | **572199** | M8 / M10 / 1/2“ | 67 - 75 | 120 | 105 | 62 | 20 x 1.8 | M6 | TX30 | 2 | 1.69 | 10 |
| **FKS2 90** | **572200** | M8 / M10 / 1/2“ | 85 - 93 | 139 | 123 | 71 | 20 x 1.8 | M6 | TX30 | 2 | 1.69 | 10 |
| **FKS2 110** | **572201** | M8 / M10 / 1/2“ | 110 - 119 | 165 | 149 | 84 | 20 x 1.8 | M6 | TX30 | 2 | 1.69 | 10 |
| **FKS2 125** | **572202** | M8 / M10 / 1/2“ | 120 - 129 | 176 | 161 | 91 | 25 x 2.0 | M6 | TX30 | 2 | 2.39 | 5 |
| **FKS2 135** | **572203** | M8 / M10 / 1/2“ | 130 - 137 | 184 | 169 | 95 | 25 x 2.0 | M6 | TX30 | 2 | 2.39 | 5 |
| **FKS2 140** | **572204** | M8 / M10 / 1/2“ | 138 - 145 | 192 | 177 | 99 | 25 x 2.0 | M6 | TX30 | 2 | 2.39 | 5 |
| **FKS2 160** | **572205** | M8 / M10 / 1/2“ | 156 - 163 | 211 | 195 | 108 | 25 x 2.0 | M6 | TX30 | 2 | 2.39 | 5 |

# Pipe clamp FRS Triple

The two-screw pipe clamp with rapid-locking mechanism and triple connecting nut







Pipe assembly

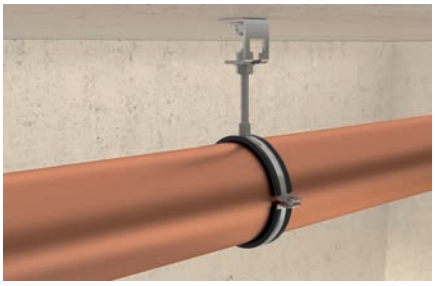

Height adjustable pipe installation

## Applications

- For simple and easy fixing of pipelines with threaded rods or hanger bolts.
- For use in dry interior areas.

## Advantages

- The connecting nut with combination thread M8/M10/½" allows for optimised mounting positioning.
- The rapid-locking mechanism allows for fast and time-saving installation.
- The tight fit of the sound insulation insert prevents it from falling out when aligning the pipe.
- The two screws allow for ideal adaptation to suit the outer pipe diameter.

## Properties

- Material: steel DD11 (material no. 1.0332) acc. to DIN EN 10111
- Zinc plating: electro zinc-plated
- Connecting nut: resistance welded, M8/M10/½"
- Locking screw: flat head screw with combination recessed head
- Material sound insulation insert: SBR/EPDM; chlorine-free; silicone-free
- Sound insulation: for DIN 4109
- Temperature range: -50 °C to +110 °C
- Hardness: 45 ± 5° Shore A
- Fire behaviour: DIN 4102: Class B2

## Installation FRS Triple

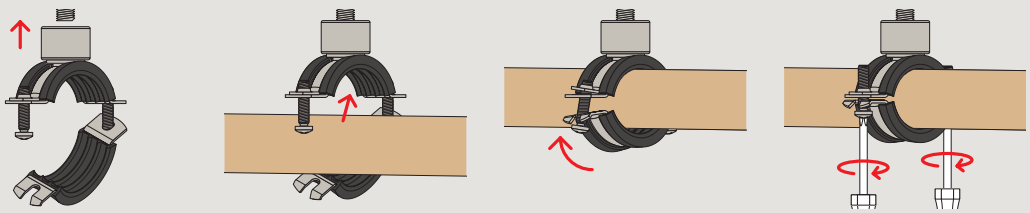

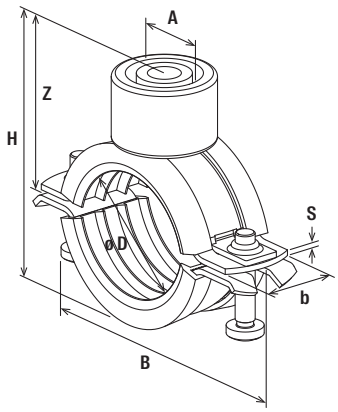


FRS Triple

## Technical data

| Item | Item no. | Thread A | Size [in] | Clamping range D [mm] | Width B [mm] | Height H [mm] | Height Z [mm] | Width x thickness clamp band b x s [mm] | Locking screw | Installation torque $T_{inst}$ [Nm] | Max. recom. static load (centr. tension) $N_{rec}$ [kN] | Sales unit [pcs] |
|---|---|---|---|---|---|---|---|---|---|---|---|---|
| **FRS Triple 15 - 19** | **500698** | M8 / M10 / 1/2“ | 3/8 | 15 - 19 | 61 | 53 | 36 | 20 x 1.5 | M5 | 2 | 1.00 | 100 |
| **FRS Triple 21 - 23** | **500699** | M8 / M10 / 1/2“ | 1/2 | 21 - 23 | 65 | 57 | 38 | 20 x 1.5 | M5 | 2 | 1.00 | 100 |
| **FRS Triple 26 - 28** | **500700** | M8 / M10 / 1/2“ | 3/4 | 26 - 28 | 70 | 62 | 40 | 20 x 1.5 | M5 | 2 | 1.00 | 100 |
| **FRS Triple 32 - 35** | **500701** | M8 / M10 / 1/2“ | 1 | 32 - 35 | 77 | 69 | 44 | 20 x 1.5 | M5 | 2 | 1.00 | 100 |
| **FRS Triple 40 - 43** | **500702** | M8 / M10 / 1/2“ | 1 1/4 | 40 - 43 | 85 | 77 | 48 | 20 x 1.5 | M5 | 2 | 1.00 | 50 |
| **FRS Triple 48 - 56** | **500703** | M8 / M10 / 1/2“ | 1 1/2 | 48 - 56 | 98 | 90 | 54 | 20 x 1.5 | M5 | 2 | 1.00 | 50 |
| **FRS Triple 57 - 62** | **500704** | M8 / M10 / 1/2“ | 2 | 57 - 63 | 104 | 96 | 57 | 20 x 1.5 | M5 | 2 | 1.00 | 50 |
| **FRS Triple 63 - 70** | **500705** | M8 / M10 / 1/2“ | – | 63 - 70 | 112 | 104 | 61 | 20 x 1.5 | M5 | 2 | 1.00 | 25 |
| **FRS Triple 74 - 80** | **500706** | M8 / M10 / 1/2“ | 2 1/2 | 74 - 80 | 122 | 114 | 66 | 20 x 1.5 | M5 | 2 | 1.00 | 25 |
| **FRS Triple 83 - 91** | **500707** | M8 / M10 / 1/2“ | 3 | 83 - 91 | 133 | 125 | 72 | 20 x 1.5 | M5 | 2 | 1.00 | 25 |
| **FRS Triple 100 - 105** | **500708** | M8 / M10 / 1/2“ | – | 100 - 105 | 155 | 139 | 79 | 23 x 2.0 | M6 | 2 | 1.50 | 10 |
| **FRS Triple 108 - 114** | **500709** | M8 / M10 / 1/2“ | 4 | 108 - 114 | 164 | 148 | 83 | 23 x 2.0 | M6 | 2 | 1.50 | 10 |
| **FRS Triple 115 - 125** | **500710** | M8 / M10 / 1/2“ | – | 115 - 125 | 175 | 159 | 89 | 23 x 2.0 | M6 | 2 | 1.50 | 10 |
| **FRS Triple 127 - 135** | **500711** | M8 / M10 / 1/2“ | – | 127 - 135 | 185 | 169 | 94 | 23 x 2.0 | M6 | 2 | 1.50 | 10 |
| **FRS Triple 135 - 140** | **500712** | M8 / M10 / 1/2“ | 5 | 135 - 140 | 190 | 174 | 96 | 23 x 2.0 | M6 | 2 | 1.50 | 10 |
| **FRS Triple 159 - 169** | **500713** | M8 / M10 / 1/2“ | 6 | 159 - 169 | 219 | 203 | 111 | 23 x 2.0 | M6 | 2 | 1.50 | 10 |

# Pipe clamp FRS

The two-screw pipe clamp with combination connecting thread







Pipe assembly

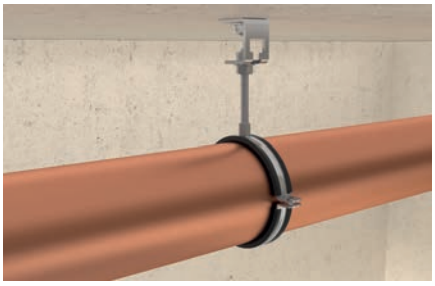

Height adjustable pipe installation

## Applications

- Secure fixing for pipes with threaded rods or stud screws (also when there are fire protection requirements).
- For use in dry interior areas.

## Certificates

ETA-21/0253

## Advantages

- The fire test report guarantees independently tested functional safety.
- The two screws allow an easy adjustment to suit the outer pipe diameter.
- The combination connecting nut with thread M8/M10 enables optimised mounting choices.
- The sound insulation insert offers noise protection and prevents contact corrosion.
- The screw‘s safety feature ensures trouble-free installation.

## Properties

- Material: steel DC01 (material no. 1.0330) acc. to DIN EN 10130
- Zinc plating: electro zinc-plated
- Connecting nut: resistance welded, M8 / M10, SW 13
- Locking screw: flat head screw with combination recessed head
- Material sound insulation insert: EPDM; chlorine-free; silicone-free
- Sound insulation: for DIN 4109
- Temperature range: -40 °C to +100 °C
- Hardness: 55 ± 5° Shore A
- Fire behaviour: DIN 4102: Class B2

## Installation FRS

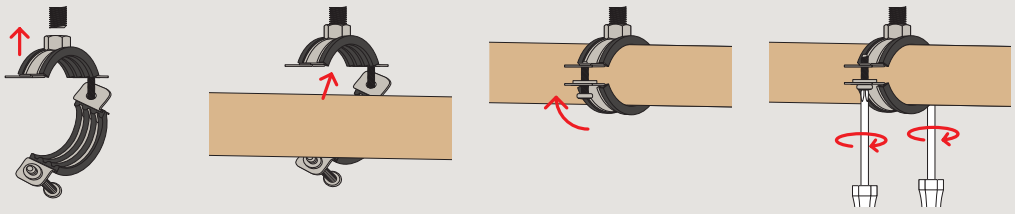

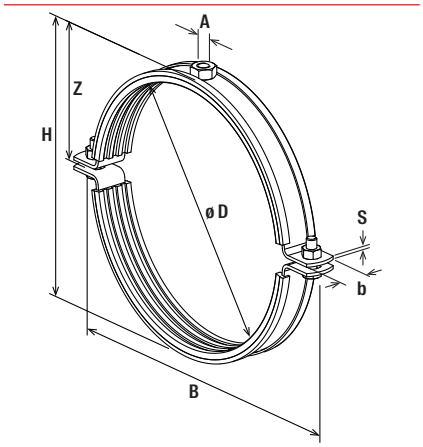


FRS (>6“ or 168 mm)

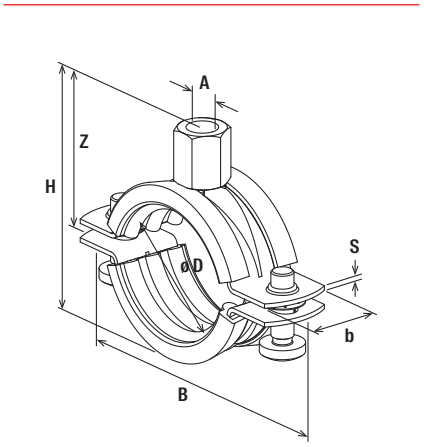


FRS

## Technical data

| Item | Item no. | Approval ETA | Fire test report | Thread A | Size [in] | Clamping range D [mm] | Width B [mm] | Height H [mm] | Height Z [mm] | Width x thickness clamp band b x s [mm] | Locking screw | Installation torque $T_{inst}$ [Nm] | Max. recom. static load (centr. tension) $N_{rec}$ [kN] | Sales unit [pcs] |
|---|---|---|---|---|---|---|---|---|---|---|---|---|---|---|
| **FRS 12 - 15 M8/M10** | **510969** | ● | Yes | M8 / M10 | 1/4 | 12 - 15 | 55 | 39 | 31 | 20 x 1.25 | M6 | 2 | 1.00 | 100 |
| **FRS 15 - 19 M8/M10** | **042535** | ● | Yes | M8 / M10 | 3/8 | 15 - 19 | 59 | 43 | 29 | 20 x 1.25 | M6 | 2 | 1.00 | 100 |
| **FRS 20 - 24 M8/M10** | **042536** | ● | Yes | M8 / M10 | 1/2 | 20 - 24 | 65 | 48 | 32 | 20 x 1.25 | M6 | 2 | 1.00 | 100 |
| **FRS 25 - 30 M8/M10** | **042537** | ● | Yes | M8 / M10 | 3/4 | 25 - 30 | 72 | 54 | 35 | 20 x 1.25 | M6 | 2 | 1.00 | 100 |
| **FRS 32 - 37 M8/M10** | **042538** | ● | Yes | M8 / M10 | 1 | 32 - 37 | 77 | 61 | 38 | 20 x 1.25 | M6 | 2 | 1.00 | 100 |
| **FRS 40 - 45 M8/M10** | **042554** | ● | Yes | M8 / M10 | 1 1/4 | 40 - 45 | 89 | 69 | 42 | 20 x 1.25 | M6 | 2 | 1.00 | 50 |
| **FRS 48 - 54 M8/M10** | **510970** | ● | Yes | M8 / M10 | 1 1/2 | 48 - 54 | 99 | 78 | 46 | 20 x 1.25 | M6 | 2 | 1.00 | 50 |
| **FRS 55 - 61 M8/M10** | **042555** | ● | Yes | M8 / M10 | 2 | 55 - 61 | 105 | 85 | 50 | 20 x 1.25 | M6 | 2 | 1.00 | 50 |
| **FRS 60 - 64 M8/M10** | **091488** | ● | Yes | M8 / M10 | 2 | 63 - 67 | 111 | 91 | 53 | 20 x 1.25 | M6 | 2 | 1.00 | 50 |
| **FRS 72 - 78 M8/M10** | **091489** | ● | Yes | M8 / M10 | 2 1/2 | 72 - 80 | 125 | 104 | 60 | 20 x 2.0 | M6 | 2 | 1.50 | 25 |
| **FRS 87 - 92 M8/M10** | **091505** | ● | Yes | M8 / M10 | 3 | 87 - 92 | 137 | 116 | 66 | 20 x 2.0 | M6 | 2 | 1.50 | 25 |
| **FRS 95 - 103 M8/M10** | **545649** | ● | Yes | M8 / M10 | – | 95 - 103 | 149 | 130 | 73 | 25 x 2.0 | M6 | 2 | 2.00 | 25 |
| **FRS 102 - 116 M8/M10** | **091506** | ● | Yes | M8 / M10 | 4 | 108 - 116 | 164 | 140 | 78 | 25 x 2.0 | M6 | 2 | 2.00 | 20 |
| **FRS 121 - 127 M8/M10** | **079456** | ● | Yes | M8 / M10 | – | 121 - 128 | 176 | 152 | 84 | 25 x 2.5 | M6 | 2 | 2.50 | 10 |
| **FRS 133 - 141 M8/M10** | **079457** | ● | Yes | M8 / M10 | 5 | 133 - 141 | 187 | 165 | 90 | 25 x 2.5 | M6 | 2 | 2.50 | 10 |
| **FRS 159 - 162 M8/M10** | **079458** | ● | Yes | M8 / M10 | – | 159 - 165 | 211 | 198 | 102 | 25 x 2.5 | M6 | 2 | 2.50 | 8 |
| **FRS 165 - 168 M8/M10** | **079459** | ● | Yes | M8 / M10 | 6 | 165 - 168 | 225 | 192 | 104 | 25 x 2.5 | M6 | 2 | 2.50 | 8 |
| **FRS 200 - 206 M10** | **539660** | – | – | M10 | – | 200 - 206 | 256 | 227 | 118 | 25 x 2.5 | M8 | 3 | 2.75 | 15 |
| **FRS 210 - 219 M10** | **558335** | – | – | M10 | 8 | 210 - 219 | 262 | 240 | 124 | 25 x 2.5 | M8 | 3 | 2.75 | 15 |

For load information under fire exposure, see chapter Basic knowledge.

# Silicone pipe clamp FRSH

The two-screw pipe clamp with a sound insulation insert with resistance to high temperatures







Sliding element on cantilever

## Applications

- Fixing of high-temperature pipelines with threaded rods or stud screws (e.g. steam pipes).
- For use in dry interior areas.

## Advantages

- The special silicone sound insulation insert allows a use with average temperatures of up to +220 °C.
- The two screws enable an easy adjustment to suit the outer pipe diameter.
- The screw‘s safety feature ensures trouble-free installation.

## Properties

- Material: steel DD11 (material no. 1.0332) acc. to DIN EN 10111
- Zinc plating: electro zinc-plated
- Connecting nut: (up to FRSH 59 - 63) resistance welded, M8 and M8/M10 SW 13, M10 SW 17
- Locking screw: flat head screw with combination recessed head
- Material sound insulation insert: silicone
- Sound insulation: for DIN 4109
- Temperature range: -40 °C to +220 °C
- Hardness: 60 ± 5° Shore A
- Fire behaviour: DIN 4102: Class B2

## Installation FRSH

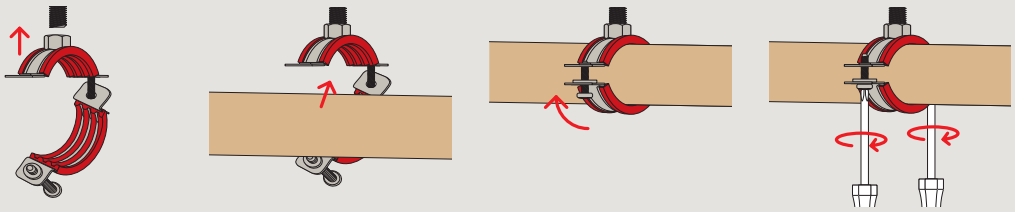

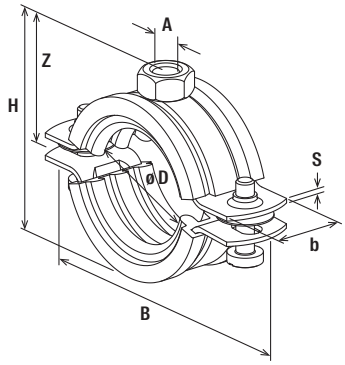


FRSH

## Technical data

| Item | Item no. | Thread A | Size [in] | Clamping range D [mm] | Width B [mm] | Height H [mm] | Height Z [mm] | Width x thickness clamp band b x s [mm] | Locking screw | Installation torque $T_{inst}$ [Nm] | Max. re-com. static load (centr. tension) $N_{rec}$ [kN] | Sales unit [pcs] |
|---|---|---|---|---|---|---|---|---|---|---|---|---|
| **FRSH 15 - 19** | **063490** | M8 | 3/8 | 15 - 19 | 62 | 41 | 24 | 20 x 1.25 | M5 | 2 | 1.00 | 100 |
| **FRSH 20 - 24** | **063492** | M8 | 1/2 | 20 - 24 | 68 | 46 | 26 | 20 x 1.25 | M5 | 2 | 1.00 | 100 |
| **FRSH 25 - 30** | **063494** | M8 | 3/4 | 25 - 30 | 75 | 52 | 29 | 20 x 1.25 | M5 | 2 | 1.00 | 100 |
| **FRSH 32 - 37** | **063495** | M8 | 1 | 32 - 37 | 80 | 59 | 33 | 20 x 1.25 | M5 | 2 | 1.00 | 100 |
| **FRSH 40 - 45** | **063498** | M8 | 1 1/4 | 40 - 45 | 90 | 67 | 37 | 20 x 1.25 | M5 | 2 | 1.00 | 50 |
| **FRSH 48 - 53** | **063499** | M8 | 1 1/2 | 48 - 53 | 97 | 75 | 41 | 20 x 1.25 | M5 | 2 | 1.00 | 50 |
| **FRSH 54 - 59** | **063500** | M8 | – | 54 - 59 | 104 | 81 | 44 | 20 x 1.25 | M5 | 2 | 1.00 | 50 |
| **FRSH 60 - 64** | **063502** | M8 | 2 | 60 - 64 | 110 | 86 | 46 | 20 x 1.25 | M5 | 2 | 1.00 | 50 |
| **FRSH 68 - 73** | **063504** | M10 | – | 68 - 73 | 122 | 95 | 51 | 25 x 1.5 | M6 | 2 | 1.30 | 25 |
| **FRSH 74 - 78** | **063505** | M10 | 2 1/2 | 74 - 78 | 130 | 100 | 55 | 25 x 1.5 | M6 | 2 | 1.30 | 25 |
| **FRSH 80 - 86** | **063511** | M10 | – | 80 - 86 | 130 | 108 | 58 | 25 x 1.5 | M6 | 2 | 1.30 | 25 |
| **FRSH 87 - 92** | **063513** | M10 | 3 | 87 - 92 | 141 | 114 | 61 | 25 x 1.5 | M6 | 2 | 1.30 | 25 |
| **FRSH 95 - 103** | **063518** | M10 | – | 95 - 103 | 156 | 125 | 67 | 25 x 1.5 | M6 | 2 | 1.30 | 25 |
| **FRSH 102 - 116** | **063520** | M10 | 4 | 102 - 116 | 172 | 140 | 74 | 25 x 2.0 | M6 | 2 | 2.00 | 20 |
| **FRSH 133 - 141** | **063537** | M8 / M10 | 5 | 133 - 141 | 198 | 174 | 95 | 25 x 2.5 | M8 | 3 | 2.00 | 10 |
| **FRSH 159 - 168** | **091507** | M8 / M10 | – | 159 - 168 | 226 | 201 | 109 | 25 x 2.5 | M8 | 3 | 2.00 | 8 |

# Pipe clamp FRSN Triple

The two-screw pipe clamp with rapid-locking mechanism and triple connecting nut







Waste water pipe

## Applications

- For simple and easy fixing of pipelines with threaded rods or hanger bolts.
- For use in dry interior areas.

## Advantages

- The connecting nut with combination thread M8 / M10 / ½" allows for optimised mounting positioning.
- The rapid-locking mechanism allows for fast and time-saving installation.
- The two screws allow for ideal adaptation to suit the outer pipe diameter.

## Properties

- Material: steel DD11 (material no. 1.0332) acc. to DIN EN 10111
- Zinc plating: electro zinc-plated
- Connecting nut: resistance welded, M8 / M10 / ½"
- Locking screw: flat head screw with combination recessed head

## Installation FRSN Triple

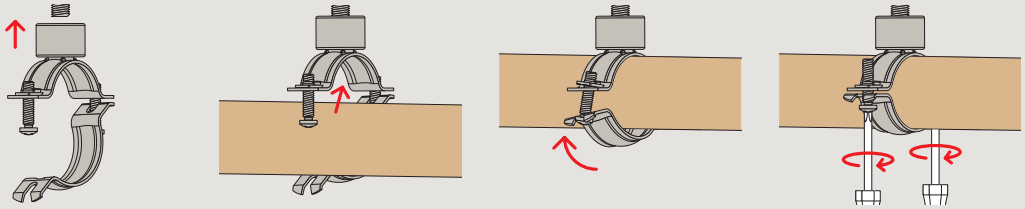

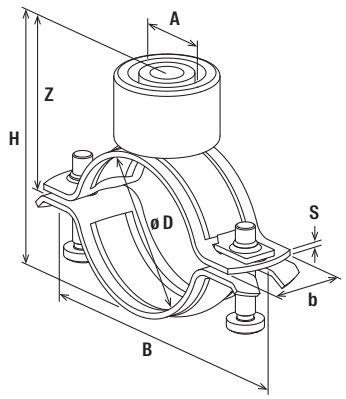


FRSN Triple

## Technical data

| | Item no. | Thread<br>A | Size<br>[in] | Clamping range<br>D<br>[mm] | Width<br>B<br>[mm] | Height<br>H<br>[mm] | Height<br>Z<br>[mm] | Width x thickness clamp band<br>b x s<br>[mm] | Locking screw | Installation torque<br>$T_{inst}$<br>[Nm] | Max. recom. static load (centr. tension)<br>$N_{rec}$<br>[kN] | Sales unit<br>[pcs] |
|---|---|---|---|---|---|---|---|---|---|---|---|---|
| **Item** | | | | | | | | | | | | |
| **FRSN Triple 15 - 19** | **500714** | M8 / M10 / 1/2“ | 3/8 | 15 - 19 | 54 | 44 | 32 | 20 x 1.5 | M5 | 2 | 1.00 | 100 |
| **FRSN Triple 21 - 23** | **500715** | M8 / M10 / 1/2“ | 1/2 | 21 - 23 | 58 | 48 | 34 | 20 x 1.5 | M5 | 2 | 1.00 | 100 |
| **FRSN Triple 26 - 28** | **500716** | M8 / M10 / 1/2“ | 3/4 | 26 - 28 | 63 | 53 | 36 | 20 x 1.5 | M5 | 2 | 1.00 | 100 |
| **FRSN Triple 32 - 35** | **500717** | M8 / M10 / 1/2“ | 1 | 32 - 35 | 70 | 60 | 40 | 20 x 1.5 | M5 | 2 | 1.00 | 100 |
| **FRSN Triple 40 - 43** | **500718** | M8 / M10 / 1/2“ | 1 1/4 | 40 - 43 | 78 | 68 | 44 | 20 x 1.5 | M5 | 2 | 1.00 | 50 |
| **FRSN Triple 48 - 56** | **500719** | M8 / M10 / 1/2“ | 1 1/2 | 48 - 56 | 91 | 81 | 50 | 20 x 1.5 | M5 | 2 | 1.00 | 50 |
| **FRSN Triple 57 - 62** | **500720** | M8 / M10 / 1/2“ | 2 | 57 - 63 | 97 | 87 | 53 | 20 x 1.5 | M5 | 2 | 1.00 | 50 |
| **FRSN Triple 63 - 70** | **500721** | M8 / M10 / 1/2“ | – | 63 - 70 | 105 | 95 | 57 | 20 x 1.5 | M5 | 2 | 1.00 | 50 |
| **FRSN Triple 74 - 80** | **500722** | M8 / M10 / 1/2“ | 2 1/2 | 74 - 80 | 115 | 105 | 62 | 20 x 1.5 | M5 | 2 | 1.00 | 25 |
| **FRSN Triple 83 - 91** | **500723** | M8 / M10 / 1/2“ | 3 | 83 - 91 | 126 | 116 | 68 | 20 x 1.5 | M5 | 2 | 1.00 | 25 |
| **FRSN Triple 100 - 105** | **500724** | M8 / M10 / 1/2“ | – | 100 - 105 | 148 | 130 | 74 | 23 x 2.0 | M6 | 2 | 1.50 | 10 |
| **FRSN Triple 108 - 114** | **500725** | M8 / M10 / 1/2“ | 4 | 108 - 114 | 157 | 139 | 78 | 23 x 2.0 | M6 | 2 | 1.50 | 10 |

# Pipe clamp FRSN

The two-screw pipe clamp without sound insulation insert







Waste water pipe

## Applications

- Fixing of metal or plastic pipes without sound insulation requirements with threaded rods or stud screws (e.g. in industrial constructions).
- For use in dry interior areas.

## Advantages

- The FRSN without the sound insulation insert is ideal for use in industrial applications and plastic pipes.
- The combination connecting nut with thread M8 / M10 allows for optimised mounting choices.
- The two screws enable ideal adaptation to suit the outer pipe diameter.
- The screw‘s safety feature ensures trouble-free installation.

## Properties

- Material: steel DD11 (material no. 1.0332) acc. to DIN EN 10111
- Zinc plating: electro zinc-plated
- Connecting nut: resistance welded M8 / M10 SW 13, M10 / M12 SW 17
- Locking screw: flat head screw with combination recessed head

## Installation FRSN

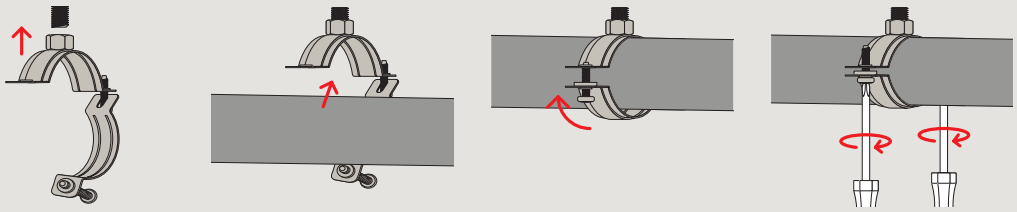

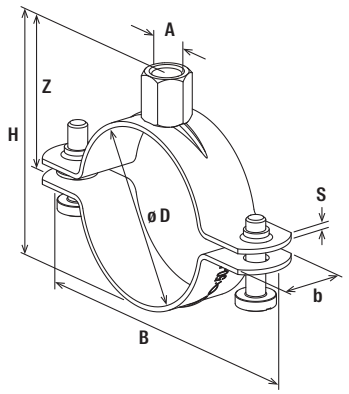


FRSN

## Technical data

| Item | Item no. | Thread A | Size [in] | Clamping range D [mm] | Width B [mm] | Height H [mm] | Height Z [mm] | Width x thickness clamp band b x s [mm] | Locking screw | Installation torque $T_{inst}$ [Nm] | Max. re-com. static load (centr. tension) $N_{rec}$ [kN] | Sales unit [pcs] |
|---|---|---|---|---|---|---|---|---|---|---|---|---|
| **FRSN 15 - 19 M8/M10** | **049459** | M8 / M10 | 3/8 | 15 - 19 | 56 | 37 | 27 | 20 x 1.5 | M6 | 2 | 1.50 | 100 |
| **FRSN 21 - 23 M8/M10** | **049789** | M8 / M10 | 1/2 | 21 - 23 | 60 | 41 | 28 | 20 x 1.5 | M6 | 2 | 1.50 | 100 |
| **FRSN 25 - 28 M8/M10** | **049790** | M8 / M10 | 3/4 | 25 - 28 | 67 | 46 | 30 | 20 x 1.5 | M6 | 2 | 1.50 | 100 |
| **FRSN 32 - 36 M8/M10** | **049793** | M8 / M10 | 1 | 32 - 36 | 74 | 54 | 34 | 20 x 1.5 | M6 | 2 | 1.50 | 100 |
| **FRSN 38 - 43 M8/M10** | **049794** | M8 / M10 | 1 1/4 | 38 - 43 | 78 | 61 | 38 | 20 x 1.5 | M6 | 2 | 1.50 | 50 |
| **FRSN 50 - 56 M8/M10** | **049922** | M8 / M10 | – | 50 - 56 | 92 | 74 | 43 | 20 x 1.5 | M6 | 2 | 1.50 | 50 |
| **FRSN 57 - 61 M8/M10** | **049944** | M8 / M10 | 2 | 57 - 61 | 98 | 79 | 47 | 20 x 1.5 | M6 | 2 | 1.50 | 50 |
| **FRSN 63 - 70 M8/M10** | **049945** | M8 / M10 | – | 63 - 70 | 105 | 88 | 54 | 20 x 1.5 | M6 | 2 | 1.50 | 50 |
| **FRSN 70 - 77 M8/M10** | **049947** | M8 / M10 | 2 1/2 | 70 - 77 | 112 | 95 | 55 | 20 x 1.5 | M6 | 2 | 1.50 | 25 |
| **FRSN 80 - 83 M8/M10** | **049948** | M8 / M10 | – | 80 - 83 | 116 | 101 | 58 | 20 x 1.5 | M6 | 2 | 1.50 | 25 |
| **FRSN 83 - 91 M8/M10** | **049979** | M8 / M10 | 3 | 83 - 91 | 128 | 111 | 63 | 20 x 2.0 | M6 | 2 | 2.50 | 25 |
| **FRSN 93 - 99 M8/M10** | **050005** | M8 / M10 | – | 93 - 99 | 123 | 118 | 67 | 20 x 2.0 | M6 | 2 | 2.50 | 25 |
| **FRSN 100 - 106 M8/M10** | **050006** | M8 / M10 | – | 100 - 106 | 143 | 126 | 70 | 20 x 2.0 | M6 | 2 | 2.50 | 25 |
| **FRSN 108 - 114 M8/M10** | **050008** | M8 / M10 | 4 | 108 - 114 | 156 | 134 | 75 | 20 x 2.0 | M6 | 2 | 2.50 | 25 |
| **FRSN 118 - 122 M8/M10** | **500744** | M8 / M10 | – | 118 - 122 | 160 | 142 | 78 | 20 x 2.0 | M6 | 2 | 2.50 | 25 |
| **FRSN 123 - 128 M8/M10** | **050009** | M8 / M10 | – | 123 - 128 | 173 | 149 | 82 | 25 x 2.5 | M6 | 2 | 2.50 | 25 |
| **FRSN 131 - 136 M8/M10** | **050010** | M8 / M10 | – | 131 - 136 | 176 | 157 | 86 | 25 x 2.5 | M6 | 2 | 2.50 | 25 |
| **FRSN 137 - 146 M8/M10** | **050023** | M8 / M10 | 5 | 137 - 146 | 180 | 167 | 91 | 25 x 2.5 | M6 | 2 | 2.50 | 25 |
| **FRSN 146 - 156 M8/M10** | **500746** | M8 / M10 | – | 146 - 156 | 195 | 177 | 96 | 25 x 2.5 | M6 | 2 | 2.50 | 25 |
| **FRSN 159 - 165 M10/M12** | **500747** | M10 / M12 | – | 159 - 165 | 203 | 191 | 106 | 25 x 2.5 | M6 | 2 | 2.50 | 25 |
| **FRSN 166 - 175 M10/M12** | **500748** | M10 / M12 | – | 166 - 175 | 211 | 201 | 110 | 25 x 2.5 | M8 | 3 | 2.50 | 20 |
| **FRSN 200 - 206 M10/M12** | **500751** | M10 / M12 | – | 200 - 206 | 248 | 232 | 126 | 25 x 2.5 | M8 | 3 | 2.50 | 10 |
| **FRSN 210 - 219 M10/M12** | **500752** | M10 / M12 | 8 | 210 - 219 | 261 | 245 | 133 | 25 x 2.5 | M8 | 3 | 2.50 | 10 |

# Heavy duty pipe clamp FRSM – inch

The large pipe clamp with sound insulation insert for medium to heavy loads





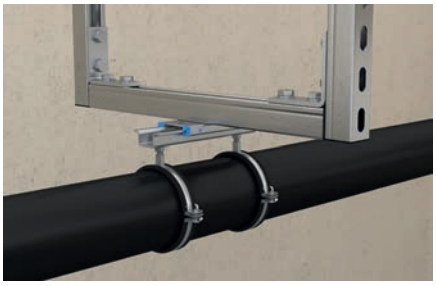

Pipe elongation with sliding element and suspended pipe



Upright pipe on cantilever arm

## Applications

- Fixing of medium to heavy pipes with threaded rods (hanger bolts).
- For use in dry interior areas.

## Advantages

- The inch threaded connecting nut allows for a pipe fixing with increased bending stress.
- High tested loads ensures the secure functioning of the FRSM.
- The sound insulation insert offers noise protection and prevents contact corrosion.
- The two screws allow an easy adjustment to suit the outer pipe diameter.
- The screw‘s safety feature ensures trouble-free installation.

## Properties

- Material: steel DD11 (material no. 1.0332) acc. to DIN EN 10111
- Zinc plating: electro zinc-plated
- Connecting nut: ½“ resistance welded
- Locking screw: flat head screw with combination recessed head
- Material sound insulation insert: EPDM; chlorine-free; silicone-free
- Temperature range: -50 °C to +110 °C
- Hardness: 45 ± 5° Shore A
- Fire behaviour: DIN 4102: Class B2

## Installation FRSM

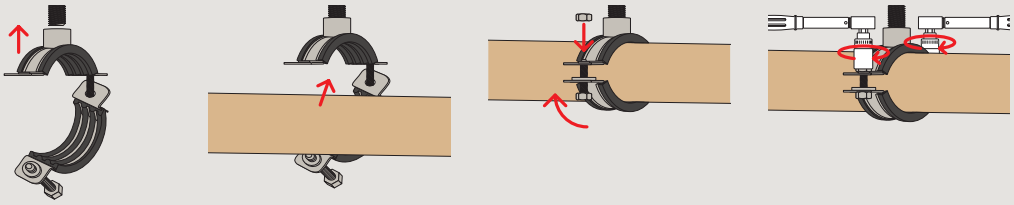

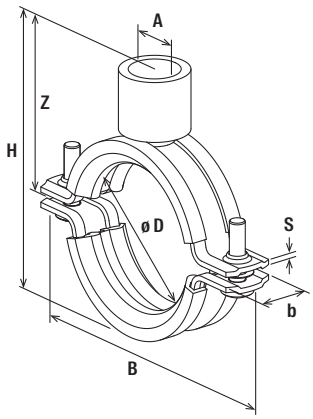


FRSM - inch

## Technical data

| | | Thread | Size | Clamping range | Width | Height | Height | Width x thickness clamp band | Locking screw | Installation torque | Max. re-com. static load (centr. tension) | Sales unit |
|---|---|---|---|---|---|---|---|---|---|---|---|---|
| | | A | | D | B | H | Z | b x s | | $T_{inst}$ | $N_{rec}$ | |
| | Item no. | | [in] | [mm] | [mm] | [mm] | [mm] | [mm] | | [Nm] | [kN] | [pcs] |
| Item | | | | | | | | | | | | |
| FRSM 14 - 20 1/2“ | 535494 | 1/2“ | 3/8 | 14 - 20 | 64.3 | 64 | 44.5 | 20 x 2.0 | M6 | 2 | 1.50 | 25 |
| FRSM 21 - 26 1/2“ | 535497 | 1/2“ | 1/2 | 21 - 26 | 70.6 | 70 | 47.5 | 20 x 2.0 | M6 | 2 | 1.50 | 25 |
| FRSM 26 - 30 1/2“ | 535498 | 1/2“ | 3/4 | 26 - 30 | 74.8 | 74 | 49.5 | 20 x 2.0 | M6 | 2 | 1.50 | 25 |
| FRSM 31 - 38 1/2“ | 535499 | 1/2“ | 1 | 31 - 38 | 81 | 80 | 52.5 | 20 x 2.0 | M6 | 2 | 1.50 | 25 |
| FRSM 40 - 47 1/2“ | 535500 | 1/2“ | 1 1/4 | 40 - 47 | 91.2 | 90 | 57.5 | 20 x 2.0 | M6 | 2 | 1.50 | 25 |
| FRSM 48 - 54 1/2“ | 535501 | 1/2“ | 1 1/2 | 48 - 54 | 100 | 98 | 61.5 | 20 x 2.0 | M6 | 2 | 1.50 | 25 |
| FRSM 60 - 66 1/2“ | 535502 | 1/2“ | 2 | 60 - 66 | 111.1 | 109 | 67 | 20 x 2.0 | M6 | 2 | 1.50 | 25 |
| FRSM 73 - 80 1/2“ | 535503 | 1/2“ | 2 1/2 | 73 - 80 | 131.4 | 123 | 74 | 25 x 2.5 | M8 | 3 | 3.15 | 10 |
| FRSM 87 - 94 1/2“ | 535504 | 1/2“ | 3 | 87 - 94 | 145.5 | 137 | 81 | 25 x 2.5 | M8 | 3 | 3.15 | 10 |
| FRSM 105 - 112 1/2“ | 535505 | 1/2“ | – | 105 - 112 | 165.6 | 157 | 91 | 25 x 2.5 | M8 | 3 | 3.15 | 10 |
| FRSM 112 - 118 1/2“ | 535506 | 1/2“ | 4 | 112 - 118 | 171.7 | 163 | 94 | 25 x 2.5 | M8 | 3 | 3.15 | 10 |
| FRSM 132 - 137 1/2“ | 535507 | 1/2“ | – | 132 - 137 | 190.8 | 182 | 103.5 | 25 x 2.5 | M8 | 3 | 3.15 | 10 |
| FRSM 137 - 142 1/2“ | 535508 | 1/2“ | 5 | 137 - 142 | 195.8 | 187 | 106 | 25 x 2.5 | M8 | 3 | 3.15 | 10 |
| FRSM 159 - 164 1/2“ | 535509 | 1/2“ | – | 159 - 164 | 217.9 | 209 | 117 | 25 x 2.5 | M8 | 3 | 3.15 | 8 |
| FRSM 164 - 169 1/2“ | 535511 | 1/2“ | 6 | 164 - 169 | 222.9 | 214 | 119.5 | 25 x 2.5 | M8 | 3 | 3.15 | 8 |

# Heavy duty pipe clamp FRSM - metric

The large pipe clamp with sound insulation insert for medium to heavy loads







Heavy pipe on cantilever

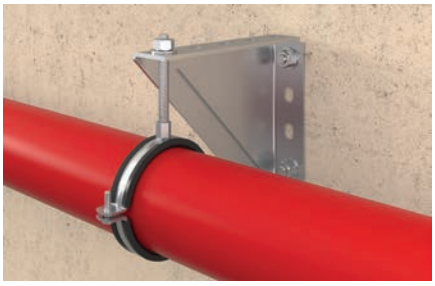

Heavy drainage pipe under angle bracket

## Applications

- Fixing of medium to heavy pipes with threaded rods or hanger bolts.
- For use in dry interior areas.

## Advantages

- High tested loads guarantee safe functioning of the FRSM.
- The combination connecting nut with thread M10 / M12, M12 / M16 or M16 allows for optimised mounting choices.
- It is possible to install the FRSM with 2 threaded rods, e.g. for the fixing of cast iron roof drainage pipes.
- The two screws allow for easy adjustment to suit the outer pipe diameter.
- The screw‘s safety features ensures trouble-free installation.

## Properties

- Material: steel DD11 (material no. 1.0332) acc. to DIN EN 10111
- Zinc plating: electro zinc-plated
- Connecting nut: M10 / M12 SW 17, M12 / M16 SW 22, M16 SW 24
- Locking screw: hexagon screw with nut
- Material sound insulation insert: EPDM; chlorine-free; silicone-free
- Temperature range: -50 °C to +110 °C
- Hardness: 45 ± 5° Shore A
- Fire behaviour: DIN 4102: Class B2

## Installation FRSM

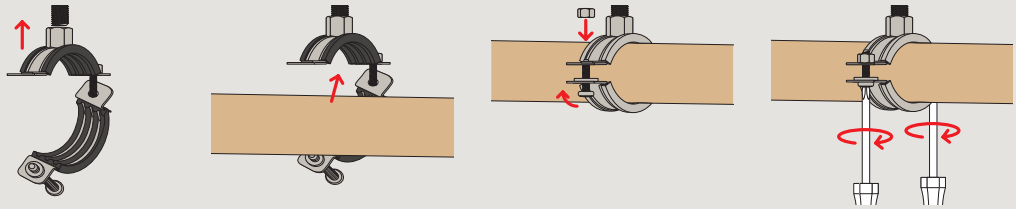

## Installation of FRSM with two threaded rods

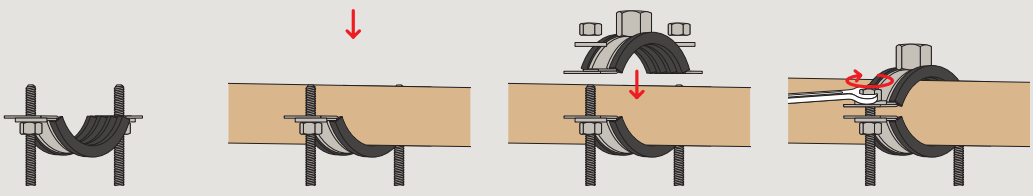

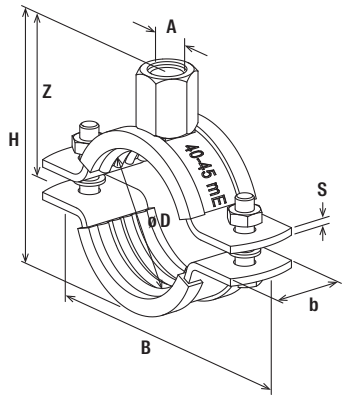


FRSM - metric

## Technical data

| Item | Item no. | Thread A | Size [in] | Clamping range D [mm] | Width B [mm] | Height H [mm] | Height Z [mm] | Width x thickness clamp band b x s [mm] | Locking screw | Installation torque $T_{inst}$ [Nm] | Max. re-com. static load (centr. tension) $N_{rec}$ [kN] | Sales unit [pcs] |
|---|---|---|---|---|---|---|---|---|---|---|---|---|
| **FRSM 19 - 23 M10/M12** | **554243** | M10 / M12 | 1/2 | 19 - 23 | 77 | 56 | 38 | 25 x 2.5 | M6 | 2 | 2.50 | 50 |
| **FRSM 24 - 29 M10/M12** | **554244** | M10 / M12 | 3/4 | 24 - 29 | 83 | 62 | 41 | 25 x 2.5 | M6 | 2 | 2.50 | 50 |
| **FRSM 33 - 36 M10/M12** | **554245** | M10 / M12 | 1 | 33 - 36 | 91 | 69 | 45 | 25 x 2.5 | M6 | 2 | 2.50 | 50 |
| **FRSM 40 - 45 M10/M12** | **554246** | M10 / M12 | 1 1/4 | 40 - 45 | 100 | 78 | 49 | 25 x 2.5 | M6 | 2 | 2.50 | 20 |
| **FRSM 47 - 52 M10/M12** | **554247** | M10 / M12 | 1 1/2 | 47 - 52 | 107 | 85 | 53 | 25 x 2.5 | M6 | 2 | 2.50 | 20 |
| **FRSM 53 - 58 M10/M12** | **554248** | M10 / M12 | – | 53 - 58 | 113 | 91 | 56 | 25 x 2.5 | M6 | 2 | 2.50 | 20 |
| **FRSM 60 - 65 M10/M12** | **554249** | M10 / M12 | 2 | 60 - 65 | 120 | 98 | 59 | 25 x 2.5 | M6 | 2 | 2.50 | 20 |
| **FRSM 73 - 78 M10/M12** | **554250** | M10 / M12 | 2 1/2 | 73 - 78 | 138 | 115 | 68 | 30 x 3.0 | M8 | 3 | 3.00 | 20 |
| **FRSM 79 - 85 M10/M12** | **554251** | M10 / M12 | – | 79 - 85 | 145 | 122 | 71 | 30 x 3.0 | M8 | 3 | 3.00 | 20 |
| **FRSM 88 - 93 M10/M12** | **554252** | M10 / M12 | 3 | 88 - 93 | 153 | 130 | 75 | 30 x 3.0 | M8 | 3 | 3.00 | 20 |
| **FRSM 100 - 106 M10/M12** | **554253** | M10 / M12 | – | 100 - 106 | 166 | 143 | 82 | 30 x 3.0 | M8 | 3 | 3.00 | 20 |
| **FRSM 108 - 116 M10/M12** | **554254** | M10 / M12 | 4 | 108 - 116 | 176 | 153 | 87 | 30 x 3.0 | M8 | 3 | 3.00 | 20 |
| **FRSM 124 - 129 M10/M12** | **093709** | M10 / M12 | – | 124 - 129 | 190 | 164 | 92 | 30 x 3.0 | M8 | 3 | 3.00 | 20 |
| **FRSM 131 - 137 M10/M12** | **093710** | M10 / M12 | – | 131 - 137 | 198 | 172 | 96 | 30 x 3.0 | M8 | 3 | 3.00 | 20 |
| **FRSM 138 - 145 M10/M12** | **093711** | M10 / M12 | 5 | 138 - 145 | 205 | 180 | 100 | 30 x 3.0 | M8 | 3 | 3.00 | 20 |
| **FRSM 156 - 162 M10/M12** | **093712** | M10 / M12 | – | 156 - 162 | 223 | 197 | 108 | 30 x 3.0 | M8 | 3 | 3.00 | 20 |
| **FRSM 165 - 171 M10/M12** | **093713** | M10 / M12 | 6 | 165 - 171 | 232 | 206 | 113 | 30 x 3.0 | M8 | 3 | 3.00 | 20 |
| **FRSM 177 - 183 M10/M12** | **558303** | M10 / M12 | – | 177 - 183 | 245 | 222 | 121 | 30 x 3.0 | M8 | 3 | 3.00 | 20 |
| **FRSM 188 - 194 M10/M12** | **093714** | M10 / M12 | 7 | 188 - 194 | 255 | 229 | 125 | 30 x 3.0 | M8 | 3 | 3.00 | 10 |
| **FRSM 196 - 203 M10/M12** | **093715** | M10 / M12 | – | 196 - 203 | 263 | 238 | 129 | 30 x 3.0 | M8 | 3 | 3.00 | 10 |
| **FRSM 205 - 214 M12/M16** | **505453** | M12 / M16 | – | 205 - 214 | 297 | 264 | 147 | 40 x 4.0 | M12 | 10 | 5.00 | 10 |
| **FRSM 219 - 225 M12/M16** | **505454** | M12 / M16 | 8 | 219 - 225 | 308 | 275 | 153 | 40 x 4.0 | M12 | 10 | 5.00 | 10 |
| **FRSM 244 - 250 M12/M16** | **505455** | M12 / M16 | – | 244 - 250 | 333 | 300 | 165 | 40 x 4.0 | M12 | 10 | 5.00 | 10 |
| **FRSM 267 - 273 M12/M16** | **505456** | M12 / M16 | 10 | 267 - 273 | 356 | 323 | 177 | 40 x 4.0 | M12 | 10 | 5.00 | 10 |
| **FRSM 277 - 283 M12/M16** | **558304** | M12 / M16 | – | 277 - 283 | 367 | 334 | 180 | 40 x 4.0 | M12 | 10 | 5.00 | 10 |
| **FRSM 297 - 304 M12/M16** | **505457** | M12 / M16 | – | 297 - 304 | 387 | 354 | 192 | 40 x 4.0 | M12 | 10 | 5.00 | 10 |
| **FRSM 305 - 316 M12/M16** | **552858** | M12 / M16 | – | 305 - 316 | 397 | 366 | 198 | 40 x 4.0 | M12 | 10 | 5.00 | 10 |
| **FRSM 320 - 328 M12/M16** | **505458** | M12 / M16 | 12 | 320 - 328 | 411 | 378 | 204 | 40 x 4.0 | M12 | 10 | 5.00 | 10 |
| **FRSM 348 - 356 M16** | **504594** | M16 | – | 348 - 356 | 480 | 403 | 213 | 50 x 5.0 | M16 | 20 | 8.00 | 1 |
| **FRSM 364 - 372 M16** | **504595** | M16 | – | 364 - 372 | 496 | 419 | 221 | 50 x 5.0 | M16 | 20 | 8.00 | 1 |
| **FRSM 400 - 409 M16** | **504596** | M16 | – | 400 - 409 | 533 | 456 | 240 | 50 x 5.0 | M16 | 20 | 8.00 | 1 |
| **FRSM 454 - 462 M16** | **504597** | M16 | – | 454 - 462 | 586 | 509 | 266 | 50 x 5.0 | M16 | 20 | 8.00 | 1 |
| **FRSM 500 - 508 M16** | **504598** | M16 | – | 500 - 508 | 632 | 555 | 290 | 50 x 5.0 | M16 | 20 | 8.00 | 1 |

# Heavy duty pipe clamp FRSMN

The two-screw pipe clamp without sound insulation insert with FM and VdS approval







Fixing of pipes

## Applications

- Fixing metal or plastic pipes without sound insulation requirements using threaded rods or stud screws, e.g. in industrial buildings.
- Fixing sprinkler pipes in accordance with FM and VdS guidelines.
- For use in dry interior areas.

## Certificates

FM APPROVED

VdS

## Advantages

- FM and VdS approval guarantees objectively tested safety for the use of sprinkler systems.
- The FRSMN without sound insulation insert is ideal for industrial applications and plastic pipes.
- The connection nuts with combination thread ensure flexibility on the construction site.
- The two-screw design enables optimised adaptation to the outer pipe diameter.
- The loss protection of the screws ensures trouble-free installation.

## Properties

- Heavy duty pipe clamp:
- Material: steel DD11 (material no. 1.0332) acc. to DIN EN 10111
- Zinc plating: electro zinc-plated
- Connection nut:
- Push-through nut M8/M10, M10/M12, M12/M16 resistance spot-welded
- Hexagonal nuts M16 SW24 and M20 SW30 half-round welded
- Hexagonal nuts M16 SW30 from diameter 316-324 all-round welded
- Locking screw: hexagonal screw with flange M6 SW10/PH3, M8 SW13/PH3. From diameter 133-140 hexagonal screw 8.8 and nut M12 SW19, M16 SW24

## Installation FRSMN

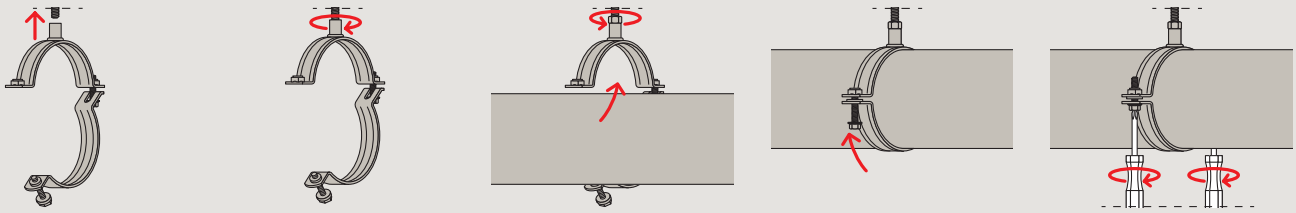

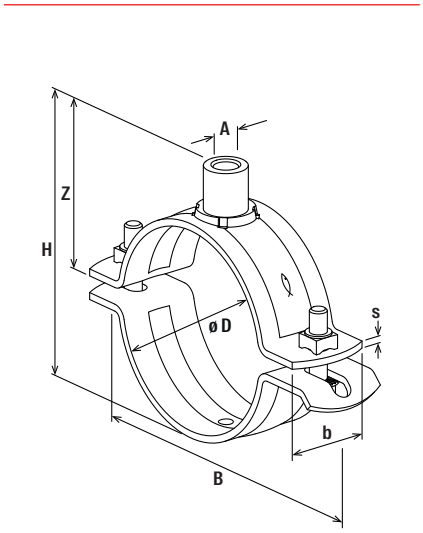


FRSMN M8-M10

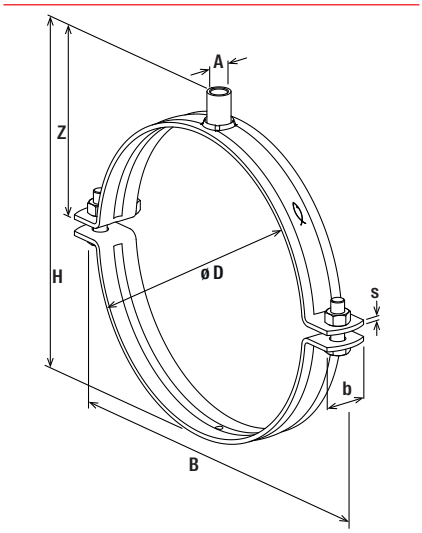


FRSMN M12-M16

## Technical data

| Item | Item no. | FM approval | VdS approval | Thread A | Size [in] | Clamping range D [mm] | Width x thickness clamp band b x s [mm] | Width B [mm] | Height H [mm] | Height Z [mm] | Locking screw | Installation torque $T_{inst}$ [Nm] | Max. recom. static load (centr. tension) $N_{rec}$ [kN] | Sales unit [pcs] |
|---|---|---|---|---|---|---|---|---|---|---|---|---|---|---|
| FRSMN 15-19 M8/M10 | 570152[1)] | – | – | M8 / M10 | 3/8 | 15 - 19 | 30 x 2.5 | 62 | 45.5 | 33.5 | M6 | 2 | 2.50 | 50 |
| FRSMN 20-24 M8/M10 | 570153 | – | Yes | M8 / M10 | 1/2 | 20 - 24 | 30 x 2.5 | 71 | 50.5 | 36 | M6 | 2 | 2.50 | 50 |
| FRSMN 25-30 M8/M10 | 570154 | Yes | Yes | M8 / M10 | 3/4 | 25 - 30 | 30 x 2.5 | 78 | 56.5 | 39 | M6 | 2 | 2.50 | 50 |
| FRSMN 31-35 M8/M10 | 570155 | Yes | Yes | M8 / M10 | 1 | 31 - 35 | 30 x 2.5 | 84 | 59 | 37.5 | M6 | 2 | 4.00 | 50 |
| FRSMN 36-41 M8/M10 | 570156 | – | Yes | M8 / M10 | – | 36 - 41 | 30 x 2.5 | 89 | 65 | 40.5 | M6 | 2 | 4.00 | 50 |
| FRSMN 40-45 M8/M10 | 570157 | Yes | Yes | M8 / M10 | 1 1/4 | 40 - 45 | 30 x 2.5 | 94 | 69 | 42.5 | M6 | 2 | 4.00 | 50 |
| FRSMN 48-53 M8/M10 | 570158 | Yes | Yes | M8 / M10 | 1 1/2 | 48 - 53 | 30 x 2.5 | 103 | 77 | 46.5 | M6 | 2 | 4.00 | 50 |
| FRSMN 55-59 M8/M10 | 570159 | – | Yes | M8 / M10 | – | 54 - 59 | 30 x 2.5 | 108 | 83 | 49.5 | M6 | 2 | 4.00 | 50 |
| FRSMN 60-65 M8/M10 | 570160 | Yes | Yes | M8 / M10 | 2 | 60 - 65 | 30 x 2.5 | 116 | 89 | 52.5 | M6 | 2 | 4.00 | 50 |
| FRSMN 67-72 M8/M10 | 570161 | – | Yes | M8 / M10 | – | 67 - 72 | 30 x 2.5 | 123 | 96 | 56 | M6 | 2 | 4.00 | 50 |
| FRSMN 76-81 M10/M12 | 570162 | Yes | Yes | M10 / M12 | 2 1/2 | 76 - 81 | 30 x 3.0 | 145.5 | 110.5 | 65.5 | M8 | 3 | 5.00 | 25 |
| FRSMN 82-85 M10/M12 | 570163[1)] | – | Yes | M10 / M12 | – | 82 - 85 | 30 x 3.0 | 153.5 | 114.5 | 67.5 | M8 | 3 | 5.00 | 25 |
| FRSMN 88-94 M10/M12 | 570164 | Yes | Yes | M10 / M12 | 3 | 88 - 94 | 30 x 3.0 | 157 | 123.5 | 72 | M8 | 3 | 5.00 | 25 |
| FRSMN 95-102 M10/M12 | 570165 | – | Yes | M10 / M12 | – | 95 - 102 | 30 x 3.0 | 168 | 131.5 | 76 | M8 | 3 | 5.00 | 25 |
| FRSMN 102-108 M10/M12 | 570166[1)] | – | Yes | M10 / M12 | – | 102 - 108 | 30 x 3.0 | 179 | 137.5 | 79 | M8 | 3 | 5.00 | 25 |
| FRSMN 110-116 M10/M12 | 570167 | Yes | Yes | M10 / M12 | 4 | 110 - 116 | 30 x 3.0 | 184 | 145.5 | 83 | M8 | 3 | 5.00 | 25 |
| FRSMN 124-129 M10/M12 | 570168[1)] | – | Yes | M10 / M12 | – | 124 - 129 | 30 x 3.0 | 199.5 | 158.5 | 89.5 | M8 | 3 | 5.00 | 25 |
| FRSMN 133-140 M12/M16 | 570169 | Yes | Yes | M12 / M16 | 5 | 133 - 140 | 40 x 4.0 | 216 | 175.5 | 100 | M12 | 10 | 8.00 | 10 |
| FRSMN 140-146 M12/M16 | 570170[1)] | – | Yes | M12 / M16 | – | 140 - 146 | 40 x 4.0 | 222 | 181.5 | 103 | M12 | 10 | 8.00 | 10 |
| FRSMN 149-155 M12/M16 | 570171[1)] | – | Yes | M12 / M16 | – | 149 - 155 | 40 x 4.0 | 232 | 190 | 107.5 | M12 | 10 | 8.00 | 10 |
| FRSMN 159-165 M12/M16 | 570173 | – | Yes | M12 / M16 | – | 159 - 165 | 40 x 4.0 | 242 | 200.5 | 112.5 | M12 | 10 | 8.00 | 10 |
| FRSMN 167-173 M12/M16 | 570174 | Yes | Yes | M12 / M16 | 6 | 167 - 173 | 40 x 4.0 | 249 | 208.5 | 116.5 | M12 | 10 | 8.00 | 10 |
| FRSMN 176-182 M12/M16 | 570128 | – | – | M12 / M16 | – | 176 - 182 | 40 x 4.0 | 258 | 217.5 | 121 | M12 | 10 | 8.00 | 10 |
| FRSMN 188-194 M12/M16 | 570129[1)] | – | – | M12 / M16 | – | 188 - 194 | 40 x 4.0 | 270 | 229.5 | 127 | M12 | 10 | 8.00 | 10 |
| FRSMN 199-205 M12/M16 | 570131 | – | – | M12 / M16 | – | 199 - 205 | 40 x 4.0 | 281 | 240.5 | 135.5 | M12 | 10 | 9.00 | 10 |
| FRSMN 207-216 M12/M16 | 570133[1)] | – | – | M12 / M16 | – | 207 - 216 | 40 x 4.0 | 292 | 251.5 | 138 | M12 | 10 | 9.00 | 10 |
| FRSMN 219-226 M12/M16 | 570134 | – | – | M12 / M16 | 8 | 219 - 226 | 40 x 4.0 | 302 | 261.5 | 143 | M12 | 10 | 9.00 | 10 |
| FRSMN 219-226 M16 VdS | 570135 | – | Yes | M16 | 8 | 219 - 226 | 40 x 4.0 | 302 | 257.5 | 139 | M12 | 10 | 9.00 | 10 |
| FRSMN 227-236 M12/M16 | 570136[1)] | – | – | M12 / M16 | – | 227 - 236 | 40 x 4.0 | 312 | 271.5 | 148 | M12 | 10 | 9.00 | 10 |
| FRSMN 244-250 M12/M16 | 570137 | – | – | M12 / M16 | – | 244 - 250 | 40 x 4.0 | 326 | 285.5 | 155 | M12 | 10 | 9.00 | 10 |
| FRSMN 251-261 M12/M16 | 570138[1)] | – | – | M12 / M16 | – | 251 - 261 | 40 x 4.0 | 337 | 296.5 | 160.5 | M12 | 10 | 9.00 | 10 |
| FRSMN 267-273 M12/M16 | 570139 | – | – | M12 / M16 | 10 | 267 - 273 | 40 x 4.0 | 349 | 308.5 | 166.5 | M12 | 10 | 9.00 | 10 |
| FRSMN 267-273 M20 VdS | 570140[1)] | – | Yes | M20 | 10 | 267 - 273 | 40 x 4.0 | 349 | 311 | 169 | M12 | 10 | 9.00 | 10 |
| FRSMN 278-284 M12/M16 | 570141[1)] | – | – | M12 / M16 | – | 278 - 284 | 40 x 4.0 | 360 | 319.5 | 172 | M12 | 10 | 9.00 | 10 |

[1)] Delivery time on request.

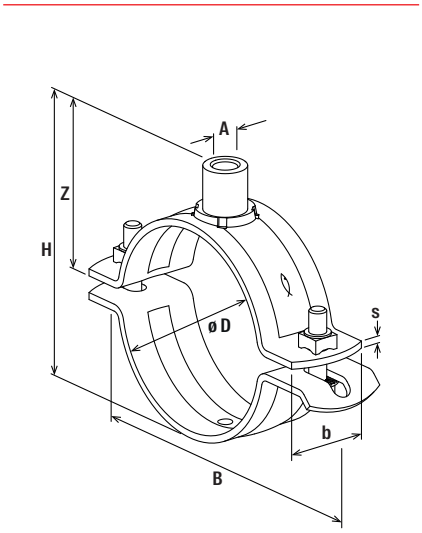


FRSMN M8-M10

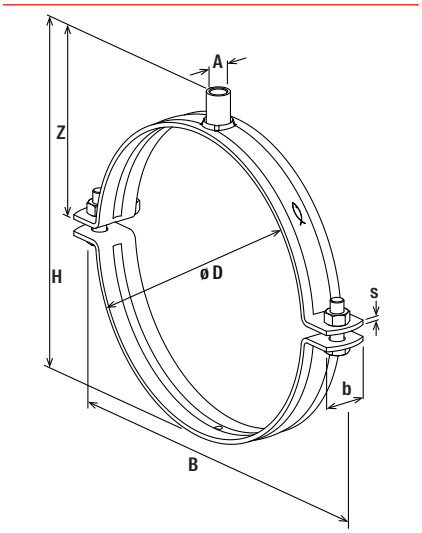


FRSMN M12-M16

## Technical data

| Item | Item no. | FM approval | VdS approval | Thread A | Size [in] | Clamping range D [mm] | Width x thickness clamp band b x s [mm] | Width B [mm] | Height H [mm] | Height Z [mm] | Locking screw | Installation torque $T_{inst}$ [Nm] | Max. recom. static load (centr. tension) $N_{rec}$ [kN] | Sales unit [pcs] |
|---|---|---|---|---|---|---|---|---|---|---|---|---|---|---|
| **FRSMN 297-304 M12/M16** | **570142**[1)] | – | – | M12 / M16 | – | 297 - 304 | 40 x 4.0 | 380 | 339.5 | 182 | M12 | 10 | 9.00 | 10 |
| **FRSMN 305-316 M12/M16** | **570143** | – | – | M12 / M16 | – | 305 - 316 | 40 x 4.0 | 392 | 351.5 | 188 | M12 | 10 | 9.00 | 10 |
| **FRSMN 316-324 M16** | **570144** | – | – | M16 | 12 | 316 - 324 | 50 x 5.0 | 431 | 358 | 191 | M16 | 20 | 15.00 | 1 |
| **FRSMN 348-356 M16** | **570145**[1)] | – | – | M16 | 13 | 348 - 356 | 50 x 5.0 | 463 | 390 | 207 | M16 | 20 | 15.00 | 1 |
| **FRSMN 360-368 M16** | **570147**[1)] | – | – | M16 | – | 360 - 368 | 50 x 5.0 | 475.5 | 402 | 213 | M16 | 20 | 15.00 | 1 |
| **FRSMN 399-407 M16** | **570148**[1)] | – | – | M16 | 16 | 399 - 407 | 50 x 5.0 | 514.5 | 441 | 232.5 | M16 | 20 | 15.00 | 1 |
| **FRSMN 411-419 M16** | **570149**[1)] | – | – | M16 | – | 411 - 419 | 60 x 8,0 | 531.5 | 459 | 241.5 | M16 | 20 | 15.00 | 1 |
| **FRSMN 500-508 M16** | **570150**[1)] | – | – | M16 | 20 | 500 - 508 | 60 x 8,0 | 620.5 | 548 | 286 | M16 | 20 | 15.00 | 1 |
| **FRSMN 513-521 M16** | **570151**[1)] | – | – | M16 | – | 513 - 521 | 60 x 8,0 | 633.5 | 561 | 292.5 | M16 | 20 | 15.00 | 1 |

[1)] Delivery time on request.

# Refrigeration pipe clamp FRSK

The variable refrigeration pipe clamp with flexible clamping range and rapid-locking-mechanism



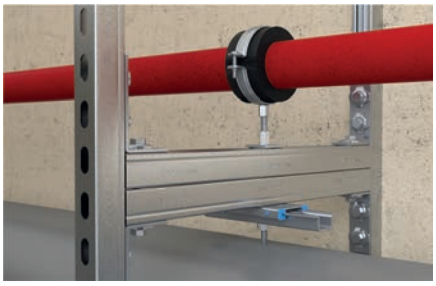

Refrigeration pipes



Refrigerant pipe clamps



## Applications

- Installation of pipes in refrigeration and air-conditioning applications.
- For use in dry interior areas.

## Advantages

- The variable clamping range compensation and two screw design allow for simple adjustment to the exterior pipe diameter, reducing the number of items required.
- The self-adhesive fastening latch ensures the ideal functioning of the refrigeration pipe clamp.
- Materials resistant to ageing ensure the FRSK offers consistent performance.
- The double-threaded connecting nut offers flexibility on the construction site.
- The loss protection on the screws allows for easy installation.
- The integrated load distribution plate ensures load transfer and allows for higher loads.

## Properties

- Material: rigid polyurethane foam, silicone-free
- Density: 80 or 120 kg/m³
- Diffusion resistance: 7000 µ
- Compressive strength: 0.67-0.75 mPa
- Thermal conductivity (at 0 °C): 0.024-0.026 W/mK
- Temperature range: -45 °C to +105 °C
- Fire behaviour: DIN 4102: Class B2
- Steel clamp: material: steel DD11 (material no. 1.0332) acc. to DIN EN 10111
- Zinc plating: electro zinc-plated
- Screw plug: oval-head screw with slot / Phillip's head combination

## Installation FRSK

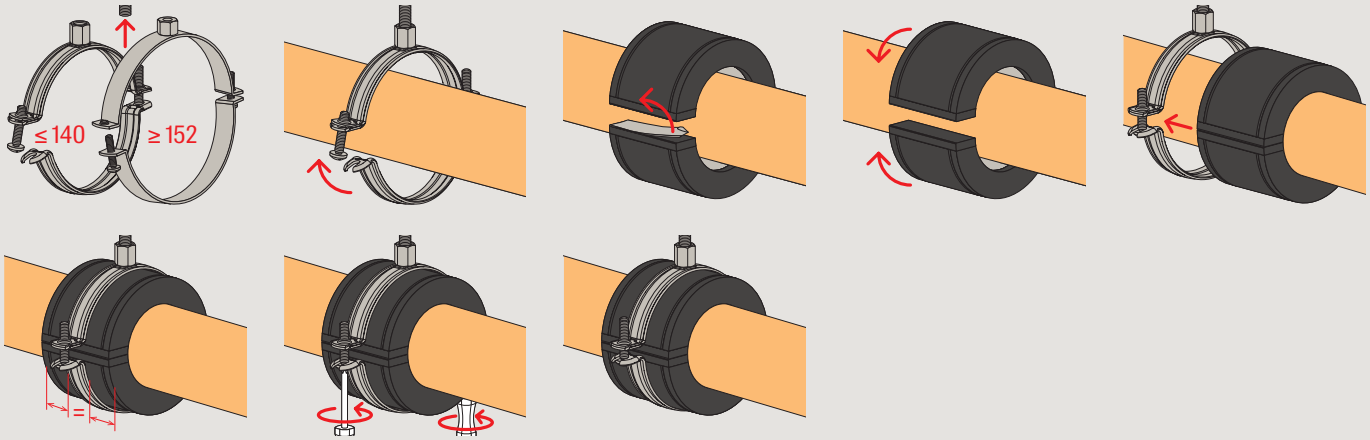

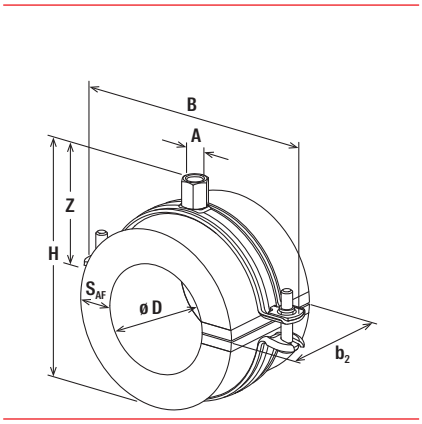


FRSK 10 - 141

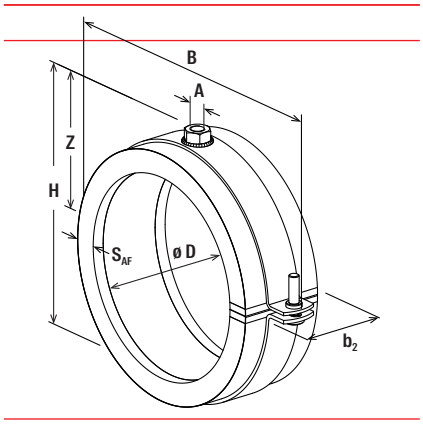


FRSK 152 - 221

## Technical data

| Item | Item no. | Thread A | Size [in] | Insulation thickness $S_{AF}$ [mm] | Width B [mm] | Height H [mm] | Height Z [mm] | Locking screw | Length of insulation material $b_2$ [mm] | Installation torque $T_{inst}$ [Nm] | Max. re-com. static load (centr. tension) $N_{rec}$ [kN] | Sales unit [pcs] |
|---|---|---|---|---|---|---|---|---|---|---|---|---|
| **FRSK 10-13 M8/M10** | **560906** | M8 / M10 | 1/4 | 19 | 83 | 69 | 42 | M5 | 72 | 2 | 0.05 | 25 |
| **FRSK 15-18 M8/M10** | **560907** | M8 / M10 | 3/8 | 19 | 90 | 76 | 45 | M5 | 72 | 2 | 0.05 | 25 |
| **FRSK 19-22 M8/M10** | **560908** | M8 / M10 | 1/2 | 19 | 90 | 76 | 45 | M5 | 72 | 2 | 0.05 | 25 |
| **FRSK 25-28 M8/M10** | **560909** | M8 / M10 | 3/4 | 19 | 97 | 83 | 49 | M5 | 72 | 2 | 0.08 | 25 |
| **FRSK 32-35 M8/M10** | **560970** | M8 / M10 | 1 | 19 | 120 | 100 | 57 | M6 | 72 | 2 | 0.10 | 20 |
| **FRSK 38-41 M8/M10** | **560971** | M8 / M10 | – | 19 | 120 | 100 | 57 | M6 | 72 | 2 | 0.12 | 20 |
| **FRSK 42-45 M8/M10** | **560972** | M8 / M10 | 1 1/4 | 19 | 120 | 100 | 57 | M6 | 72 | 2 | 0.20 | 20 |
| **FRSK 48-52 M8/M10** | **560973** | M8 / M10 | 1 1/2 | 19 | 130 | 109 | 62 | M6 | 42 | 2 | 0.24 | 20 |
| **FRSK 54-57 M8/M10** | **560974** | M8 / M10 | – | 19 | 139 | 118 | 66 | M6 | 42 | 2 | 0.27 | 20 |
| **FRSK 60-64 M8/M10** | **560975** | M8 / M10 | 2 | 19 | 139 | 118 | 66 | M6 | 52 | 2 | 0.37 | 20 |
| **FRSK 67-70 M8/M10** | **560976** | M8 / M10 | – | 19 | 146 | 125 | 70 | M6 | 52 | 2 | 0.51 | 20 |
| **FRSK 73-76 M8/M10** | **560977** | M8 / M10 | 2 1/2 | 19 | 156 | 135 | 75 | M6 | 52 | 2 | 0.61 | 10 |
| **FRSK 89-92 M8/M10** | **560978** | M8 / M10 | 3 | 19 | 176 | 156 | 86 | M6 | 52 | 2 | 0.79 | 10 |
| **FRSK 101-104 M8/M10** | **560979** | M8 / M10 | – | 19 | 184 | 164 | 90 | M6 | 62 | 2 | 0.98 | 10 |
| **FRSK 108-110 M8/M10** | **560980** | M8 / M10 | – | 19 | 192 | 172 | 94 | M6 | 62 | 2 | 1.15 | 10 |
| **FRSK 114-115 M8/M10** | **560981** | M8 / M10 | 4 | 19 | 192 | 172 | 94 | M6 | 62 | 2 | 1.17 | 10 |
| **FRSK 125-127 M8/M10** | **560982** | M8 / M10 | – | 19 | 211 | 190 | 103 | M6 | 62 | 2 | 1.39 | 10 |
| **FRSK 130-133 M8/M10** | **560983** | M8 / M10 | – | 19 | 211 | 190 | 103 | M6 | 62 | 2 | 1.48 | 5 |
| **FRSK 139-141 M8/M10** | **560984** | M8 / M10 | 5 | 19 | 219 | 199 | 106 | M6 | 62 | 2 | 1.56 | 5 |
| **FRSK 152-154 M12** | **560985** | M12 | – | 19 | 246 | 208 | 109 | M8 | 62 | 3 | 1.72 | 5 |
| **FRSK 159-160 M12** | **560986** | M12 | – | 19 | 255 | 214 | 112 | M8 | 62 | 3 | 1.77 | 5 |
| **FRSK 168-170 M12** | **560987** | M12 | 6 | 19 | 262 | 224 | 117 | M8 | 72 | 3 | 2.26 | 5 |
| **FRSK 190-194 M12** | **560988** | M12 | – | 19 | 284 | 248 | 129 | M8 | 82 | 3 | 3.04 | 4 |
| **FRSK 200-204 M12** | **560989** | M12 | – | 19 | 292 | 258 | 134 | M8 | 82 | 3 | 3.20 | 4 |
| **FRSK 219-221 M12** | **560990** | M12 | 8 | 19 | 311 | 275 | 142.5 | M8 | 82 | 3 | 3.44 | 4 |

# Refrigeration pipe clamp KFT

The two-screw refrigeration pipe clamp made from closed PUR foam





Refrigerant pipe clamps

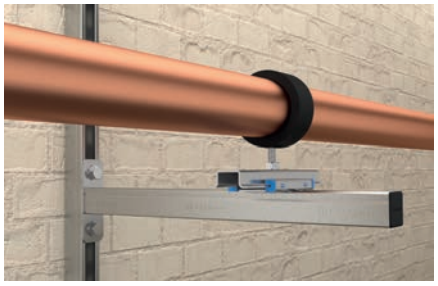

Refrigerant pipe clamp on sliding element



## Applications

- Installation of pipes in refrigeration and air-conditioning applications with high loads.
- For use in dry interior areas.

## Advantages

- The refrigeration pipe clamp KFT made from closed PUR foam can be used with all standard insulation materials.
- The glued rubber overlay makes the installation easier.
- The triple-threaded connection nut M8/ M10/½“ allows for flexibility during the installation.
- Age-resistant material ensures the long-term functionality of the KFT.
- The two screws allow an easy adjustment to suit the outer pipe diameter.

## Properties

- Material: closed-cell polyurethane foam, silicone-free
- Diffusion resistance: 1000 µ
- Density: 250 kg/m$^3$
- Compression strength: 3,96 mPa at 23 °C
- Heat conductivity (at 0 °C): 0,049 W/(m*K)
- Temperature range: -160 °C to +130 °C
- Fire behaviour: DIN 4102: Class B2

## Installation KFT

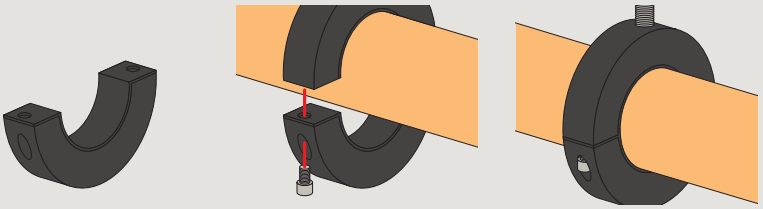

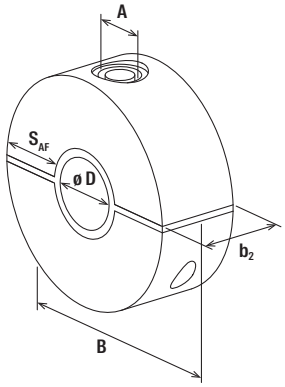


KFT

## Technical data

| Item | Item no. | Thread<br>A | Internal diameter<br>D<br>[mm] | Width<br>B<br>[mm] | Locking screw | Insulation thickness<br>$S_{AF}$<br>[mm] | Length of insulation material<br>$b_2$<br>[mm] | Installation torque<br>$T_{inst}$<br>[Nm] | Max. recom. static load (centr. tension)<br>$N_{rec}$<br>[kN] | Sales unit<br>[pcs] |
|---|---|---|---|---|---|---|---|---|---|---|
| **KFT 9,5** | **505576** | M8 / M10 / 1/2“ | 9.5 | 88 | M6 | 30 | 40 | 2 | 0.15 | 1 |
| **KFT 12,7** | **505577** | M8 / M10 / 1/2“ | 12.7 | 88 | M6 | 30 | 40 | 2 | 0.53 | 1 |
| **KFT 15,8** | **505578** | M8 / M10 / 1/2“ | 15.8 | 88 | M6 | 30 | 40 | 2 | 0.21 | 1 |
| **KFT 17,2** | **505579** | M8 / M10 / 1/2“ | 17.2 | 88 | M6 | 30 | 40 | 2 | 0.21 | 1 |
| **KFT 18,0** | **505580** | M8 / M10 / 1/2“ | 18 | 88 | M6 | 30 | 40 | 2 | 0.21 | 1 |
| **KFT 19,5** | **505581** | M8 / M10 / 1/2“ | 19.5 | 88 | M6 | 30 | 40 | 2 | 0.21 | 1 |
| **KFT 21,3** | **505582** | M8 / M10 / 1/2“ | 21.3 | 88 | M6 | 30 | 40 | 2 | 0.26 | 1 |
| **KFT 22,0** | **505583** | M8 / M10 / 1/2“ | 22 | 88 | M6 | 30 | 40 | 2 | 0.26 | 1 |
| **KFT 26,9** | **505584** | M8 / M10 / 1/2“ | 26.9 | 88 | M6 | 30 | 40 | 2 | 0.32 | 1 |
| **KFT 28,0** | **505585** | M8 / M10 / 1/2“ | 28 | 88 | M6 | 30 | 40 | 2 | 0.32 | 1 |
| **KFT 33,7** | **505587** | M8 / M10 / 1/2“ | 33.7 | 96 | M6 | 30 | 40 | 2 | 0.40 | 1 |
| **KFT 35,0** | **505588** | M8 / M10 / 1/2“ | 35 | 96 | M6 | 30 | 40 | 2 | 0.42 | 1 |
| **KFT 40,0** | **505589** | M8 / M10 / 1/2“ | 40 | 100 | M6 | 30 | 40 | 2 | 0.42 | 1 |
| **KFT 41,2** | **505591** | M8 / M10 / 1/2“ | 41.2 | 100 | M6 | 30 | 40 | 2 | 0.51 | 1 |
| **KFT 42,4** | **505592** | M8 / M10 / 1/2“ | 42.4 | 103 | M6 | 30 | 40 | 2 | 0.51 | 1 |
| **KFT 44,5** | **505593** | M8 / M10 / 1/2“ | 44.5 | 103 | M6 | 30 | 40 | 2 | 0.51 | 1 |
| **KFT 48,3** | **505594** | M8 / M10 / 1/2“ | 48.3 | 102 | M6 | 30 | 40 | 2 | 0.58 | 1 |
| **KFT 50,0** | **505595** | M8 / M10 / 1/2“ | 50 | 112 | M6 | 30 | 40 | 2 | 0.60 | 1 |
| **KFT 54,0** | **505596** | M8 / M10 / 1/2“ | 54 | 116 | M6 | 30 | 40 | 2 | 0.62 | 1 |
| **KFT 57,0** | **505597** | M8 / M10 / 1/2“ | 57 | 116 | M6 | 30 | 40 | 2 | 0.65 | 1 |
| **KFT 60,3** | **505598** | M8 / M10 / 1/2“ | 60.3 | 123 | M6 | 30 | 50 | 2 | 0.72 | 1 |
| **KFT 64,0** | **505599** | M8 / M10 / 1/2“ | 64 | 123 | M6 | 30 | 50 | 2 | 0.77 | 1 |
| **KFT 70,0** | **505901** | M8 / M10 / 1/2“ | 70 | 132 | M8 | 30 | 50 | 3 | 3.50 | 1 |
| **KFT 74,0** | **505902** | M8 / M10 / 1/2“ | 74 | 132 | M8 | 30 | 50 | 3 | 3.50 | 1 |
| **KFT 76,1** | **505903** | M8 / M10 / 1/2“ | 76.1 | 132 | M8 | 30 | 50 | 3 | 1.37 | 1 |
| **KFT 80,0** | **505904** | M8 / M10 / 1/2“ | 80 | 132 | M8 | 30 | 50 | 3 | 1.37 | 1 |
| **KFT 84,0** | **505905** | M8 / M10 / 1/2“ | 84 | 150 | M8 | 30 | 50 | 3 | 1.60 | 1 |
| **KFT 88,9** | **505906** | M8 / M10 / 1/2“ | 88.9 | 150 | M8 | 30 | 50 | 3 | 1.60 | 1 |
| **KFT 92,1** | **505907** | M8 / M10 / 1/2“ | 92.1 | 150 | M8 | 30 | 50 | 3 | 1.60 | 1 |
| **KFT 101,0** | **505908** | M8 / M10 / 1/2“ | 101 | 188 | M8 | 40 | 60 | 3 | 2.59 | 1 |
| **KFT 104,0** | **505909** | M8 / M10 / 1/2“ | 104 | 188 | M8 | 40 | 60 | 3 | 2.59 | 1 |
| **KFT 108,0** | **505910** | M8 / M10 / 1/2“ | 108 | 188 | M8 | 40 | 60 | 3 | 2.59 | 1 |
| **KFT 114,3** | **505911** | M8 / M10 / 1/2“ | 114.3 | 195 | M8 | 40 | 60 | 3 | 2.74 | 1 |
| **KFT 129,0** | **505914** | M8 / M10 / 1/2“ | 129 | 220 | M8 | 40 | 60 | 3 | 3.19 | 1 |
| **KFT 133,0** | **505915** | M8 / M10 / 1/2“ | 133 | 220 | M8 | 40 | 60 | 3 | 3.19 | 1 |
| **KFT 139,7** | **505916** | M8 / M10 / 1/2“ | 139.7 | 220 | M8 | 40 | 60 | 3 | 3.35 | 1 |
| **KFT 154,0** | **505917** | M12 / 1/2“ | 154 | 239 | M10 | 40 | 60 | 5 | 3.83 | 1 |
| **KFT 159,0** | **505918** | M12 / 1/2“ | 159 | 239 | M10 | 40 | 60 | 5 | 3.83 | 1 |
| **KFT 168,3** | **505919** | M12 / 1/2“ | 168.3 | 250 | M10 | 40 | 60 | 5 | 4.04 | 1 |
| **KFT 193,7** | **505920** | M16 / 3/4“ | 193.7 | 340 | M10 | 60 | 100 | 5 | 5.26 | 1 |

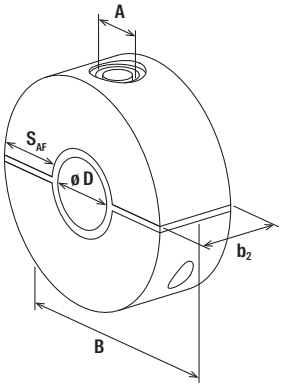


KFT

## Technical data

| | Item no. | Thread<br>A | Internal diameter<br>D<br>[mm] | Width<br>B<br>[mm] | Locking screw | Insulation thickness<br>$S_{AF}$<br>[mm] | Length of insulation material<br>$b_2$<br>[mm] | Installation torque<br>$T_{inst}$<br>[Nm] | Max. recom. static load (centr. tension)<br>$N_{rec}$<br>[kN] | Sales unit<br>[pcs] |
|---|---|---|---|---|---|---|---|---|---|---|
| **Item** | | | | | | | | | | |
| **KFT 204,0** | **505921** | M16 / 3/4“ | 204 | 340 | M10 | 60 | 100 | 5 | 5.20 | 1 |
| **KFT 219,1** | **505922** | M16 / 3/4“ | 219.1 | 340 | M10 | 60 | 100 | 5 | 5.26 | 1 |

# Refrigeration clamp KFS

The refrigeration pipe clamp made from closed PUR foam for big pipelines





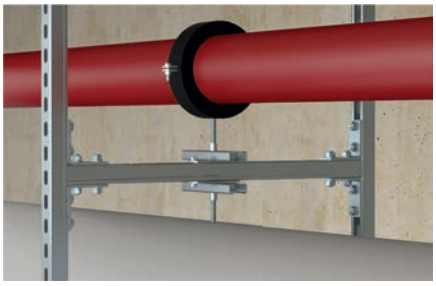

Cold running media lines

## Applications

- Cooling lines
- Refrigeration lines
- Cold running media lines
- For use in dry interior areas.

## Advantages

- The KFS Refrigeration clamp made of closed PUR foam can be used with all common insulation materials.
- The design of the KFS Refrigeration clamp with external screw holes enables it to support high loads.
- Age-resistant material ensures consistent function of the KFT.
- The glued-in rubber pad reduces the assembly effort due to optimal adjustment.

## Properties

- Material: closed-cell polyurethane foam, silicone-free, halogen-free
- Density: 250 kg/m³
- Heat conductivity: 0.045 W/(m*K)
- Fire behaviour: DIN 4102: Class B2
- Diffusion resistance: >1000 µ
- Compressive strength: 3,96 mPa at 23 °C
- Temperature range: -50 °C to +105 °C
- Material: steel DD11 (material no. 1.0332) acc. to DIN EN 10111
- Zinc plating: electro zinc-plated

## Installation KFS

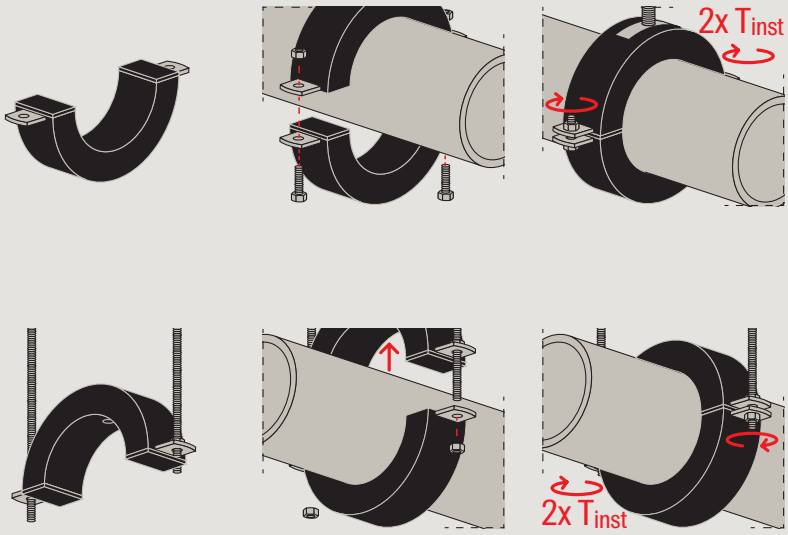

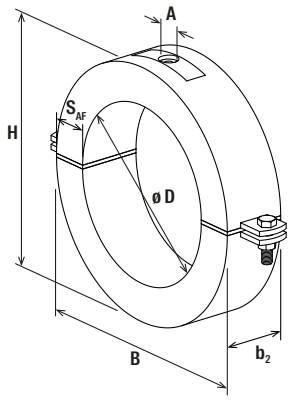


KFS

## Technical data

| Item | Item no. | Thread<br>A | Size<br>[in] | Insulation thickness<br>$S_{AF}$<br>[mm] | Width<br>B<br>[mm] | Height<br>H<br>[mm] | Locking screw | Length of insulation material<br>$b_2$<br>[mm] | Clamping range<br>D<br>[mm] | Installation torque<br>$T_{inst}$<br>[Nm] | Max. re-com. static load (centr. tension)<br>$N_{rec}$<br>[kN] | Sales unit<br>[pcs] |
|---|---|---|---|---|---|---|---|---|---|---|---|---|
| **KFS 273** | **567798** | M16 | 10 | 60 | 493 | 393 | M16 | 100 | 273 | 45 | 7.00 | 2 |
| **KFS 323** | **567799** | M20 | 12 | 60 | 544 | 444 | M16 | 100 | 324 | 45 | 11.00 | 2 |
| **KFS 355** | **567800**[1)] | M20 | 14 | 60 | 576 | 476 | M16 | 100 | 356 | 45 | 12.00 | 1 |
| **KFS 368** | **567801**[1)] | M20 | – | 60 | 588 | 488 | M16 | 120 | 368 | 45 | 13.00 | 1 |
| **KFS 406** | **567802**[1)] | M24 | 16 | 60 | 646 | 526 | M16 | 120 | 406 | 45 | 16.50 | 1 |
| **KFS 457** | **567803**[1)] | M24 | 18 | 60 | 697 | 577 | M16 | 120 | 457 | 45 | 19.00 | 1 |
| **KFS 508** | **567804**[1)] | M24 | 20 | 60 | 748 | 628 | M16 | 120 | 508 | 45 | 21.00 | 1 |
| **KFS 609** | **567805**[1)] | M24 | 24 | 60 | 848 | 729 | M16 | 140 | 609 | 45 | 28.50 | 1 |

[1)] delivery on request

# Sprinkler loop hanger FRSP

The flexible sprinkler loop with FM and UL approval







Sprinkler pipe installation

## Applications

- Installation of sprinkler pipes.
- Used for the suspension of stationary, non-insulated pipelines.
- For use in dry interior areas.

## Certificates

FM APPROVED

UL

## Advantages

- For easy installation of sprinkler pipes from ½“ to 8“ for a wide range of applications.
- Simple assembly by inserting, hanging and adjusting the pipes. Saves time during installation.
- Simple height adjustment by means of a height-adjustable connecting nut.
- The sprinkler loop hanger has FM and UL approval ensuring safe application.

## Properties

- Material: steel Q235B
- Zinc plating: electro zinc-plated

## Installation FRSP

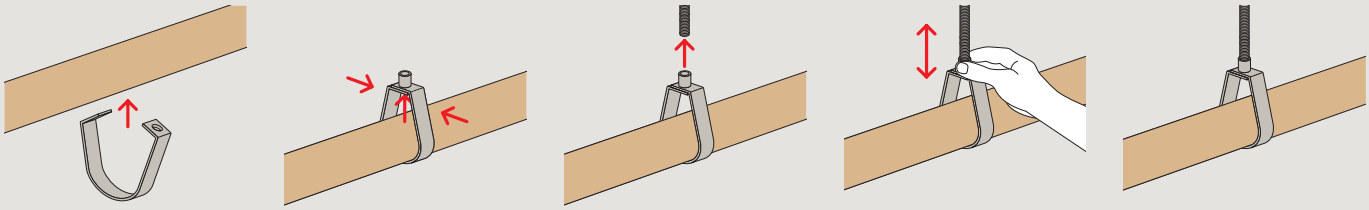

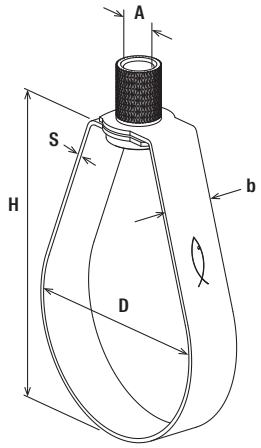


FRSP

## Technical data

| Item | Item no. | FM approval | UL approval | Thread A | Size [in] | Height H [mm] | Clamping range D [mm] | Width x thickness clamp band b x s [mm] | Max. recom. static load (centr. tension) $N_{rec}$ [kN] | Sales unit [pcs] |
|---|---|---|---|---|---|---|---|---|---|---|
| **FRSP 1/2“** | **516662** | – | Yes | M10 | 1/2 | 55 | 29.5 | 16 x 1.2 | 2.00 | 100 |
| **FRSP 3/4“** | **516663** | Yes | Yes | M10 | 3/4 | 62 | 30.5 | 16 x 1.2 | 2.00 | 100 |
| **FRSP 1“** | **516664** | Yes | Yes | M10 | 1 | 70 | 37 | 16 x 1.2 | 2.00 | 100 |
| **FRSP 1 1/4“** | **516665** | Yes | Yes | M10 | 1 1/4 | 78 | 45.7 | 16 x 1.2 | 2.00 | 100 |
| **FRSP 1 1/2“** | **516666** | Yes | Yes | M10 | 1 1/2 | 83 | 52 | 16 x 1.2 | 2.40 | 100 |
| **FRSP 2“** | **516667** | Yes | Yes | M10 | 2 | 93 | 64 | 16 x 1.2 | 2.90 | 100 |
| **FRSP 2 1/2“** | **516668** | Yes | Yes | M10 | 2 1/2 | 126 | 77 | 19 x 2.2 | 3.90 | 60 |
| **FRSP 3“** | **516669** | Yes | Yes | M10 | 3 | 147 | 92.8 | 19 x 2.2 | 4.90 | 60 |
| **FRSP 4“** | **516670** | Yes | Yes | M10 | 4 | 180 | 118.5 | 19 x 2.2 | 6.80 | 24 |
| **FRSP 5“** | **532356** | Yes | Yes | M12 | 5 | 210 | 224.3 | 19 x 2.5 | 9.20 | 24 |
| **FRSP 6“** | **516671** | Yes | Yes | M12 | 6 | 251 | 145.8 | 19 x 3.0 | 12.00 | 24 |
| **FRSP 8“** | **516672** | Yes | Yes | M12 | 8 | 301 | 173 | 19 x 3.0 | 17.40 | 12 |

# Sprinkler loop hanger FRLH

The premium sprinkler loop with divisible strap and height adjustment, VdS and FM approved







Sprinkler pipe installation to trapezoidal metal sheet

## Applications

- Installation of sprinkler pipes according to VdS and FM guidelines.
- For use in dry interior areas.

## Certificates

FM APPROVED

VdS

## Advantages

- The VdS and FM approval guarantees objectively tested safety for use in sprinkler systems.
- The regulating nut as a connection nut enables easy subsequent height adjustment of the cables.

## Properties

- Material sprinkler loop: steel DX51D+Z140MA acc. to DIN EN 10364/10143
- Zinc plating: sendzimir galvanised
- Material regulating nut: steel 11SMnPb37 (material no. 1.0737), acc. to DIN EN 10087
- Zinc plating: electro zinc-plated

## Installation FRLH

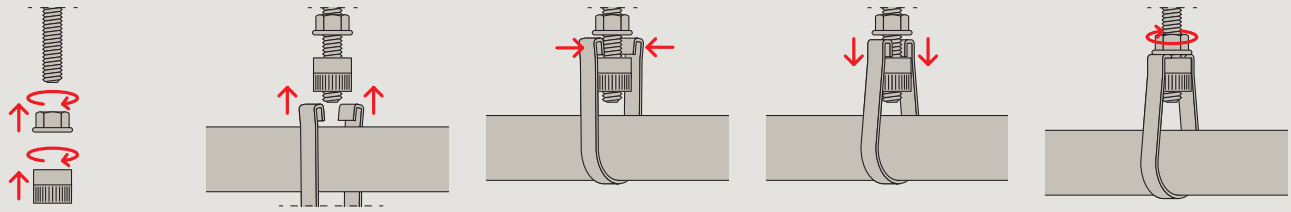

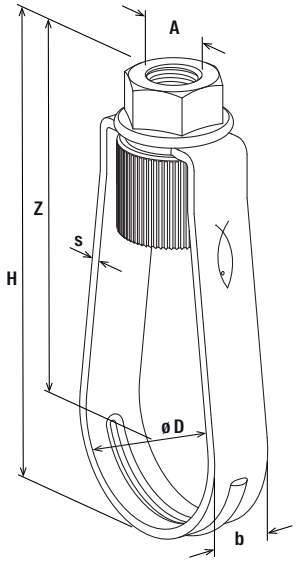


FRLH to 1“

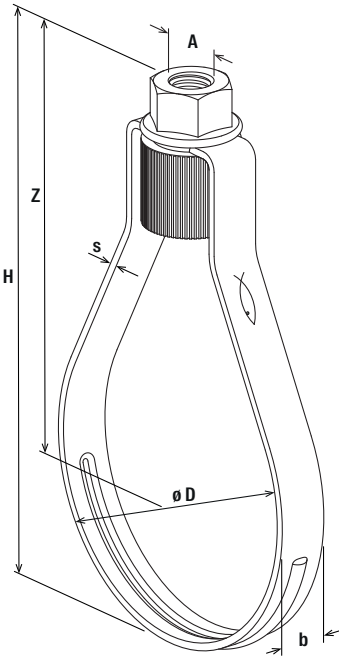


FRLH from 1 1/4“

## Technical data

| Item | Item no. | FM approval | VdS approval | Size [in] | Thread A | Clamping range D [mm] | Height H [mm] | Height Z [mm] | Width x thickness clamp band b x s [mm] | Max. recom. static load (centr. tension) $N_{rec}$ [kN] | Sales unit [pcs] |
|---|---|---|---|---|---|---|---|---|---|---|---|
| **FRLH 1/2“ M8** | **570175** | No | Yes | 1/2 | M8 | 21.3 | 76 | 64 | 12 x 1.5 | 4.00 | 50 |
| **FRLH 3/4“ M8** | **570176** | No | Yes | 3/4 | M8 | 26.9 | 80 | 65 | 12 x 1.5 | 4.00 | 50 |
| **FRLH 3/4“ M10** | **570177**[1] | Yes | Yes | 3/4 | M10 | 26.9 | 82 | 67 | 12 x 1.5 | 4.00 | 50 |
| **FRLH 1“ M8** | **570178** | No | Yes | 1 | M8 | 33.7 | 83 | 65 | 12 x 1.5 | 4.00 | 50 |
| **FRLH 1“ M10** | **570179** | Yes | Yes | 1 | M10 | 33.7 | 85 | 67 | 12 x 1.5 | 4.00 | 50 |
| **FRLH 1 1/4“ M8** | **570180** | No | Yes | 1 1/4 | M8 | 42.4 | 88 | 65 | 12 x 1.5 | 4.00 | 50 |
| **FRLH 1 1/4“ M10** | **570181** | Yes | Yes | 1 1/4 | M10 | 42.4 | 90 | 67 | 12 x 1.5 | 4.00 | 50 |
| **FRLH 1 1/2“ M8** | **570182** | No | Yes | 1 1/2 | M8 | 48.3 | 96 | 70 | 12 x 1.5 | 4.00 | 50 |
| **FRLH 1 1/2“ M10** | **570183** | Yes | Yes | 1 1/2 | M10 | 48.3 | 98 | 72 | 12 x 1.5 | 4.00 | 50 |
| **FRLH 2“ M8** | **570184** | No | Yes | 2 | M8 | 60.3 | 112 | 80 | 12 x 1.5 | 4.00 | 50 |
| **FRLH 2“ M10** | **570186** | Yes | Yes | 2 | M10 | 60.3 | 114 | 82 | 12 x 1.5 | 4.00 | 50 |
| **FRLH 2 1/2“ M10** | **570187** | Yes | Yes | 2 1/2 | M10 | 76.1 | 140 | 99 | 15 x 2,5 | 6.00 | 25 |
| **FRLH 3“ M10** | **570188** | Yes | Yes | 3 | M10 | 88.9 | 161 | 114 | 15 x 2,5 | 6.00 | 25 |
| **FRLH 4“ M10** | **570189** | Yes | Yes | 4 | M10 | 114.3 | 205 | 145 | 15 x 2,5 | 6.00 | 25 |
| **FRLH 5“ M12** | **570240** | Yes | Yes | 5 | M12 | 139.7 | 235 | 163 | 15 x 2,5 | 8.00 | 25 |
| **FRLH 6“ M12** | **570241** | Yes | Yes | 6 | M12 | 168.3 | 287 | 200 | 15 x 2,5 | 8.00 | 25 |
| **FRLH 8“ M16** | **570242** | Yes | Yes | 8 | M16 | 219.1 | 364 | 252 | 20 x 2.5 | 10.00 | 10 |
| **FRLH 10“ M20** | **570243**[1] | No | Yes | 10 | M20 | 273 | 470 | 330 | 20 x 3,0 | 11.00 | 1 |

[1] Delivery time on request.

# Sprinkler loop hanger FCHS

The universal sprinkler loop with FM and UL approval





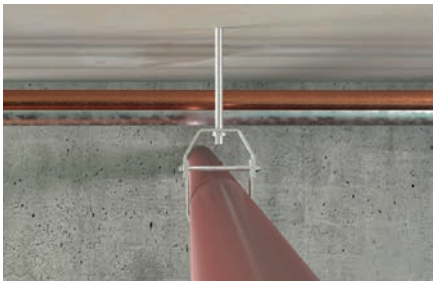

Sprinkler pipe installation

## Applications

- Installation of sprinkler pipes.
- Used for the suspension of stationary, non-insulated pipelines.
- For use in dry interior areas.

## Advantages

- For easy installation of sprinkler lines from ½“ to 12“ for a wide range of applications.
- Swivel clamp band to absorb movements in the sprinkler system.
- The sprinkler loop hanger has FM and UL approval ensuring safe application.

## Properties

- Material: steel Q235B
- Zinc plating: electro zinc-plated

## Certificates

FM APPROVED

UL

## Installation FCHS

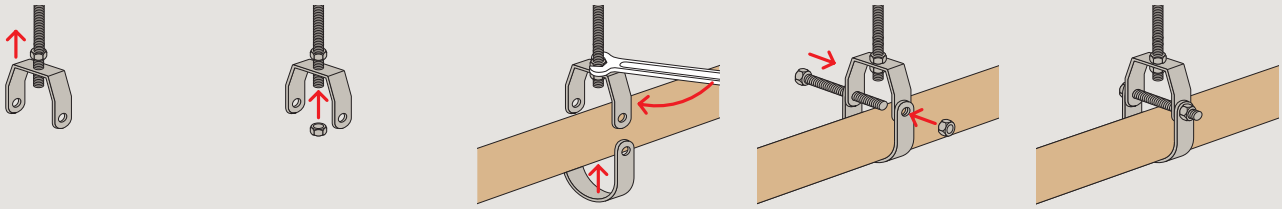

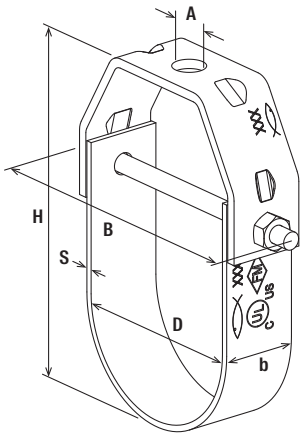


FCHS

## Technical data

| Item | Item no. | FM approval | UL approval | Size [in] | Hole-Ø A [mm] | Clamping range D [mm] | Height H [mm] | Width B [mm] | Width x thickness clamp band b x s [mm] | Max. recom. static load (centr. tension) $N_{rec}$ [kN] | Sales unit [pcs] |
|---|---|---|---|---|---|---|---|---|---|---|---|
| **FCHS 1/2“** | **532187** | Yes | Yes | 1/2“ | 10.5 | 19 - 23 | 51 | 49 | 19 x 2.0 | 3.00 | 150 |
| **FCHS 3/4“** | **532190** | Yes | Yes | 3/4“ | 10.5 | 24 - 29 | 58 | 55 | 19 x 2.0 | 3.00 | 120 |
| **FCHS 1“** | **532195** | Yes | Yes | 1“ | 10.5 | 33 - 37 | 70 | 61 | 19 x 2.0 | 3.00 | 120 |
| **FCHS 1 1/4“** | **532197** | Yes | Yes | 1 1/4“ | 10.5 | 40 - 45 | 84 | 74 | 25 x 2.0 | 3.00 | 56 |
| **FCHS 1 1/2“** | **532198** | Yes | Yes | 1 1/2 | 10.5 | 47 - 52 | 100 | 80 | 25 x 2.0 | 3.00 | 56 |
| **FCHS 2“** | **516695** | Yes | Yes | 2“ | 10.5 | 60 - 65 | 114 | 93 | 25 x 2.0 | 3.00 | 56 |
| **FCHS 2 1/2“** | **516696** | Yes | Yes | 2 1/2“ | 13.5 | 73 - 78 | 133 | 107 | 22 x 1.5 | 5.00 | 60 |
| **FCHS 3“** | **516697** | Yes | Yes | 3“ | 13.5 | 88 - 93 | 153 | 126 | 22 x 1.5 | 5.00 | 48 |
| **FCHS 4“** | **516699** | Yes | Yes | 4“ | 16.8 | 108 - 116 | 192 | 158 | 30 x 3.0 | 5.00 | 24 |
| **FCHS 5“** | **516700** | Yes | Yes | 5“ | 16.8 | 138 - 145 | 238 | 213 | 30 x 4.0 | 6.00 | 24 |
| **FCHS 6“** | **516701** | Yes | Yes | 6“ | 20.5 | 165 - 172 | 272 | 248 | 38 x 5.0 | 9.00 | 12 |
| **FCHS 8“** | **516702** | Yes | Yes | 8“ | 20.5 | 219 - 225 | 333 | 305 | 38 x 5.0 | 9.00 | 6 |
| **FCHS 10“** | **516703** | – | – | 10“ | 24 | 267 - 273 | 400 | 372 | 50 x 6.0 | 16.00 | 2 |
| **FCHS 12“** | **516704** | – | – | 12“ | 24 | 320 - 328 | 479 | 426 | 50 x 6.0 | 16.00 | 2 |

# Riser clamp RCWR

RCWR riser pipe clamps for secure fixing of vertical riser pipes with UL certification





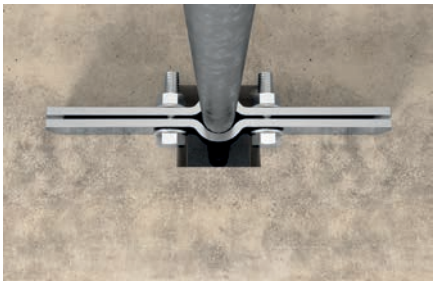

Floorcrossing downpipe

## Applications

- Secure fixing of vertical pipelines.
- For use in dry interior areas.

## Certificates

## Advantages

- Usable for all kinds of pipes.
- Suitable sizes for pipe diameters of ½“ to 8“.
- Easy installation using hexagonal screws and nuts.
- Safe for use thanks to UL certification.

## Properties

- Material: steel Q235B
- Zinc plating: electro zinc-plated

## Installation RCWR

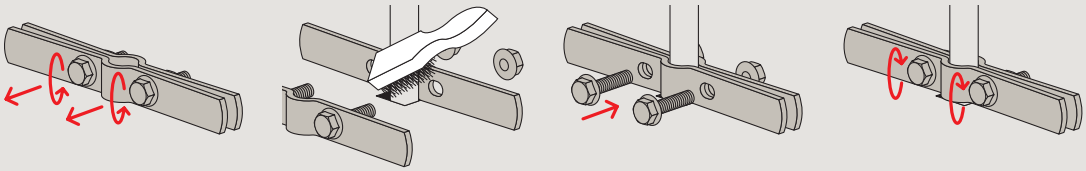

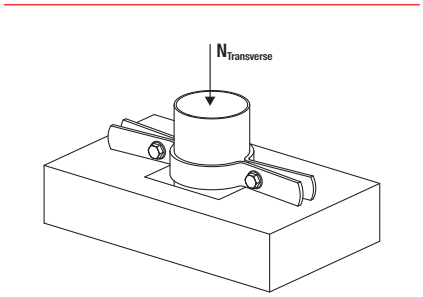


RCWR

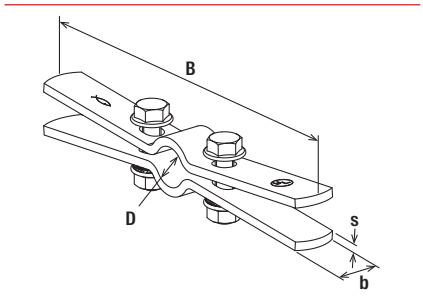


RCWR

## Technical data

| Item | Item no. | UL approval | Clamping range D [mm] | Width B [mm] | Width x thickness clamp band b x s [mm] | Max. recommended transverse tensile load $N_{transverse}$ [kN] | Sales unit [pcs] |
|---|---|---|---|---|---|---|---|
| **RCWR 1/2“** | **516673** | Yes | 22 | 215 | 25 x 5.0 | 3.3 | 35 |
| **RCWR 3/4“** | **516674** | Yes | 28 | 229 | 25 x 5.0 | 3.3 | 30 |
| **RCWR 1“** | **516675** | Yes | 34 | 230 | 25 x 5.0 | 3.3 | 25 |
| **RCWR 1 1/4“** | **516676** | Yes | 43 | 241 | 25 x 5.0 | 3.3 | 25 |
| **RCWR 1 1/2“** | **516677** | Yes | 49 | 251 | 25 x 3.0 | 3.3 | 25 |
| **RCWR 2“** | **516678** | Yes | 62 | 262 | 30 x 5.0 | 3.3 | 25 |
| **RCWR 2 1/2“** | **532380** | Yes | 75 | 281 | 30 x 5.0 | 3.7 | 25 |
| **RCWR 3“** | **516679** | Yes | 91 | 299 | 30 x 5.0 | 4.6 | 20 |
| **RCWR 4“** | **516680** | Yes | 116 | 329 | 38 x 6.0 | 6.6 | 12 |
| **RCWR 5“** | **516681** | Yes | 144 | 362 | 38 x 6.0 | 8.9 | 12 |
| **RCWR 6“** | **516682** | Yes | 171 | 394 | 50 x 6.0 | 11.5 | 8 |
| **RCWR 8“** | **516683** | Yes | 223 | 464 | 50 x 9.5 | 18.0 | 4 |

# U-Clamp FUBD

The easy handling pipe and cable clamp for direct attachment of lines to FUS mounting channels







Supply lines fixed to FUS channel

## Applications

- Fast installation of metal and plastic pipes, flexible plastic pipes or cables without sound insulation requirements directly to FUS installation channels.
- Fits to FUS channels FUS 21, FUS 41, FUS 62, FUS 21D, FUS 41D, FUS 62D.
- For use in dry interior areas.

## Advantages

- The FUBD without soundproofing is ideal for use in industrial applications, for example, for fixing lightweight flexible supply lines in the immediate area of production machines.
- Locking screw with hexagonal and slot drive.
- Quick adaptation to the desired outside pipe diameter by fastening the pressure pan.
- No loss of parts due to preassembled parts.
- Time- and cost-saving installation without the need of accessories like threaded rods or sliding nuts.

## Properties

- Material U-Strap: steel S235JRC (material no. 1.0122) acc. to EN 10025
- Zinc plating U-Strap: hot-dip galvanised
- Material pressure pan: steel DX51D acc. to DIN EN 10346
- Zinc plating pressure pan: electro zinc-plated
- Material locking screw: steel 4.6 acc. to EN 20898-1
- Locking screw: with hexagonal SW10 and slot head

## Installation FUBD

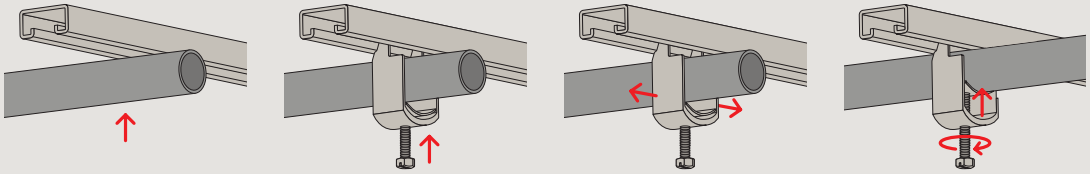

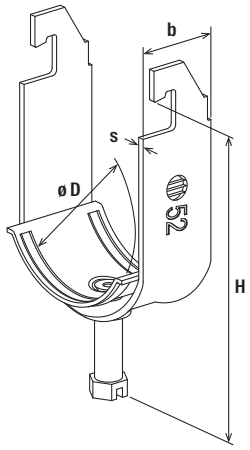


FUBD

## Technical data

| Item | Item no. | Clamping range D [mm] | Height H [mm] | Width x thickness clamp band b x s [mm] | Locking screw | Sales unit [pcs] |
|---|---|---|---|---|---|---|
| **FUBD 40** | **539564**[1)] | 36 - 40 | 71 | 25 x 1.75 | M6 | 100 |
| **FUBD 48** | **558148** | 44 - 48 | 85 | 25 x 2.0 | M8 | 50 |
| **FUBD 52** | **539566** | 48 - 52 | 90 | 25 x 2.0 | M8 | 50 |
| **FUBD 60** | **539567**[1)] | 56 - 60 | 98 | 30 x 2.25 | M8 | 50 |
| **FUBD 76** | **539568**[1)] | 70 - 76 | 113 | 30 x 2.75 | M8 | 25 |
| **FUBD 94** | **539569**[1)] | 88 - 94 | 141 | 30 x 2.75 | M8 | 20 |
| **FUBD 100** | **539570**[1)] | 94 - 100 | 147 | 30 x 2.75 | M8 | 10 |

[1)] Delivery time on request.

# U-Bolt ETR

The U-Bolt with metric thread





## Applications

- Installation of standing or hanging pipes.
- Pipe routing on profiles and consoles.
- For use in dry interior areas.

## Advantages

- The U-Bolt's two screws allow an ideal adaptation to suit the outer pipe diameter.

## Properties

- Material: steel with min. tensile strength of 360 N/mm²
- Zinc plating: electro zinc-plated

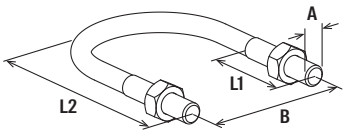


ETR

## Technical data

| Item | Item no. | Thread A | Length L1 [mm] | Length L2 [mm] | Size [in] | Width B [mm] | Sales unit [pcs] |
|---|---|---|---|---|---|---|---|
| ETR 8 - 13 | 024415 | M6 | 20 | 30 | 1/4 | 20 | 10 |
| ETR 12 - 17 | 024416 | M6 | 20 | 35 | 3/8 | 24 | 10 |
| ETR 15 - 21 | 024417 | M6 | 25 | 40 | 1/2 | 28 | 10 |
| ETR 20 - 27 | 024418 | M8 | 32 | 50 | 3/4 | 36 | 10 |
| ETR 26 - 34 | 024419 | M8 | 32 | 55 | 1 | 43 | 10 |
| ETR 33 - 42 | 024420 | M8 | 38 | 68 | 1 1/4 | 51 | 10 |
| ETR 40 - 49 | 024421 | M8 | 38 | 70 | 1 1/2 | 58 | 10 |
| ETR 50 - 60 | 024422 | M8 | 40 | 80 | 2 | 69 | 10 |
| ETR 60 - 70 | 024423 | M10 | 43 | 100 | – | 82 | 10 |
| ETR 66 - 76 | 024424 | M10 | 50 | 110 | 2 1/2 | 88 | 10 |
| ETR 70 - 82 | 024425 | M10 | 50 | 115 | – | 94 | 10 |
| ETR 80 - 90 | 024426 | M10 | 50 | 115 | 3 | 102 | 10 |
| ETR 90 - 102 | 024427 | M12 | 55 | 145 | 3 1/2 | 116 | 5 |
| ETR 100 - 108 | 024428 | M12 | 50 | 150 | – | 122 | 5 |
| ETR 102 - 114 | 024429 | M12 | 60 | 156 | 4 | 128 | 5 |
| ETR 121 - 127 | 024430 | M12 | 60 | 170 | – | 141 | 5 |

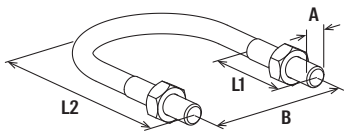


ETR

## Technical data



| Item | Item no. | Thread A | Length L1 [mm] | Length L2 [mm] | Size [in] | Width B [mm] | Sales unit [pcs] |
|---|---|---|---|---|---|---|---|
| **ETR 126 - 133** | **024431** | M12 | 70 | 180 | – | 147 | 5 |
| **ETR 131 - 140** | **024432** | M14 | 70 | 185 | 5 | 156 | 5 |
| **ETR 143 - 153** | **024433** | M14 | 70 | 193 | – | 169 | 5 |
| **ETR 150 - 159** | **024434** | M14 | 70 | 200 | – | 175 | 5 |
| **ETR 168** | **024435** | M14 | 70 | 210 | 6 | 184 | 5 |
| **ETR 193,7** | **024436** | M14 | 70 | 232 | – | 209 | 5 |
| **ETR 219** | **024437** | M14 | 70 | 270 | 8 | 236 | 5 |

# U-Bolt connector FETR-C

U-Bolt connector FETR-C for connecting ETR U-Bolts to FUS channels



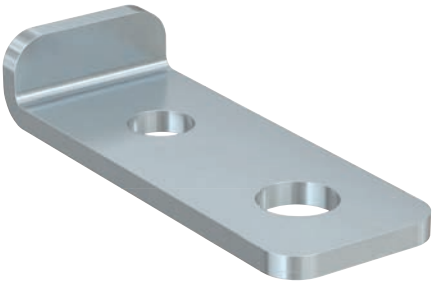



Pipe on cantilever arm with U-bolt ETR and channel connector FETR-C



Pipe on cantilever arm with U-bolt ETR and channel connector FETR-C

## Applications

- U-Bolt connector for use with mounting channels FUS in combination with U-Bolt ETR.
- For indoor and outdoor application.

## Advantages

- The FETR-C enables the connection of U-Bolts ETR to mounting channels FUS and allows free positioning of the ETR on the FUS channel profiles.
- Independent positioning of ETR without taking into account the hole pattern of the FUS channel profiles.

## Properties

- Material: steel S235JR (material no. 1.0038) acc. to DIN EN 10025
- Zinc plating: hot-dip galvanised acc. to DIN EN ISO 1461

## Installation FETR-C

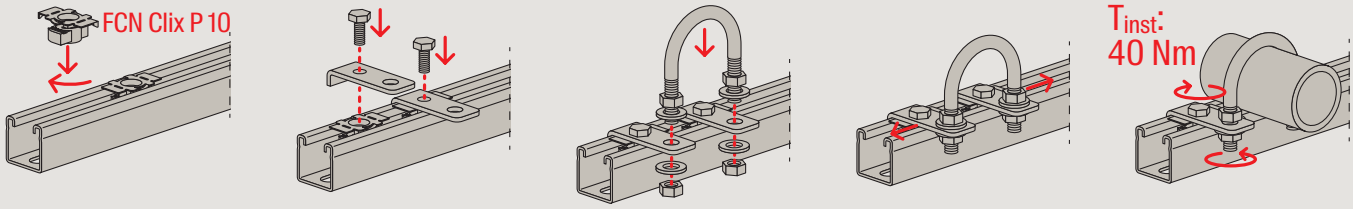


**See also:**

Product family hexagonal nut MU Page 289



**See also:**

Product family Washer U Page 288



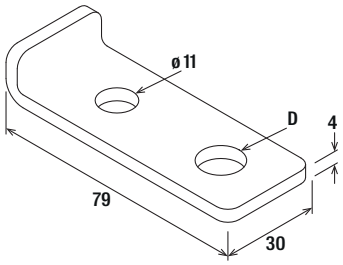


FETR-C



## Technical data

| Item | Item no. | Hole-Ø D [mm] | Sales unit [pcs] |
|---|---|---|---|
| **FETR-C 9 hdg** | **569182** | 9 | 20 |
| **FETR-C 13 hdg** | **569183** | 13 | 20 |
| **FETR-C 16.5 hdg** | **569184** | 16.5 | 20 |

# Hose clamp SGS

The hose clamp for large hoses, pipe or ducting







Outlet valve with hose

## Applications

- Sealing of hoses.
- Fixing hoses to adapters.

## Advantages

- The crimped band edges offer protection against damage to the hose.
- The short base of the hosing allows an ideal adjustment and high, radial forces on the hose diameter.
- The screw's combination cross-drive thread enables installation flexibility.

## Properties

- Material class: W2
- Worm: CQ 15 (material no. 1.1132) acc. to DIN EN 10263
- Housing and band: chromium steel (material no. 1.4016) acc. to DIN EN 10088 or equivalent corrosion-resistant steel

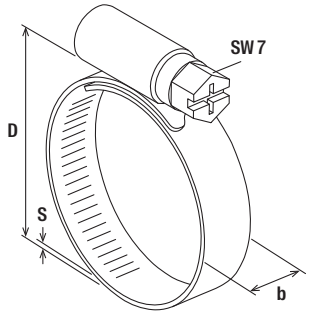


SGS

## Technical data

| Item | Item no. | Clamping range D [mm] | Width x thickness clamp band b x s [mm] | Sales unit [pcs] |
|---|---|---|---|---|
| SGS 9 W2 8 - 12 | 045517 | 8 - 12 | 9.0 x 0.6 | 100 |
| SGS 9 W2 10 - 16 | 045518 | 10 - 16 | 9.0 x 0.6 | 100 |
| SGS 9 W2 12 - 20 | 045519 | 12 - 20 | 9.0 x 0.6 | 100 |
| SGS 9 W2 16 - 27 | 045520 | 16 - 27 | 9.0 x 0.6 | 100 |
| SGS 9 W2 20 - 32 | 045521 | 20 - 32 | 9.0 x 0.6 | 100 |
| SGS 9 W2 25 - 40 | 045522 | 25 - 40 | 9.0 x 0.6 | 100 |
| SGS 9 W2 32 - 50 | 045523 | 32 - 50 | 9.0 x 0.6 | 100 |
| SGS 9 W2 40 - 60 | 045524 | 40 - 60 | 9.0 x 0.6 | 25 |
| SGS 9 W2 50 - 70 | 045525 | 50 - 70 | 9.0 x 0.6 | 25 |
| SGS 9 W2 60 - 80 | 045526 | 60 - 80 | 9.0 x 0.6 | 25 |

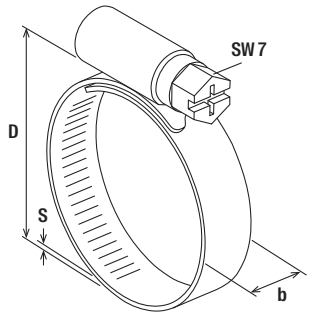


SGS

## Technical data

| Item | Item no. | Clamping range D [mm] | Width x thickness clamp band b x s [mm] | Sales unit [pcs] |
|---|---|---|---|---|
| **SGS 9 W2 70 - 90** | **045527** | 70 - 90 | 9.0 x 0.6 | 25 |
| **SGS 9 W2 80 -100** | **045528** | 80 - 100 | 9.0 x 0.6 | 25 |
| **SGS 9 W2 90 -110** | **045529** | 90 - 110 | 9.0 x 0.6 | 25 |
| **SGS 9 W2 100 -120** | **045530** | 100 - 120 | 9.0 x 0.6 | 25 |
| **SGS 9 W2 110 -130** | **045531** | 110 - 130 | 9.0 x 0.6 | 25 |
| **SGS 9 W2 120 -140** | **045532** | 120 - 140 | 9.0 x 0.6 | 25 |

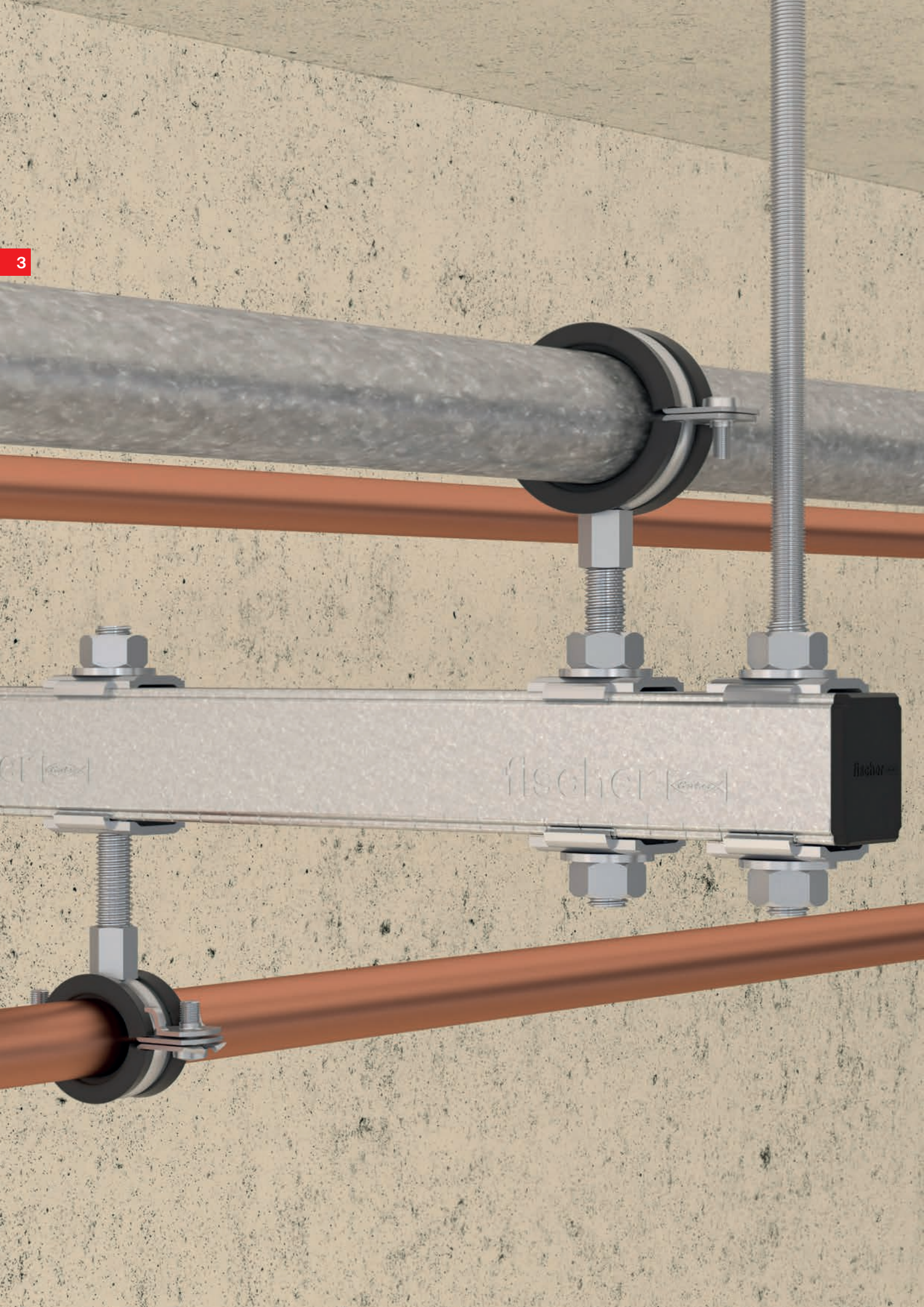
3
fischer

# 3

# Light channel system FLS




| | | |
|---|---|---|
| Channel FLS | 84 |  |
| FLS Cutting Tool | 87 |  |
| Cantilever arm ALK | 89 |  |
| Cover cap AK | 92 |  |
| Angle brace WS 31-45° | 93 |  |
| Channel connector SV 31 | 95 |  |
| Sliding channel nut FSM Clix P | 97 |  |
| Sliding channel nut FSM Clix M | 99 |  |
| T-head bolt FHS Clix | 101 |  |
| Saddle flange SF Clix 31 | 104 |  |
| Angle bracket MW Clix 90° | 106 |  |
| Angle bracket MW and MWU | 108 |  |
| Channel washer HK 31 | 110 | 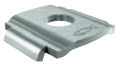 |
| Beam clamp TKR 31 | 111 |  |

# Channel FLS

The flexible channel system for light applications







Air duct fixing with channel

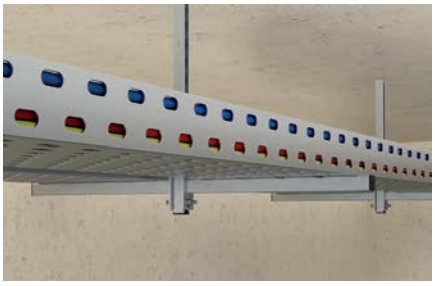

Cable duct

## Applications

- The U-profile channels enable the creation of secure, horizontal and vertical installations.
- The channel system is suitable for fast and efficient fixings of pipelines and supporting structures.
- For use in dry interior areas.

## Certificates

R 120

R 30 MLAR

## Advantages

- The fire inspection report in line with MLAR/EN1363-1 of the FLS 37 guarantees independently tested functional safety.
- The channel shape with edge seams gives a perfect fit for the connector elements and leads to a safe and easy installation.
- The serration with stamped teeth in the mounting channel gives the sliding nuts a secure hold to bear high shear loads.
- The scale on the channels simplifies the cutting of the channels and the positioning of the connector elements during installation.
- The alternating long slots in the channel enable the optimised fixing to the substrate with the perfect fixtures.

## Properties

- Material: pre-galvanised steel S250GD+Z275 (material no. 1.0242) acc. to DIN EN 10346

## Installation FLS

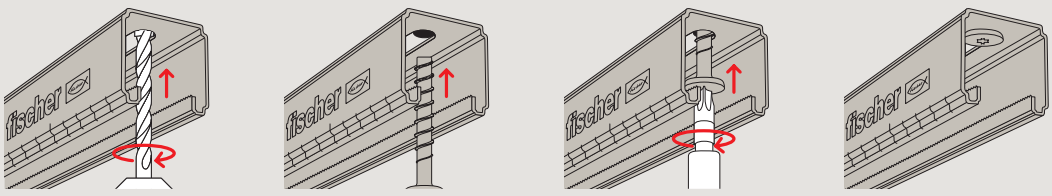

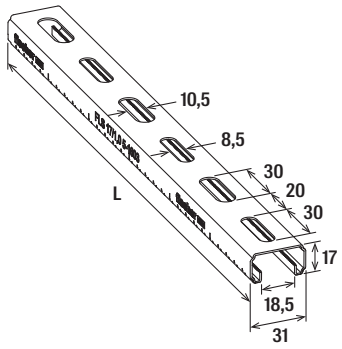


FLS 17/1.0

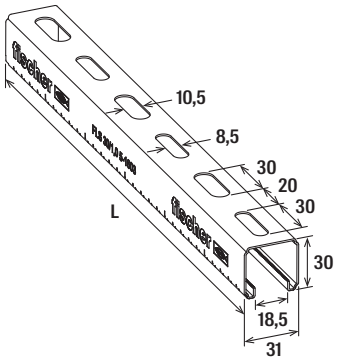


FLS 30/1.0

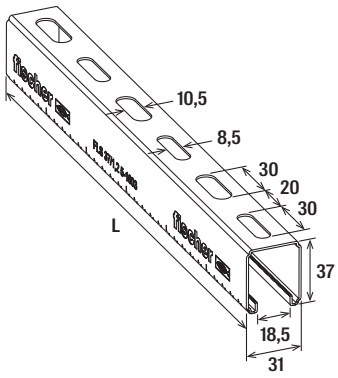


FLS 37/1.2

## Technical data

| Item | Item no. | Fire test report | Thickness S [mm] | Length L [mm] | Sales unit [pcs] |
|---|---|---|---|---|---|
| FLS 17/1.0 - 2 m | 572539 | – | 1.0 | 2,000 | 8 |
| FLS 17/1.0 - 3 m | 572540 | – | 1.0 | 3,000 | 8 |
| FLS 30/1.0 - 2 m | 572541 | – | 1.0 | 2,000 | 8 |
| FLS 30/1.0 - 3 m | 572542 | – | 1.0 | 3,000 | 8 |
| FLS 37/1.2 - 2 m | 572543 | Yes | 1.2 | 2,000 | 8 |
| FLS 37/1.2 - 3 m | 572544 | Yes | 1.2 | 3,000 | 8 |
| FLS 37/1.2 - 6 m | 572545 | Yes | 1.2 | 6,000 | 1 |

For load information under fire exposure, see chapter Basic knowledge.

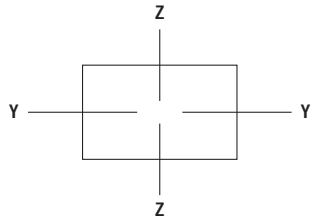


## Loads

| Item | Item no. | Profile weight [kg/m] | Channel cross section [$cm^2$] | Moment of inertia $I_y$ [$cm^4$] | Moment of inertia $I_z$ [$cm^4$] | Section modulus $W_y$ [$cm^3$] | Section modulus $W_z$ [$cm^3$] | Max. recommended static load for 1m length $F_{rec}$ [kN] | Sales unit [pcs] |
|---|---|---|---|---|---|---|---|---|---|
| FLS 17/1.0 - 2 m | 572539 | 0.58 | 0.72 | 0.25 | 0.91 | 0.26 | 0.59 | 0.13 | 8 |
| FLS 17/1.0 - 3 m | 572540 | 0.58 | 0.72 | 0.25 | 0.91 | 0.26 | 0.59 | 0.41 | 8 |
| FLS 30/1.0 - 2 m | 572541 | 0.78 | 0.98 | 1.02 | 1.46 | 0.64 | 0.94 | 0.48 | 8 |
| FLS 30/1.0 - 3 m | 572542 | 0.78 | 0.98 | 1.02 | 1.46 | 0.64 | 0.94 | 0.48 | 8 |
| FLS 37/1.2 - 2 m | 572543 | 1.06 | 1.33 | 2.03 | 2.01 | 1.04 | 1.29 | 0.78 | 8 |
| FLS 37/1.2 - 3 m | 572544 | 1.06 | 1.33 | 2.03 | 2.01 | 1.04 | 1.29 | 0.78 | 8 |
| FLS 37/1.2 - 6 m | 572545 | 1.06 | 1.33 | 2.03 | 2.01 | 1.04 | 1.29 | 0.78 | 1 |

## Load case 1

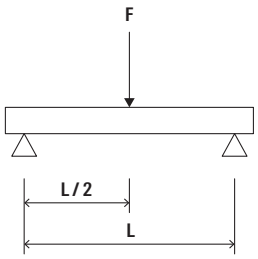


## Load case 2

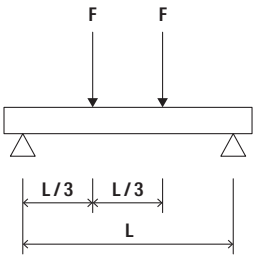


## Load case 3

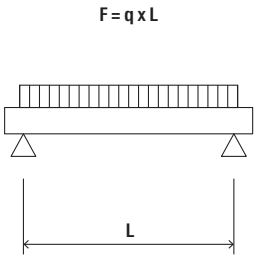


3

## FLS 17/1,0

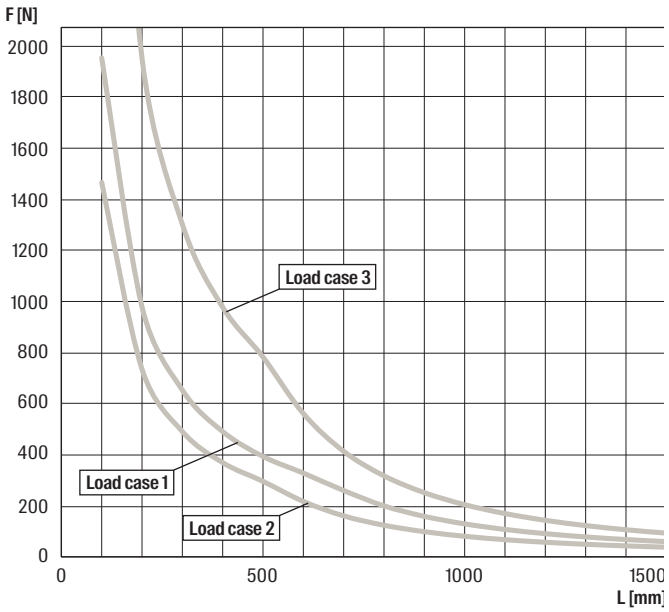


## FLS 30/1,0

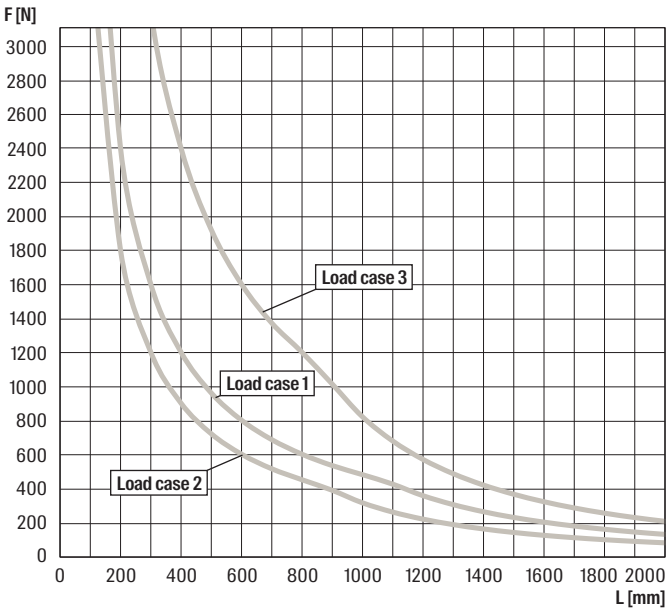


For the load curves, the permissible steel strain $\delta_{adm.}$ = 188 N/mm (increased steel strain due to bending)and the maximum deflection under load L/200 are not exceeded. Fixings and screw fastenings must be calculated accordingly. The higher yield strength is a result of the calculation according to DIN EN 1993-1-3:2010-12, para. 3.2.2.

## FLS 37/1,2

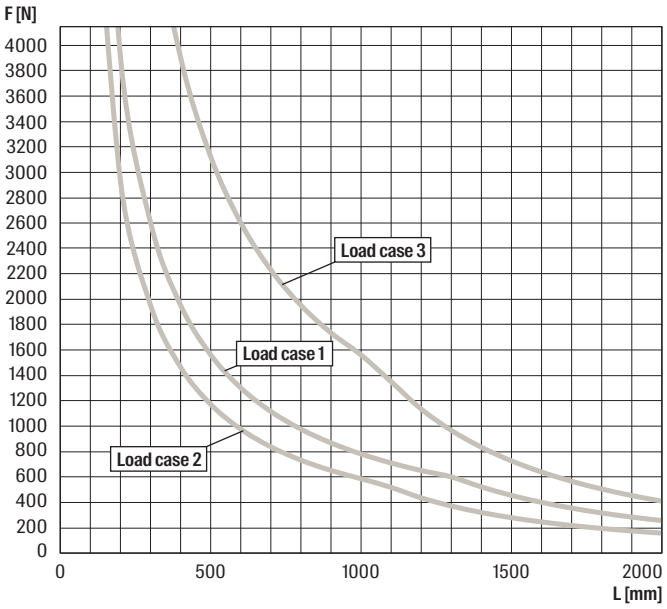


For the load curves, the permissible steel strain $\delta_{adm.}$ = 188 N/mm (increased steel strain due to bending)and the maximum deflection under load L/200 are not exceeded. Fixings and screw fastenings must be calculated accordingly. The higher yield strength is a result of the calculation according to DIN EN 1993-1-3:2010-12, para. 3.2.2.

# FLS Cutting Tool

The Cutting Tool for FLS channels







Air duct fixing with channel

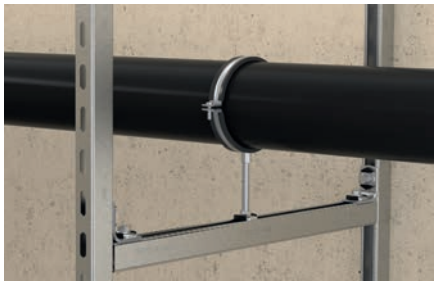

Pipe fixing on frame construction

## Applications

- Efficient cutting of the FLS channels to the required length for processing in the installation.

## Advantages

- The FLS cutting tool for the three FLS channel sizes guarantees the most economical type of channel cutting, including length measurement by the integrated 1m-measuring unit.
- Simple burr-free cutting instead of sawing the channel profile to avoid the complex and time consuming reworking of the edges.
- The cutting process avoids falling metal chips as during the sawing process for a dirt free workplace.
- The manual cutting tool, which is always ready for use, allows an almost noiseless use.
- Due to the profile-shaped openings in the cutting tool, incorrect use is permanently avoided.

## Properties

- Material: tempered tooling steel

## Installation FLS cutting tool

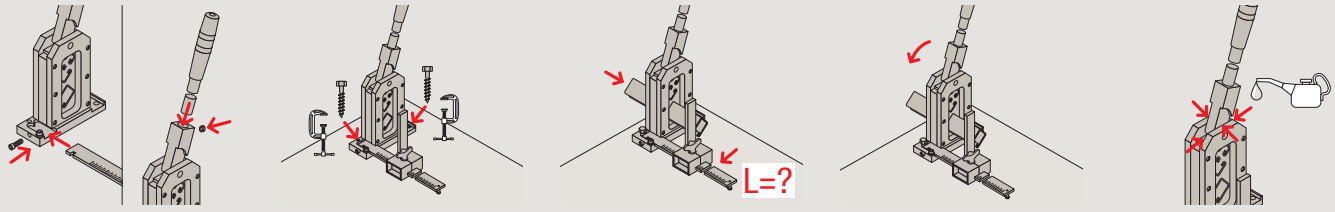

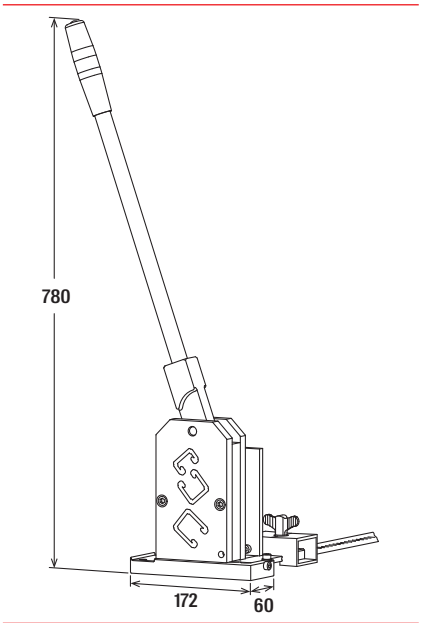


FLS

## Technical data

| | Item no. | Performance data | Sales unit [pcs] |
|---|---|---|---|
| **Item** | | | |
| **FLS cutting tool** | **543965** | Incl. Operating lever and 1m measuring unit for length adjustment | 1 |

# Cantilever arm ALK

Cantilever arm made from FLS channel profile

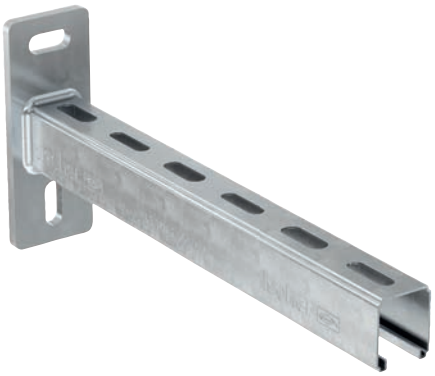

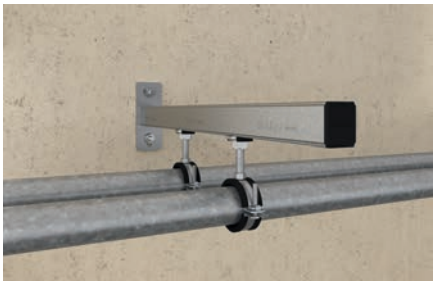

Light pipe fixing



Cable tray on cantilever arm



## Applications

- Economic installation of single pipes or pipelines along the wall.
- For use in dry interior areas.

## Certificates

R 120

R 30 MLAR

## Advantages

- The fire inspection report in line with MLAR/EN1363-1 of the ALK 37 guarantees independently tested functional safety.
- The graduated range of lengths allows an ideal adaptation to the application.
- The console‘s stable base plate offers a secure hold for a load-bearing construction.
- The base plate‘s long slots, which are at 90° to one another, allow the console to be easily aligned.

## Properties

- Material base plate: steel E295 (material no. 1.0050) acc. to DIN EN 10025-2
- Material channel: steel S215G (material no. 1.0116G) acc. to DIN 1623
- Zinc plating: electro zinc-plated

**See also:**



Product family Rubber inlay EMS Page 260

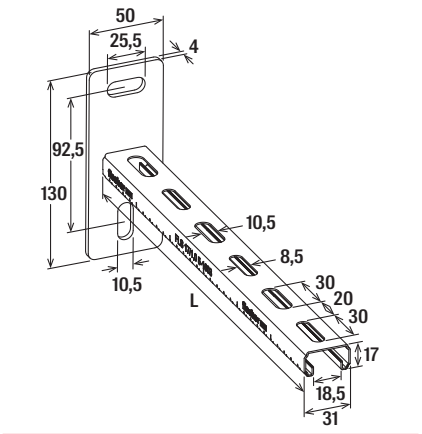


ALK 17

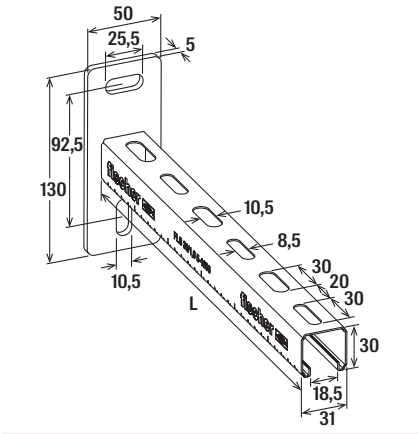


ALK 30

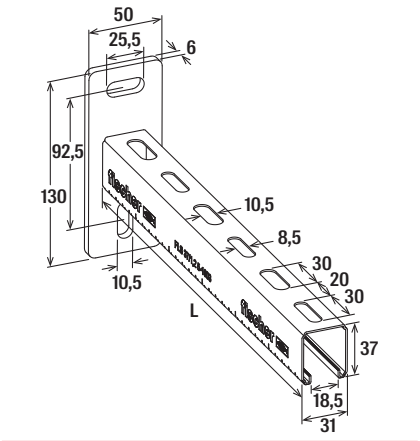


ALK 37

## Technical data

| Item | Item no. | Fire test report | Profile | Length L [mm] | Sales unit [pcs] |
|---|---|---|---|---|---|
| ALK 17-200 | 538738 | – | 17 / 1.0 | 200 | 10 |
| ALK 17-300 | 538739 | – | 17 / 1.0 | 300 | 10 |
| ALK 30-200 | 538740 | – | 30 / 1.0 | 200 | 10 |
| ALK 30-300 | 538741 | – | 30 / 1.0 | 300 | 10 |
| ALK 30-450 | 538742 | – | 30 / 1.0 | 450 | 10 |
| ALK 37-300 | 538743 | Yes | 37 / 1.2 | 300 | 10 |
| ALK 37-450 | 538744 | Yes | 37 / 1.2 | 450 | 10 |
| ALK 37-600 | 538745 | Yes | 37 / 1.2 | 600 | 5 |

For load information under fire exposure, see chapter Basic knowledge.

## Loads

| Item | Item no. | Max. recommended static load load case 1 $F_{rec}$ [kN] | Max. recommended static load load case 2 $F_{rec}$ [kN] | Max. recommended static load load case 3 $F_{rec}$ [kN] | Sales unit [pcs] |
|---|---|---|---|---|---|
| ALK 17-200 | 538738 | 0.49 | 0.24 | 0.49 | 10 |
| ALK 17-300 | 538739 | 0.92 | 0.12 | 0.31 | 10 |
| ALK 30-200 | 538740 | 1.18 | 0.59 | 1.18 | 10 |
| ALK 30-300 | 538741 | 0.79 | 0.39 | 0.79 | 10 |
| ALK 30-450 | 538742 | 0.53 | 0.22 | 0.53 | 10 |
| ALK 37-300 | 538743 | 1.27 | 0.93 | 1.27 | 10 |
| ALK 37-450 | 538744 | 0.86 | 0.41 | 0.86 | 10 |
| ALK 37-600 | 538745 | 0.63 | 0.24 | 0.63 | 5 |

### Load case 1

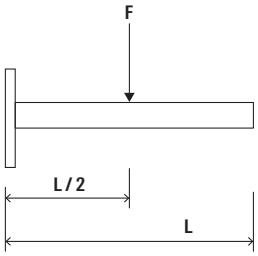


### Load case 2

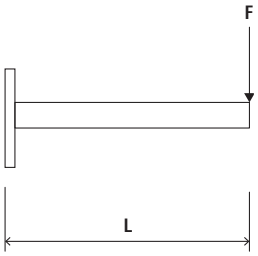


### Load case 3

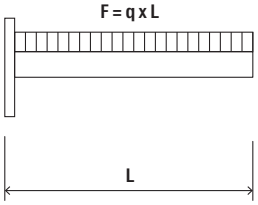

## ALK 17/1,0

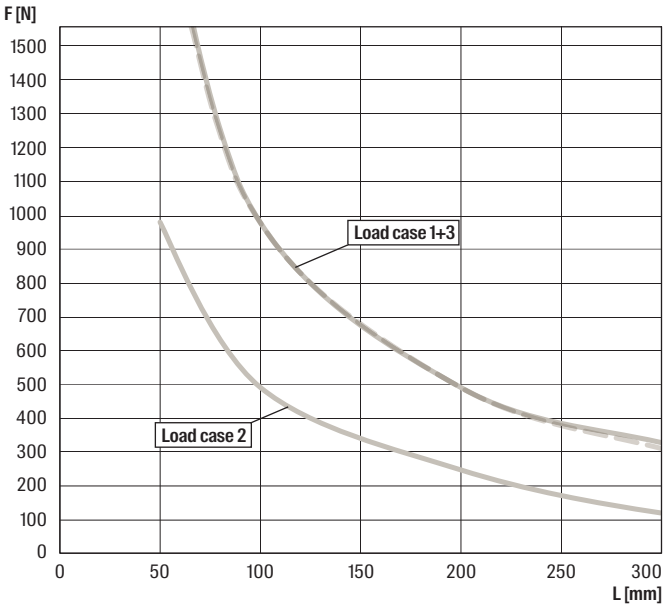


## ALK 30/1,0

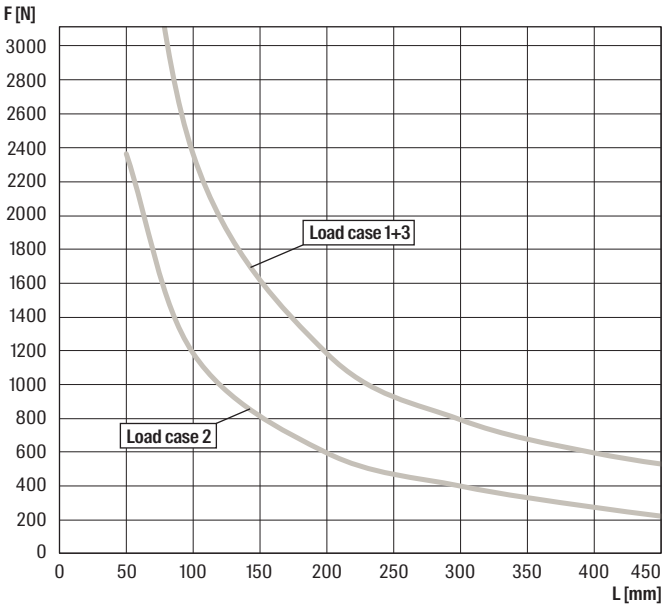


For the load curves, the permissible steel strain δadm. = 188 N/mm² (increased steel strain due to bending) and the maximum deflection under load L/150 are not exceeded. Fixings and screw fastenings must be calculated accordingly.

## FLS 37/1,2

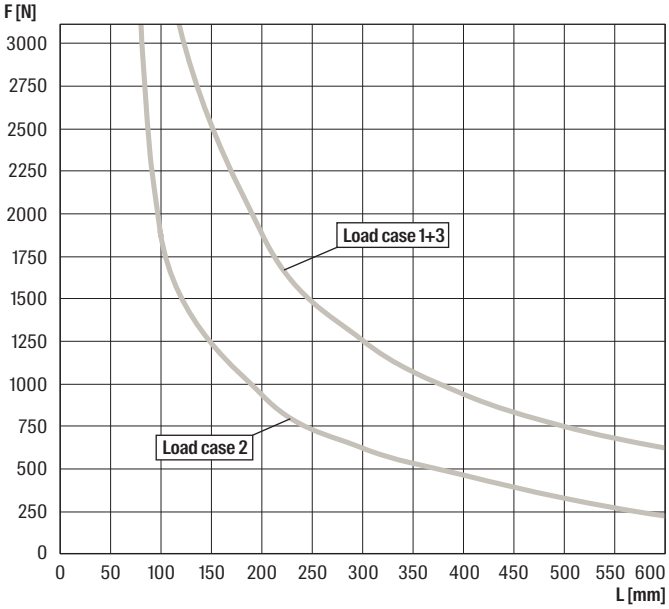


For the load curves, the permissible steel strain δadm. = 188 N/mm² (increased steel strain due to bending) and the maximum deflection under load L/150 are not exceeded. Fixings and screw fastenings must be calculated accordingly.

# Cover cap AK

The cover cap for form-flush protection, tailored to the FLS profile sizes





## Applications

- Closing for channel FLS and cantilever arms ALK.

## Advantages

- Suitable for channel FLS 17, FLS 30 and FLS 37 and cantilever arms ALK

## Properties

- Material: PP polypropylene, colour black

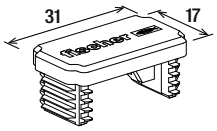


AK 17

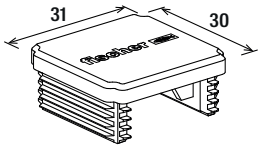


AK 30

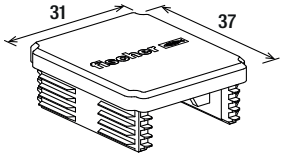


AK 37

## Technical data

| Item | Item no. | For profile | Material | Sales unit [pcs] |
|---|---|---|---|---|
| **AK 17** | **538746** | 17/1.0 | polypropylene | 100 |
| **AK 30** | **538747** | 30/1.0 | polypropylene | 100 |
| **AK 37** | **538748** | 37/1.2 | polypropylene | 50 |

# Angle brace WS 31-45°

Angle brace for stable constructions



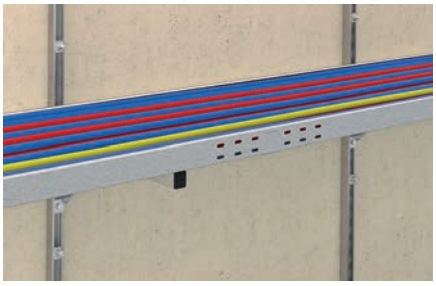

Cable tray on cantilever construction



Ventilating pipe fixing at the wall



## Applications

- Angle brace to construct self- supporting channel constructions with FLS channels or ALK cantilever arms.
- For use in dry interior areas.

## Advantages

- The stable angle brace element WS 31-45° lends the supporting structure a great stability and safety.
- The size of the angle brace element guarantees a secure connection with ALK cantilever arms and FLS channels by it's fitting accuracy.
- The standardised long slots in the angle brace enable an exact connection to ALK cantilever arms or FLS channels by using FSM Clix P and a screw.

## Properties

- Material: steel S235JR (material no. 1.0037) acc. to DIN EN 10025
- Zinc plating: electro zinc-plated

## Installation WS 31-45°

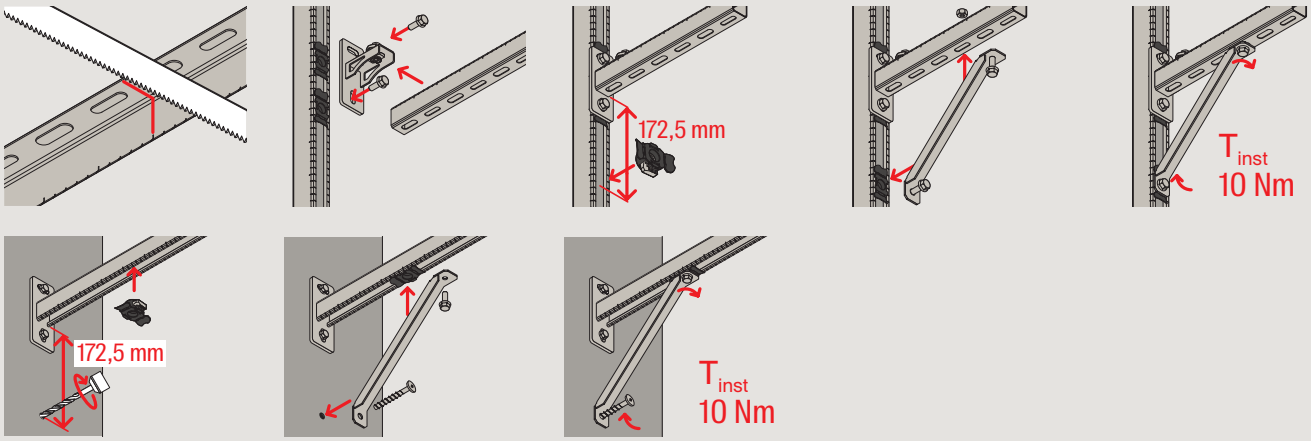

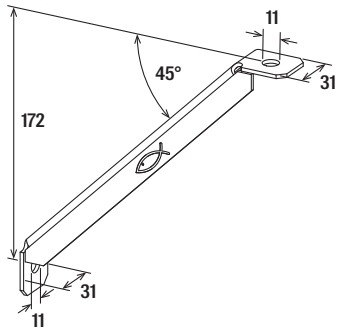


WS 31-45°

## Technical data

| Item | Item no. | Hole-Ø D [mm] | Sales unit [pcs] |
|---|---|---|---|
| WS 31-45° | 538749 | 11 | 10 |

## Loads

| Item | Item no. | Max. recommended static load load case 1a [kN] | Max. recommended static load load case 2a [kN] | Max. recommended static load load case 3a [kN] | Sales unit [pcs] |
|---|---|---|---|---|---|
| ALK 17-200 | 538738 | 1.03 | 1.03 | 1.03 | 10 |
| ALK 17-300 | 538739 | 1.52 | 0.45 | 1.52 | 10 |
| ALK 30-200 | 538740 | 2.52 | 1.40 | 2.52 | 10 |
| ALK 30-300 | 538741 | 1.78 | 0.89 | 1.78 | 10 |
| ALK 30-450 | 538742 | 1.16 | 0.47 | 1.16 | 10 |
| ALK 37-300 | 538743 | 1.78 | 0.89 | 1.78 | 10 |
| ALK 37-450 | 538744 | 1.16 | 0.59 | 1.16 | 10 |
| ALK 37-600 | 538745 | 0.89 | 0.45 | 0.89 | 5 |

Note: Loads are valid for fixing to wall with adequate carrying capacity. Fixing of the cantilever arm and the angle brace to the wall by anchor (e.g. FAZ II Plus, UltraCut FBS II 8).
Fixing of the angle brace to the cantilever profile by FSM Clix P 10, tightening torque 12 Nm. Fixing of the angle brace to the long slot of the cantilever profile by screw and nut M10, tightening torque 20 Nm.

### Load case 1

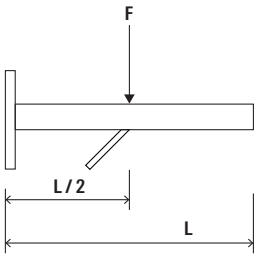


### Load case 2

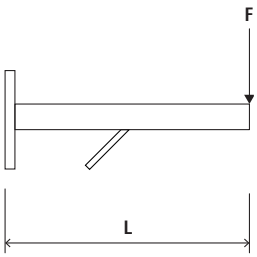


### Load case 3

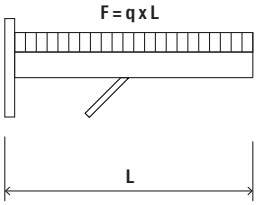

# Channel connector SV 31

Construction element - Channel connector SV 31





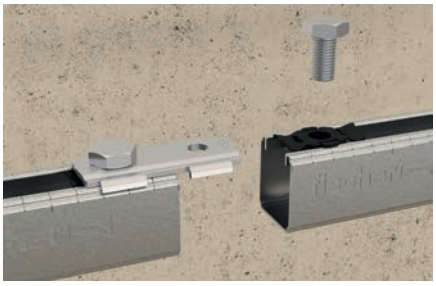

Channel extension with channel connector

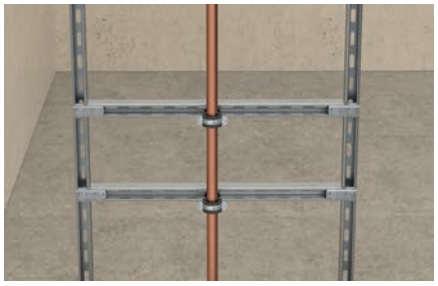

Vertical installation

## Applications

- With the channel connector SV 31 FLS channels can be connected in different directions.
- For use in dry interior areas.

## Advantages

- The special retaining brackets at the SV construction elements enable a form-locking installation longitudinal and transverse to the channel direction to adapt the channel connection effectively
- The standardised long slots of the channel connector enable an exact connection to ALK cantilever arms or FLS channels by using FSM Clix P and a screw

## Properties

- Material: steel S235JR+CR (material no. 1.0037) acc. to DIN EN 1652
- Zinc plating: electro zinc-plated

## Installation SV 31

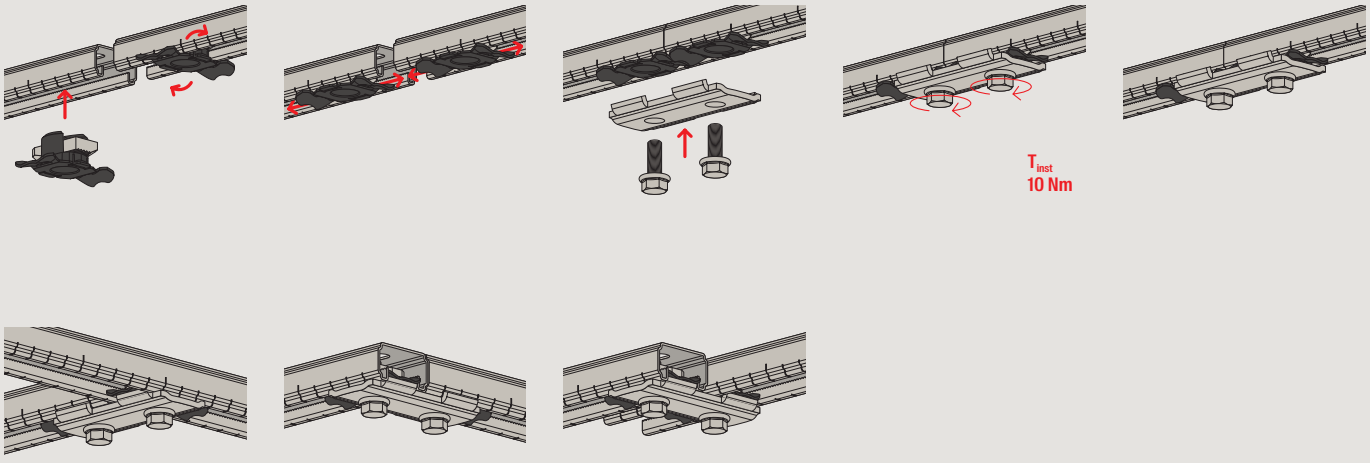

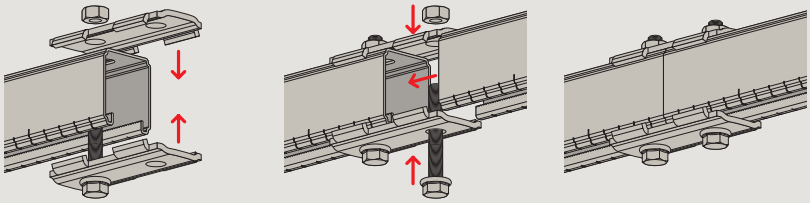



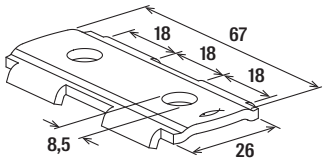


SV 31

## Technical data

| | Item no. | Hole-Ø<br>D<br>[mm] | Sales unit<br>[pcs] |
|---|---|---|---|
| **Item** | | | |
| **SV 31** | **538641** | 8.5 | 25 |

## Loads

| | Item no. | Max. recommended shear load<br>$V_{rec}$<br>[kN] | Tightening torque<br>$T_{inst}$<br>[Nm] | Sales unit<br>[pcs] |
|---|---|---|---|---|
| **Item** | | | | |
| **SV 31** | **538641** | 1.00 | 10 | 25 |

# Sliding channel nut FSM Clix P

Channel nut for quick and easy connection of FLS channels





Floor penetration

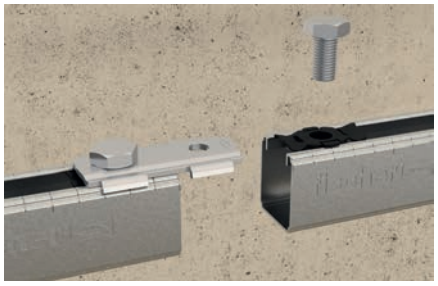

Channel extension with channel connector



## Applications

- FSM Clix P is suitable for interconnecting FLS channels by using connecting elements.
- For use in dry interior areas.

## Certificates

R 120

R 30 MLAR

## Advantages

- The special and disappearing thrust block of the sliding nut Clix P plastic holder enables a connection of connecting elements and channels without plastic interlayer to establish a safe longitudinal metallic connection.
- The especially developed spring leg on the FSM Clix P guarantees the necessary contact pressure of the connector to the channel to help for a secure adjustment during installation.
- The teeth on the sliding nut enable an exact and secure positioning in the FLS channel and ease the installation of connector elements.
- The unique stop element on the FSM Clix P connector guarantees the accurate 90°-turn of the connectors in the channel to ensure a save and precise installation.

## Properties

- Material channel nut: steel S420MC (material no. 1.0980) acc. to DIN EN 10149-2
- Material plastic cage: polypropylene PP, colour black
- Zinc plating: electro zinc-plated

## Installation FSM Clix P

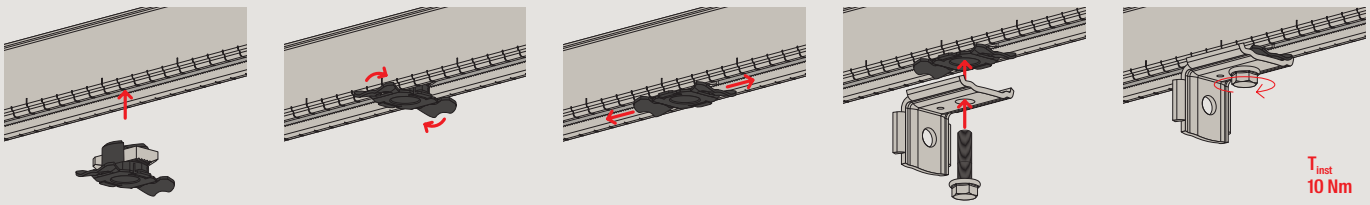

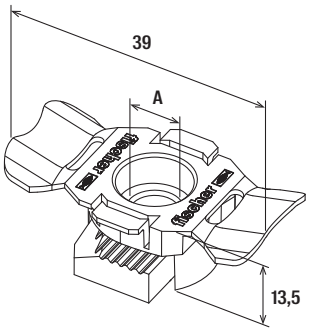


FSM Clix P

## Technical data

| Item | Item no. | Thread<br>A | Sales unit<br>[pcs] |
|---|---|---|---|
| FSM Clix P 6 | 538643 | M6 | 50 |
| FSM Clix P 8 | 538647 | M8 | 50 |
| FSM Clix P 10 | 538649 | M10 | 50 |

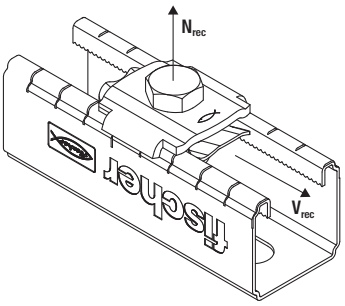


FSM Clix P

## Loads

| Item | Item no. | Max. recommended tension load for FLS 17/1.0 and FLS 30/1.0<br>$N_{rec}$<br>[kN] | Max. recommended tension load for FLS 37/1.2<br>$N_{rec}$<br>[kN] | Max. recommended shear load<br>$V_{rec}$<br>[kN] | Tightening torque<br>$T_{inst}$<br>[Nm] | Sales unit<br>[pcs] |
|---|---|---|---|---|---|---|
| FSM Clix P 6 | 538643 | 1.5 | 2.0 | 1.00 | 10 | 50 |
| FSM Clix P 8 | 538647 | 1.5 | 2.0 | 1.00 | 10 | 50 |
| FSM Clix P 10 | 538649 | 1.5 | 2.0 | 1.00 | 10 | 50 |

# Sliding channel nut FSM Clix M

Channel nut for quick and easy fixing in FLS channels







Pipe fixing at mounting channel

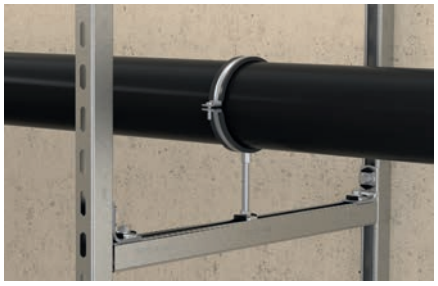

Pipe fixing on frame construction

## Applications

- FSM Clix M is suitable for connecting pipe clamps with a threaded rod to FLS channels.
- For use in dry interior areas.

## Certificates

R 120

R 30 MLAR

## Advantages

- The unique spring leg at the FSM Clix M guarantees the necessary contact pressure of the connector to the channel to help for a secure adjustment during installation.
- The teeth on the sliding nut enable an exact and secure positioning in the FLS channel and ease the installation of connector elements.
- The clix-connector element with 90°-turn for connecting enables an easy post-installation in set channels to save time and money.
- The especially developed stop element on the FSM Clix M connector guarantees the accurate 90°-turn of the connectors in the channel to ensure a safe and precise installation.

## Properties

- Material channel nut: steel S420MC (material no. 1.0980) acc. to DIN EN 10149-2
- Material cover plate: steel S235JR+CR (material no. 1.0037) acc. to DIN 1652
- Material plastic cage: polypropylene PP, colour black
- Zinc plating: electro zinc-plated

## Installation FSM Clix M

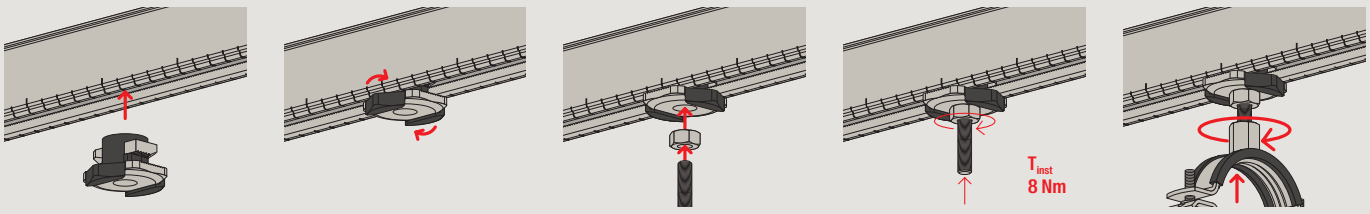

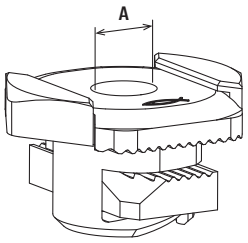


FSM Clix M

3

## Technical data

| Item | Item no. | Thread<br>A | Width across nut<br>SW<br>[mm] | Sales unit<br>[pcs] |
|---|---|---|---|---|
| **FSM Clix M 6** | **538650** | M6 | 10 | 50 |
| **FSM Clix M 8** | **538651** | M8 | 13 | 50 |
| **FSM Clix M 10** | **538652** | M10 | 17 | 50 |

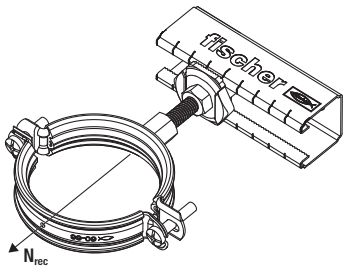


FSM Clix M

## Loads

| Item | Item no. | Max. recommended tension load for FLS 17/1.0 and FLS 30/1.0<br>$N_{rec}$<br>[kN] | Max. recommended tension load for FLS 37/1.2<br>$N_{rec}$<br>[kN] | Tightening torque<br>$T_{inst}$<br>[Nm] | Sales unit<br>[pcs] |
|---|---|---|---|---|---|
| **FSM Clix M 6** | **538650** | 1.5 | 2.0 | 8 | 50 |
| **FSM Clix M 8** | **538651** | 1.5 | 2.0 | 8 | 50 |
| **FSM Clix M 10** | **538652** | 1.5 | 2.0 | 8 | 50 |

# T-head bolt FHS Clix

Hammer-head bolt for quick and easy fixing in FLS channels



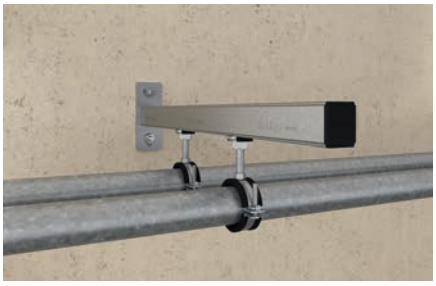

Light pipe fixing



Pipe fixing at mounting channel



## Applications

- FHS Clix is suitable for connecting pipe clamps with the channel.
- For use in dry interior areas.

## Certificates

R 120

R 30 MLAR

## Advantages

- The special spring leg at the FHS Clix guarantees the necessary contact pressure of the connector to the channel to help for a secure adjustment during installation.
- The teeth on the sliding nut enable an exact and secure positioning in the FLS channel and ease the installation of connector elements.
- The clix-connector element with 90°-turn for connecting enables an easy post-installation in set channels to save time and money.
- The especially developed stop element on the FHS Clix connector guarantees the accurate 90°-turn of the connectors in the channel to ensure a safe and precise installation.

## Properties

- Material channel nut: steel S420MC (material no. 1.0980) acc. to DIN EN 10149-2
- Material cover plate: steel S235JR+CR (material no. 1.0037) acc. to DIN 1652
- Material threaded rod: steel acc. to DIN 976-2, min. 4.6 (DIN EN ISO 898-1)
- Material hexagonal nut: steel acc. to DIN 934-4, min. 4.8 (DIN EN ISO 898-2 table 4 stability)
- Material plastic cage: polypropylene PP, colour black
- Zinc plating: electro zinc-plated

## Installation FHS Clix

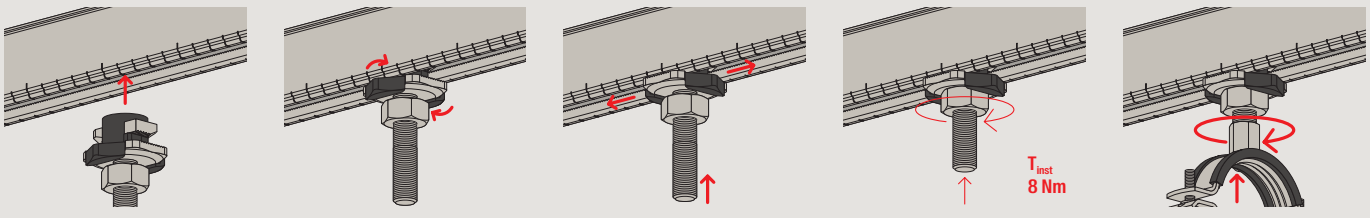

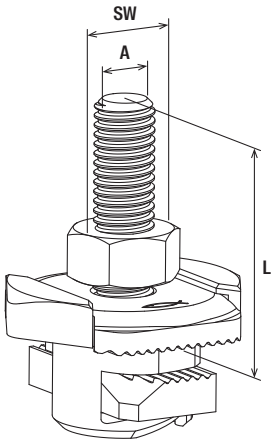


FHS Clix

## Technical data

| Item | Item no. | Thread<br>A | Length<br>L<br>[mm] | Width across nut<br>SW<br>[mm] | Sales unit<br>[pcs] |
|---|---|---|---|---|---|
| FHS Clix 8 x 30 | 538653 | M8 | 30 | 13 | 100 |
| FHS Clix 8 x 40 | 538654 | M8 | 40 | 13 | 100 |
| FHS Clix 8 x 60 | 538655 | M8 | 60 | 13 | 100 |
| FHS Clix 8 x 80 | 538656 | M8 | 80 | 13 | 50 |
| FHS Clix 8 x 100 | 538657 | M8 | 100 | 13 | 50 |
| FHS Clix 8 x 140 | 545834 | M8 | 140 | 13 | 50 |
| FHS Clix 8 x 190 | 545835 | M8 | 190 | 13 | 50 |
| FHS Clix 10 x 30 | 538658 | M10 | 30 | 17 | 100 |
| FHS Clix 10 x 40 | 538659 | M10 | 40 | 17 | 100 |
| FHS Clix 10 x 60 | 538660 | M10 | 60 | 17 | 50 |
| FHS Clix 10 x 80 | 545836 | M10 | 80 | 17 | 50 |
| FHS Clix 10 x 100 | 538661 | M10 | 100 | 17 | 50 |

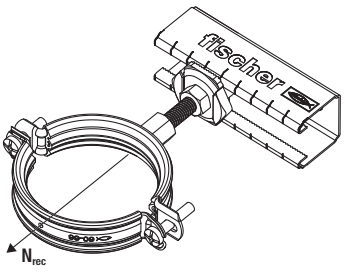


FHS Clix

## Loads

| Item | Item no. | Max. recommended tension load for FLS 17/1.0 and FLS 30/1.0<br>$N_{rec}$<br>[kN] | Max. recommended tension load for FLS 37/1.2<br>$N_{rec}$<br>[kN] | Sales unit<br>[pcs] |
|---|---|---|---|---|
| FHS Clix 8 x 30 | 538653 | 1.5 | 2.0 | 100 |
| FHS Clix 8 x 40 | 538654 | 1.5 | 2.0 | 100 |
| FHS Clix 8 x 60 | 538655 | 1.5 | 2.0 | 100 |
| FHS Clix 8 x 80 | 538656 | 1.5 | 2.0 | 50 |
| FHS Clix 8 x 100 | 538657 | 1.5 | 2.0 | 50 |
| FHS Clix 8 x 140 | 545834 | 1.5 | 2.0 | 50 |
| FHS Clix 8 x 190 | 545835 | 1.5 | 2.0 | 50 |
| FHS Clix 10 x 30 | 538658 | 1.5 | 2.0 | 100 |
| FHS Clix 10 x 40 | 538659 | 1.5 | 2.0 | 100 |
| FHS Clix 10 x 60 | 538660 | 1.5 | 2.0 | 50 |
| FHS Clix 10 x 80 | 545836 | 1.5 | 2.0 | 50 |

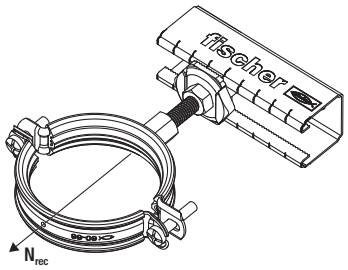


FHS Clix



## Loads

| | Item no. | Max. recommended tension load for FLS 17/1.0 and FLS 30/1.0 $N_{rec}$ [kN] | Max. recommended tension load for FLS 37/1.2 $N_{rec}$ [kN] | Sales unit [pcs] |
|---|---|---|---|---|
| **Item** | | | | |
| **FHS Clix 10 x 100** | **538661** | 1.5 | 2.0 | 50 |

# Saddle flange SF Clix 31

The pre-assembled saddle flange SF Clix 31







Channel installation at the wall



Cantilever construction with channel

## Applications

- Element for the stable construction of connections between channels and building structures.
- For use in dry interior areas.

## Advantages

- Pre-assembled accessories like SF Clix bring the number of articles for a connection down and guarantee a time-saving installation.
- The pre-assembled connector of the SF Clix secures the installation position due to the unique thrust block and guarantees a safe and fast installation.
- The special spring leg at pre-assembled connector guarantees the necessary contact pressure of the connector to the channel to help for a secure adjustment during installation.
- The perfect-fit saddle of the SF allows an simple installation by inserting the channel.
- The saddle flange‘s stable design offers a secure hold for a load-bearing construction.

## Properties

- Material saddle: steel E295 (material no. 1.0050) acc. to DIN EN 10025-2
- Material channel nut: steel S420MC (material no. 1.0980) acc. to DIN EN 10149-2
- Material cover plate: steel S235JR+CR (material no. 1.0037) acc. to DIN 1652
- Material hexagonal screw: steel min. 4.6 (DIN EN ISO 898-1)
- Material plastic cage: polypropylene PP, colour black
- Zinc plating: electro zinc-plated

## Installation SF Clix 31

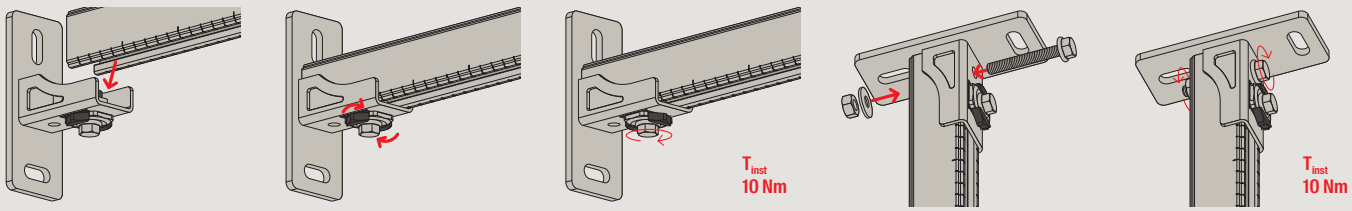

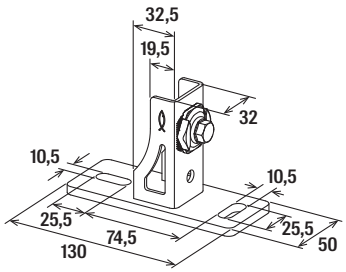


SF Clix 31



## Technical data

| Item | Item no. | Thread<br>A | Width across nut<br>SW<br>[mm] | Sales unit<br>[pcs] |
|---|---|---|---|---|
| **SF Clix 31** | **538665** | M8 | 13 | 10 |

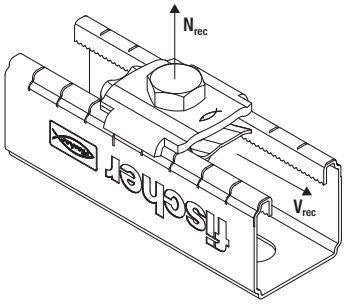


SF Clix 31

## Loads

| Item | Item no. | Max. recommended tension load for FLS 17/1.0 and FLS 30/1.0<br>$N_{rec}$<br>[kN] | Max. recommended tension load for FLS 37/1.2<br>$N_{rec}$<br>[kN] | Max. recommended shear load<br>$V_{rec}$<br>[kN] | Sales unit<br>[pcs] |
|---|---|---|---|---|---|
| **SF Clix 31** | **538665** | 1.5 | 2.0 | 1.00 | 10 |

# Angle bracket MW Clix 90°

The pre-assembled angle bracket MW Clix 90°







Cantilever construction with channel



Pipe fixing on frame construction

## Applications

- Element for the stable construction of angle connections with FLS channels.
- For use in dry interior areas.

## Advantages

- Pre-assembled accessories like SF Clix bring the number of articles for a connection down and guarantee a time-saving installation.
- The pre-assembled connector of the MW Clix secures the installation position due to the unique thrust block and guarantees a safe and fast installation.
- The especially developed spring leg at the pre-assembled connector guarantees the necessary contact pressure of the connector to the channel to help for a secure adjustment during installation.
- The form-locking and accurately fitting angle bracket of the MW clix allows a simple installation of the FLS channel and saves valuable installation time.

## Properties

- Material angle bracket: steel S235JR+CR (material no. 1.0037) acc. to DIN 1652
- Material channel nut: steel S420MC (material no. 1.0980) acc. to DIN EN 10149-2
- Material cover plate: steel S235JR+CR (material no. 1.0037) acc. to DIN 1652
- Material hexagonal screw: steel min. 4.6 (DIN EN ISO 898-1)
- Material plastic cage: polypropylene PP, colour black
- Zinc plating: electro zinc-plated

## Installation MW Clix 90°

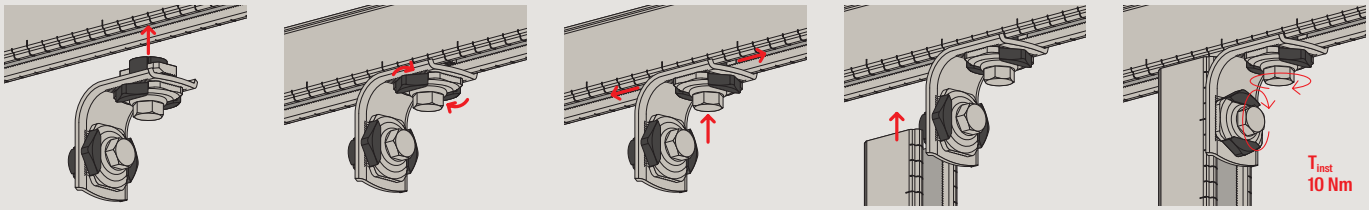

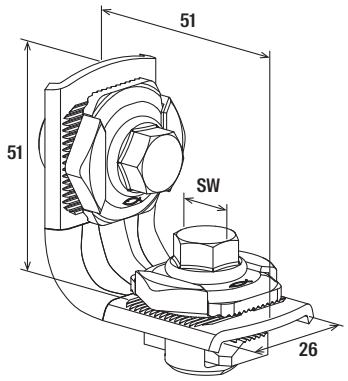


MW Clix 90°

## Technical data

| | Item no. | Thread<br>A | Width across nut<br>SW<br>[mm] | Sales unit<br>[pcs] |
|---|---|---|---|---|
| **Item** | | | | |
| **MW Clix 90°** | **538666** | M8 | 13 | 10 |

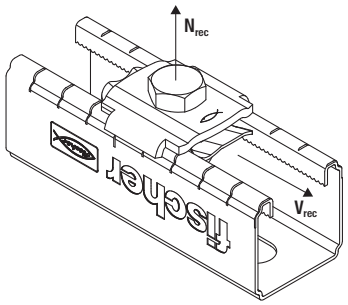


MW Clix 90°

## Loads

| | Item no. | Max. recommended tension load for FLS 17/1.0 and FLS 30/1.0<br>$N_{rec}$<br>[kN] | Max. recommended tension load for FLS 37/1.2<br>$N_{rec}$<br>[kN] | Max. recommended shear load<br>$V_{rec}$<br>[kN] | Installation torque<br>$T_{inst}$<br>[Nm] | Sales unit<br>[pcs] |
|---|---|---|---|---|---|---|
| **Item** | | | | | | |
| **MW Clix 90°** | **538666** | 1.5 | 2.0 | 1.00 | 10 | 10 |

# Angle bracket MW and MWU

Construction element – Angle bracket MW 90° and MWU 90°







Floor penetration



Pipe fixing in a corridor

## Applications

- Connecting elements for the arrangement of simple channel constructions with the sliding channel nut FSM Clix P.
- For use in dry interior areas.

## Advantages

- The individual developed retaining brackets at the MW 90° angle bracket enable a form-locking installation longitudinal and transverse to the channel direction to adapt the channel connection effectively.
- The long slot on flat wing of the MWU 90° angle bracket enables a direct connection to the substrate for space-saving fixation.
- The standardised holes in the angle brackets enable an exact connection to the FLS channels by using FSM Clix P and a screw.

## Properties

- Material: steel S235JR+CR (material no. 1.0037) acc. to DIN EN 1652
- Zinc plating: electro zinc-plated

## Installation MW

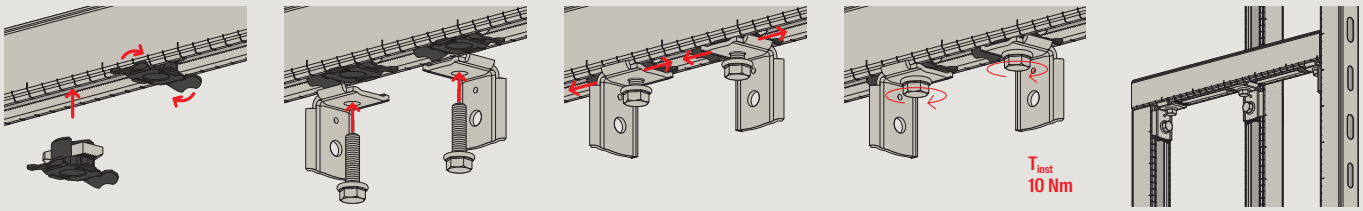


## Installation MWU

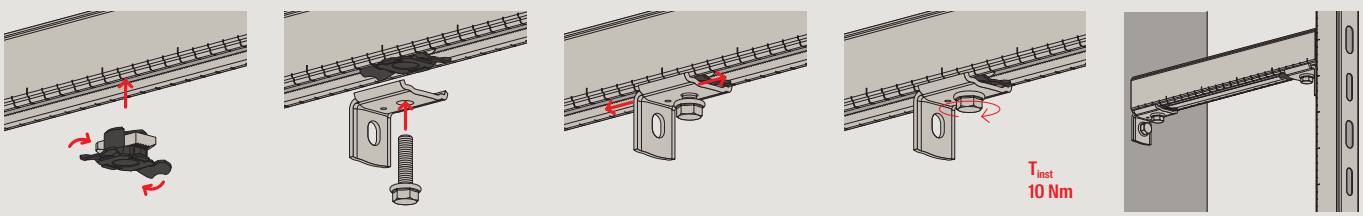

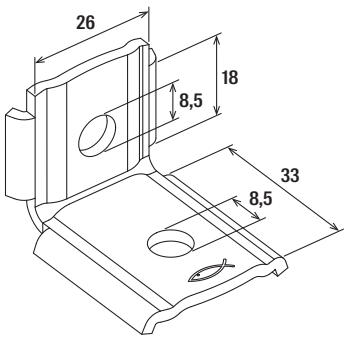


MW 90°

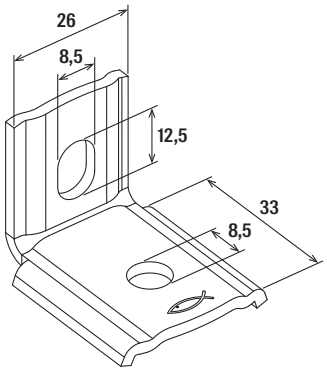


MWU 90°

## Technical data

| Item | Item no. | | Sales unit [pcs] |
|---|---|---|---|
| MW 90° | 538668 | | 50 |
| MWU 90° | 538667 | | 25 |

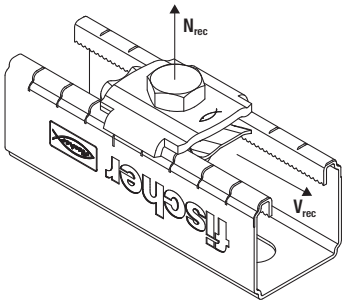


## Loads

| Item | Item no. | Max. recommended tension load for FLS 17/1.0 and FLS 30/1.0 $N_{rec}$ [kN] | Max. recommended tension load for FLS 37/1.2 $N_{rec}$ [kN] | Max. recommended shear load $V_{rec}$ [kN] | Installation torque $T_{inst}$ [Nm] | Sales unit [pcs] |
|---|---|---|---|---|---|---|
| MW 90° | 538668 | 1.5 | 2.0 | 1.00 | 10 | 50 |
| MWU 90° | 538667 | 1.5 | 2.0 | 1.00 | 10 | 25 |

# Channel washer HK 31

Connector - Channel washer HK 31



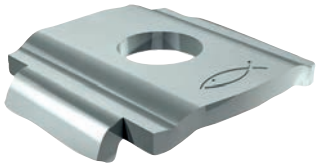



Pipe fixing at mounting channel



Horizontal pipe fixing

## Applications

- The Channel washer HK 31 is used for stable connections and to strengthen the FLS profile for a fixing to the substrate.
- For use in dry interior areas.

## Certificates

R 120

R 30 MLAR

## Advantages

- The special retaining brackets at the SV connecting elements enable a form-locking installation longitudinal and transverse to the channel direction to adapt the channel connection effectively.
- The standardised slots of the Channel washer enable an exact push-through connection of FLS mounting channels easy and fast.

## Properties

- Material: steel S235JR+CR (material no. 1.0037) acc. to DIN EN 1652
- Zinc plating: electro zinc-plated

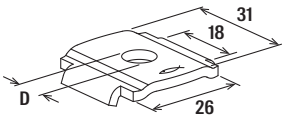


HK 31

## Technical data

| Item | Item no. | Hole-Ø D [mm] | Sales unit [pcs] |
|---|---|---|---|
| HK 31 8,5 | 538663 | 8.5 | 50 |
| HK 31 10.5 | 538664 | 10.5 | 50 |

# Beam clamp TKR 31

Clamping bracket for the fixing of channels to steel girders





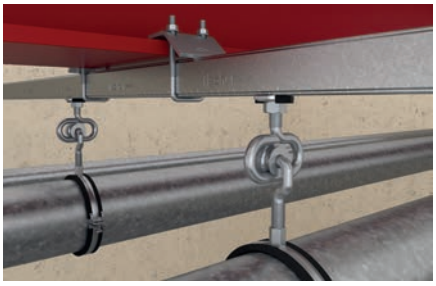

Channel fixing to steel beam

## Applications

- Fixing of FLS channels to steel girders, required are two beam clamps per fixing.
- For use in dry interior areas.

## Advantages

- The design of the bean clamp allows for fixing without drilling or welding.
- The various lengths of the bean clamp sides allows for fixing on all standard steel beams.
- The shape of the bean clamp guarantees the simple adjustment of the channel connection.

## Properties

- Material U-bolt pipe hanger: steel S235JR (material no. 1.0037) acc. to DIN EN 10025-2
- Material plate: steel E295 (material no. 1.0050) acc. to DIN EN 10025-2
- Material hexagon nut: steel resistance class 8
- Zinc plating: electro zinc-plated

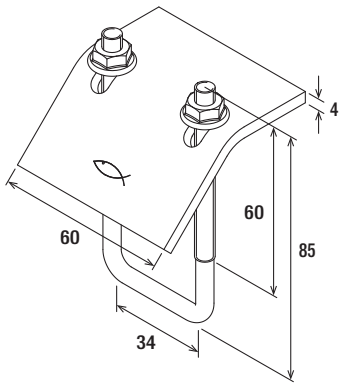


TKR 31

## Technical data

| Item | Item no. | Thread A | Width across nut SW [mm] | Sales unit [pcs] |
|---|---|---|---|---|
| TKR 31 | 538751 | M6 | 10 | 25 |

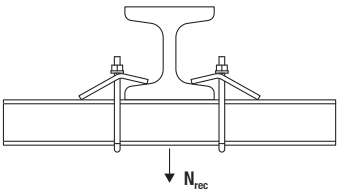


TKR

## Loads



| | Item no. | Max. recom. static load (centr. tension) $N_{rec}$ [kN] | Tightening torque $T_{inst}$ [Nm] | Sales unit [pcs] |
|---|---|---|---|---|
| **Item** | | | | |
| **TKR 31** | **538751** | 2.80 | 5 | 25 |

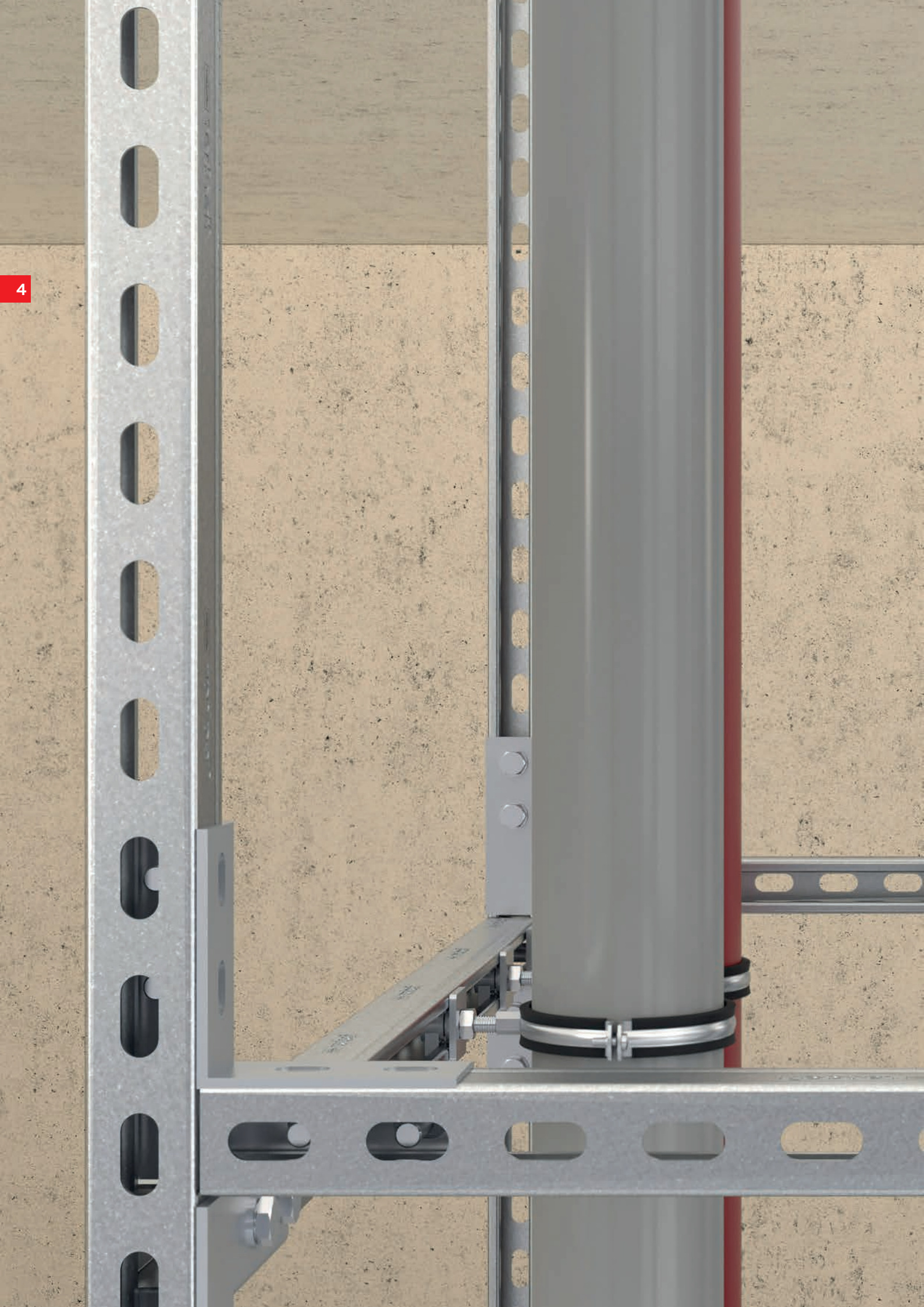

# 4

# Channel system Universal FUS




| | | |
|---|---|---|
| Channel FUS | 116 |  |
| Channel connector FUF OC and PFUF OC | 122 |  |
| Socket wrench FSK | 123 |  |
| Channel connector FDCC | 124 |  |
| Cantilever arm FCA | 126 |  |
| Large cantilever arm FCAM | 131 |  |
| Cover cap FEC | 133 |  |
| Push-through connector PFCN | 134 |  |
| Saddle flange PSF | 136 |  |
| Universal bracket PUWS | 138 |  |
| Angle bracket PWK | 140 |  |
| Angle bracket fire-tested PUWF | 141 |  |
| Variable bracket PVB | 145 |  |
| Bracing elements PSAE | 146 |  |
| Bracket PFFF | 148 |  |
| Bracket PFAF | 149 |  |
| Bracket PFUF | 151 |  |
| Brackets PFUF D | 152 |  |
| Channel nut FCN Clix P | 154 |  |
| Channel nut FCN Clix M | 156 |  |
| Channel nut FCN | 158 |  |
| T-head bolt FCN Clix S | 160 |  |
| T-head bolt FCSN | 162 |  |
| Channel washer HK 41 | 164 | 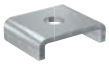 |
| Saddle flange SF | 165 |  |
| Mounting bracket UWS | 167 |  |
| Angle bracket WK | 168 |  |
| Bracket FFF | 170 |  |
| Bracket FAF | 172 |  |
| Flange FZF, FUF | 174 |  |
| Flange FUF | 176 |  |
| Variable bracket VB | 178 |  |
| Bracing bracket FYJB | 179 |  |
| Universal hinge FUH | 181 |  |
| Threaded rod bracket FSB 45° | 183 |  |
| Beam clamp TKR | 184 |  |
| Beam clamp FHBC hdg | 185 |  |

# Channel FUS

The universal and complete mounting channel system for a wide range of applications







3D-frame constructions



Solid frame construction

## Applications

- Secure horizontal and vertical installations.
- Fast and efficient fixing of pipelines and supporting structures.
- For use in dry interior areas.

## Certificates

ETA-21/0140

## Advantages

- The fire inspection report in line with MLAR/EN13501 guarantees independently tested functional safety.
- The basic channel geometry allows the usage of the complete extensive range of accessories.
- The stamped serration in the channel gives the sliding nuts a secure hold for high shear loads, e.g. for vertical installation.
- Different channel wall thicknesses allow economical choices for installation.
- The scale on the mounting channels simplifies the cutting and positioning of the fixtures during the installation.

## Properties

- Material: pre-galvanised steel S250GD+Z275 (material no. 1.0242) acc. to DIN EN 10346

**See also:**

Product family Channel nut FCN Clix P Page 154



**See also:**

Product family Rubber inlay EMS Page 260



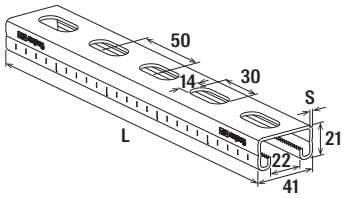


FUS 21

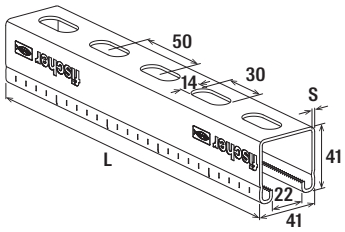


FUS 41

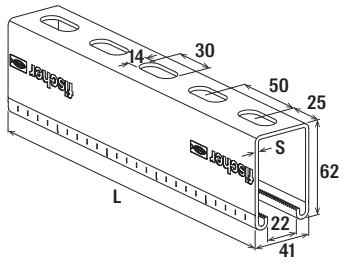


FUS 62

## Technical data

| Item | Item no. | Approval ETA | Fire test report | Length L [mm] | Thickness S [mm] | Sales unit [pcs] |
|---|---|---|---|---|---|---|
| **FUS 21/1,5 - 2 m** | **545117** | ● | – | 2,000 | 1.5 | 1 |
| **FUS 21/1,5 - 3 m** | **545118** | ● | – | 3,000 | 1.5 | 1 |
| **FUS 21/1,5 - 6 m** | **545119**[1)] | ● | – | 6,000 | 1.5 | 1 |
| **FUS 21/2,0 - 2 m** | **040391** | ● | – | 2,000 | 2.0 | 1 |
| **FUS 21/2,0 - 3 m** | **097660** | ● | – | 3,000 | 2.0 | 1 |
| **FUS 21/2,0 - 6 m** | **097661** | ● | – | 6,000 | 2.0 | 1 |
| **FUS 21/2,5 - 2 m** | **092867** | ● | – | 2,000 | 2.5 | 1 |
| **FUS 21/2,5 - 3 m** | **077349** | ● | – | 3,000 | 2.5 | 1 |
| **FUS 21/2,5 - 6 m** | **077541** | ● | – | 6,000 | 2.5 | 1 |
| **FUS 41/1,5 - 2 m** | **545120** | ● | – | 2,000 | 1.5 | 1 |
| **FUS 41/1,5 - 3 m** | **545126** | ● | – | 3,000 | 1.5 | 1 |
| **FUS 41/1,5 - 6 m** | **545127** | ● | – | 6,000 | 1.5 | 1 |
| **FUS 41/2,0 - 2 m** | **040390** | ● | – | 2,000 | 2.0 | 1 |
| **FUS 41/2,0 - 3 m** | **097658** | ● | – | 3,000 | 2.0 | 1 |
| **FUS 41/2,0 - 6 m** | **097659** | ● | – | 6,000 | 2.0 | 1 |
| **FUS 41/2,5 - 2 m** | **092295** | ● | Yes | 2,000 | 2.5 | 1 |
| **FUS 41/2,5 - 3 m** | **077347** | ● | Yes | 3,000 | 2.5 | 1 |
| **FUS 41/2,5 - 6 m** | **077537** | ● | Yes | 6,000 | 2.5 | 1 |
| **FUS 62/2,5 - 6 m** | **504457** | ● | Yes | 6,000 | 2.5 | 1 |

[1)] Delivery time on request.

For load information under fire exposure, see chapter Basic knowledge.

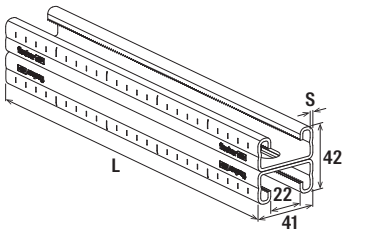


FUS 21D

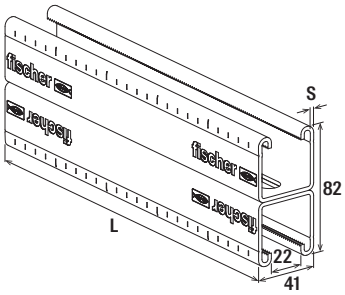


FUS 41D

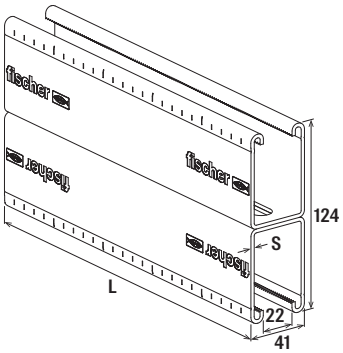


FUS 62D



## Technical data

| Item | Item no. | Approval ETA | Length L [mm] | Thickness S [mm] | Sales unit [pcs] |
|---|---|---|---|---|---|
| FUS 21D/2,0 - 3 m | 504458 | ● | 3,000 | 2.0 | 1 |
| FUS 21D/2,0 - 6 m | 535531 | ● | 6,000 | 2.0 | 1 |
| FUS 41D/2,5 - 6 m | 504459 | ● | 6,000 | 2.5 | 1 |
| FUS 62D/2,5 - 6 m | 504460 | ● | 6,000 | 2.5 | 1 |

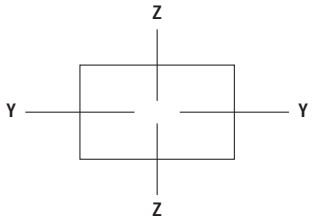


## Loads

| Item | Item no. | Approval ETA | Profile weight [kg/m] | Channel cross section [cm²] | Moment of inertia $I_y$ [cm⁴] | Moment of inertia $I_z$ [cm⁴] | Section modulus $W_y$ [cm³] | Section modulus $W_z$ [cm³] | Max. recommended static load for 1m length $F_{rec}$ [kN] | Max. recommended static load for 2m length $F_{rec}$ [kN] | Max. recommended static load for 3m length $F_{rec}$ [kN] | Sales unit [pcs] |
|---|---|---|---|---|---|---|---|---|---|---|---|---|
| FUS 21/1,5 - 2 m | 545117 | ● | 1.20 | 1.35 | 0.80 | 3.69 | 0.75 | 1.80 | 0.41 | 0.10 | – | 1 |
| FUS 21/1,5 - 3 m | 545118 | ● | 1.20 | 1.35 | 0.80 | 3.69 | 0.75 | 1.80 | 0.41 | 0.10 | – | 1 |
| FUS 21/1,5 - 6 m | 545119[1)] | ● | 1.20 | 1.35 | 0.80 | 3.69 | 0.75 | 1.80 | 0.41 | 0.10 | – | 1 |
| FUS 21/2,0 - 2 m | 040391 | ● | 1.44 | 1.72 | 0.97 | 4.66 | 0.89 | 2.27 | 0.49 | 0.12 | 0.05 | 1 |
| FUS 21/2,0 - 3 m | 097660 | ● | 1.44 | 1.72 | 0.97 | 4.66 | 0.89 | 2.27 | 0.49 | 0.12 | 0.05 | 1 |
| FUS 21/2,0 - 6 m | 097661 | ● | 1.44 | 1.72 | 0.97 | 4.66 | 0.89 | 2.27 | 0.49 | 0.12 | 0.05 | 1 |
| FUS 21/2,5 - 2 m | 092867 | ● | 1.67 | 1.99 | 1.03 | 5.28 | 0.93 | 2.58 | 0.52 | 0.13 | – | 1 |
| FUS 21/2,5 - 3 m | 077349 | ● | 1.67 | 1.99 | 1.03 | 5.28 | 0.93 | 2.58 | 0.52 | 0.13 | 0.06 | 1 |
| FUS 21/2,5 - 6 m | 077541 | ● | 1.67 | 1.99 | 1.03 | 5.28 | 0.93 | 2.58 | 0.52 | 0.13 | 0.06 | 1 |
| FUS 41/1,5 - 2 m | 545120 | ● | 1.80 | 1.95 | 4.26 | 6.03 | 2.07 | 2.94 | 1.56 | 0.54 | 0.24 | 1 |
| FUS 41/1,5 - 3 m | 545126 | ● | 1.80 | 1.95 | 4.26 | 6.03 | 2.07 | 2.94 | 1.56 | 0.54 | 0.24 | 1 |
| FUS 41/1,5 - 6 m | 545127 | ● | 1.80 | 1.95 | 4.26 | 6.03 | 2.07 | 2.94 | 1.56 | 0.54 | 0.24 | 1 |
| FUS 41/2,0 - 2 m | 040390 | ● | 2.06 | 2.52 | 5.33 | 7.69 | 2.58 | 3.75 | 1.94 | 0.67 | 0.30 | 1 |
| FUS 41/2,0 - 3 m | 097658 | ● | 2.06 | 2.52 | 5.33 | 7.69 | 2.58 | 3.75 | 1.94 | 0.67 | 0.30 | 1 |
| FUS 41/2,0 - 6 m | 097659 | ● | 2.06 | 2.52 | 5.33 | 7.69 | 2.58 | 3.75 | 1.94 | 0.67 | 0.30 | 1 |
| FUS 41/2,5 - 2 m | 092295 | ● | 2.45 | 3.00 | 6.00 | 8.99 | 2.85 | 4.38 | 2.14 | 0.76 | – | 1 |
| FUS 41/2,5 - 3 m | 077347 | ● | 2.45 | 3.00 | 6.00 | 8.99 | 2.85 | 4.38 | 2.14 | 0.76 | 0.34 | 1 |
| FUS 41/2,5 - 6 m | 077537 | ● | 2.45 | 3.00 | 6.00 | 8.99 | 2.85 | 4.38 | 2.14 | 0.76 | 0.34 | 1 |

[1)] Delivery time on request.

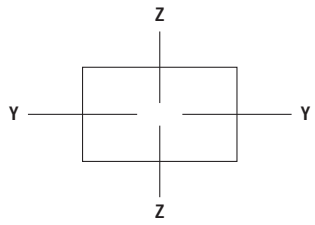




## Loads

| Item | Item no. | Approval ETA | Profile weight [kg/m] | Channel cross section [cm²] | Moment of inertia $I_y$ [cm⁴] | Moment of inertia $I_z$ [cm⁴] | Section modulus $W_y$ [cm³] | Section modulus $W_z$ [cm³] | Max. recommended static load for 1m length $F_{rec}$ [kN] | Max. recommended static load for 2m length $F_{rec}$ [kN] | Max. recommended static load for 3m length $F_{rec}$ [kN] | Sales unit [pcs] |
|---|---|---|---|---|---|---|---|---|---|---|---|---|
| FUS 62/2,5 - 6 m | 504457 | ● | 3.27 | 4.05 | 17.70 | 12.90 | 5.62 | 6.29 | 4.22 | 2.10 | 0.99 | 1 |
| FUS 21D/2,0 - 3 m | 504458 | ● | 2.87 | 3.44 | 5.49 | 9.31 | 2.61 | 4.54 | 1.96 | 0.69 | 0.31 | 1 |
| FUS 21D/2,0 - 6 m | 535531 | ● | 2.87 | 3.44 | 5.49 | 9.31 | 2.61 | 4.54 | 1.96 | 0.69 | 0.31 | 1 |
| FUS 41D/2,5 - 6 m | 504459 | ● | 4.89 | 6.00 | 35.01 | 17.90 | 8.76 | 8.78 | 6.58 | 3.28 | 1.96 | 1 |
| FUS 62D/2,5 - 6 m | 504460 | ● | 6.55 | 8.09 | 111.00 | 25.80 | 17.90 | 12.58 | 13.45 | 6.72 | 4.47 | 1 |

[1] Delivery time on request.

### Load case 1

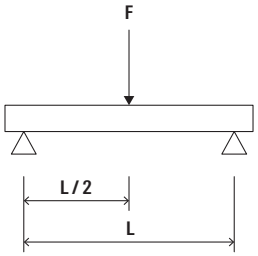


### Load case 2

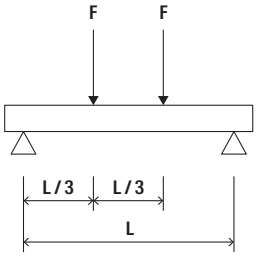


### Load case 3

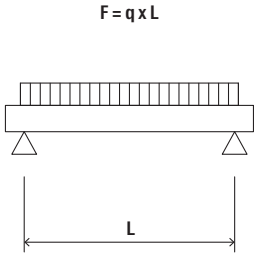


### FUS 21/1,5

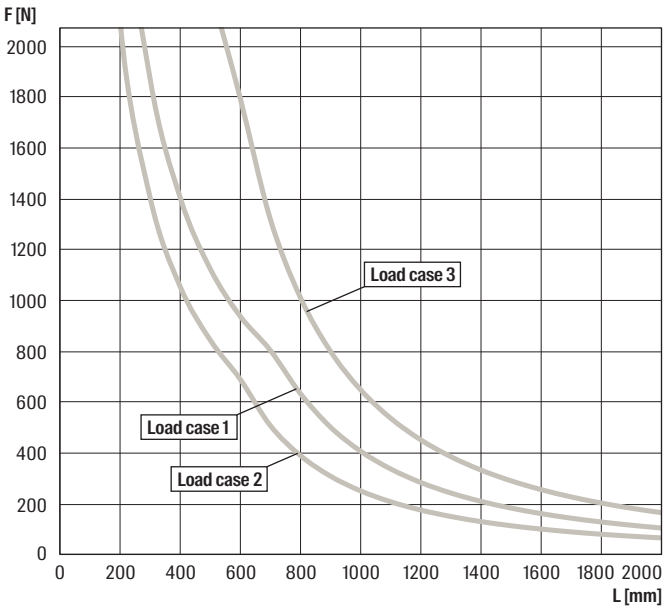


### FUS 21/2,0

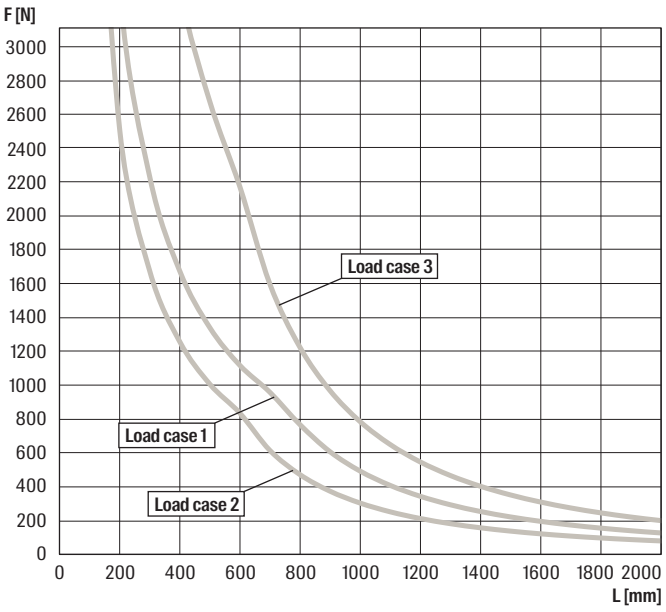


For the load curves, the permissible steel strain $\delta_{adm.}$ = 188 N/mm and the maximum deflection under load L/200 are not exceeded. Fixings and screw fastenings must be calculated accordingly. The increased yield strength is calcuated according DIN EN 1993-1-3:2010-12, sec. 3.2.2.

## FUS 21/2,5

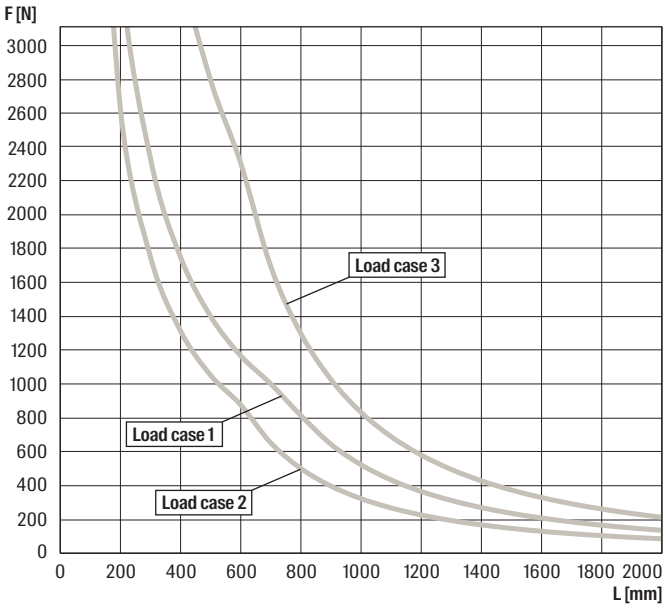


## FUS 41/1,5

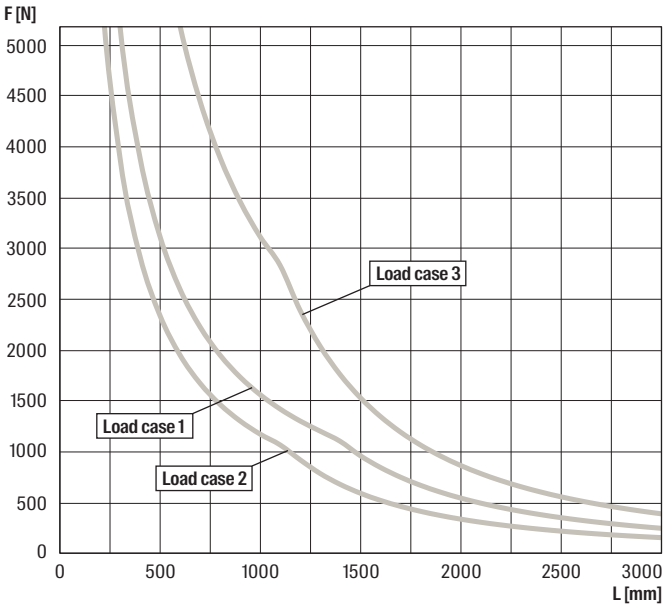


For the load curves, the permissible steel strain $\delta_{adm.}$ = 188 N/mm and the maximum deflection under load L/200 are not exceeded. Fixings and screw fastenings must be calculated accordingly. The increased yield strength is calcuated according DIN EN 1993-1-3:2010-12, sec. 3.2.2.

## FUS 41/2,0

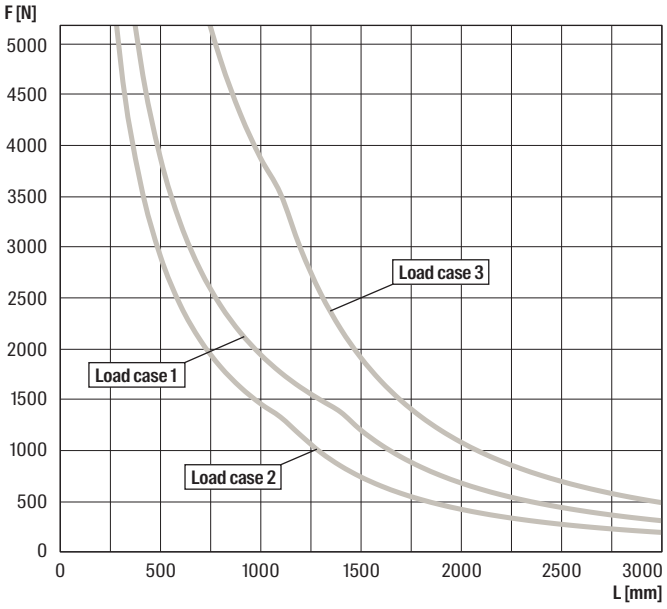


## FUS 41/2,5

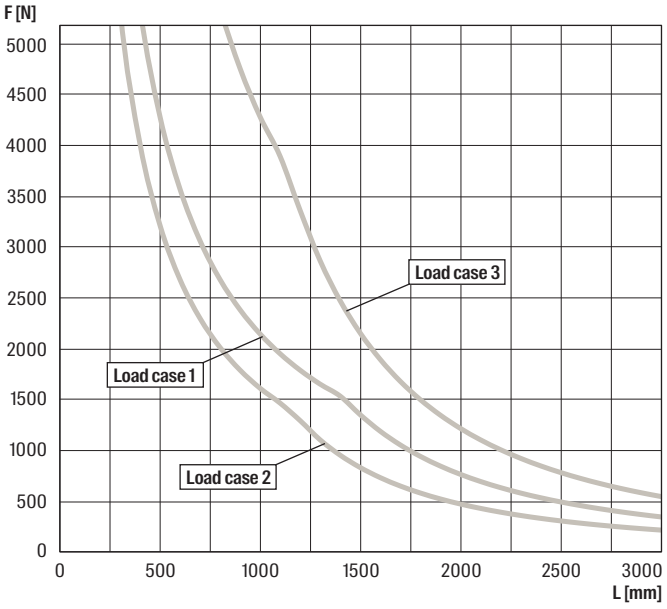


For the load curves, the permissible steel strain $\delta_{adm.}$ = 188 N/mm and the maximum deflection under load L/200 are not exceeded. Fixings and screw fastenings must be calculated accordingly. The increased yield strength is calcuated according DIN EN 1993-1-3:2010-12, sec. 3.2.2.

## FUS 62/2,5

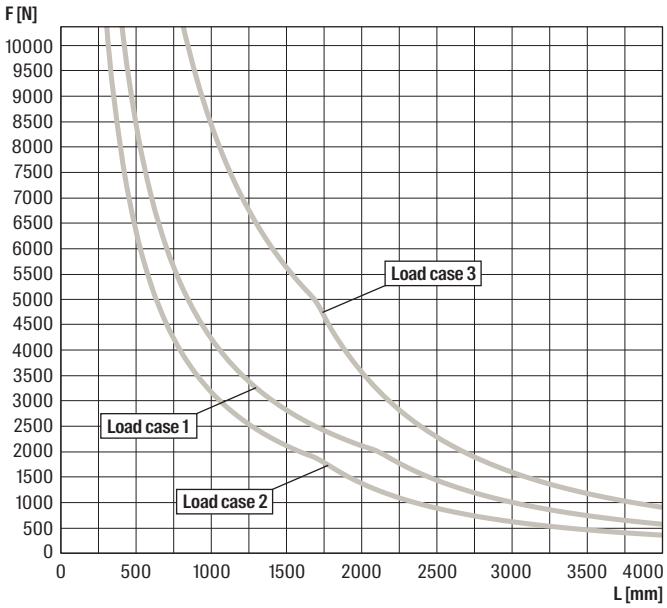


## FUS 21D/2,0

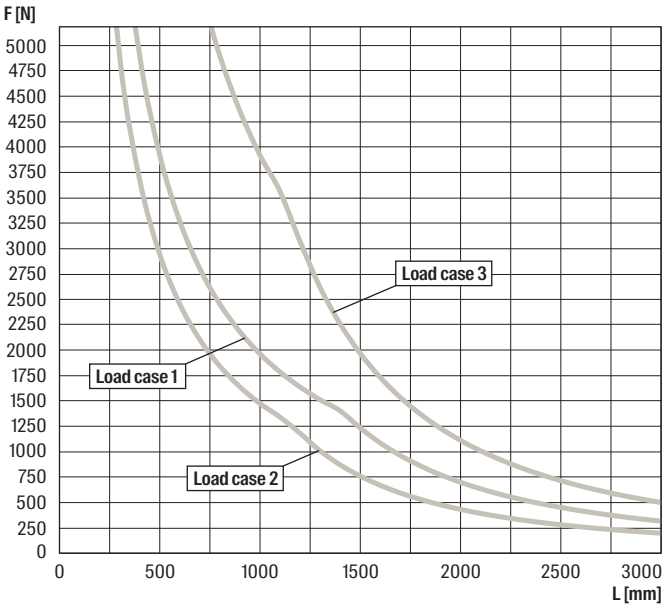


For the load curves, the permissible steel strain $\delta_{adm.}$ = 188 N/mm and the maximum deflection under load L/200 are not exceeded. Fixings and screw fastenings must be calculated accordingly. The increased yield strength is calcuated according DIN EN 1993-1-3:2010-12, sec. 3.2.2.

## FUS 41D/2,5

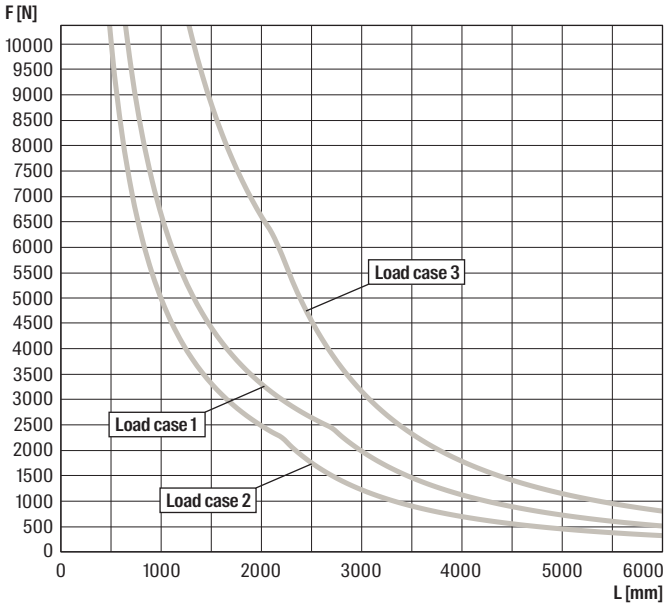


## FUS 62D/2,5

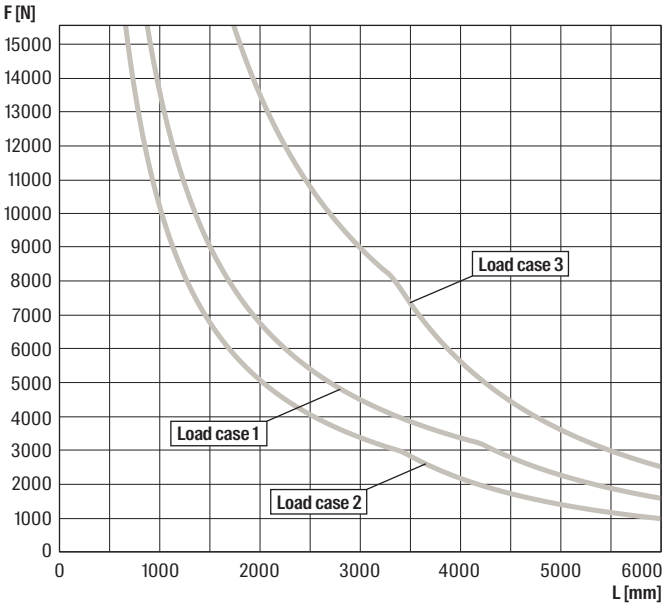


For the load curves, the permissible steel strain $\delta_{adm.}$ = 188 N/mm and the maximum deflection under load L/200 are not exceeded. Fixings and screw fastenings must be calculated accordingly. The increased yield strength is calcuated according DIN EN 1993-1-3:2010-12, sec. 3.2.2.

# Channel connector FUF OC and PFUF OC

Construction element - Channel connector FUF OC and PFUF OC



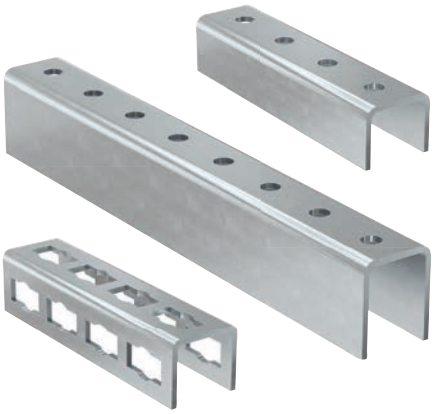

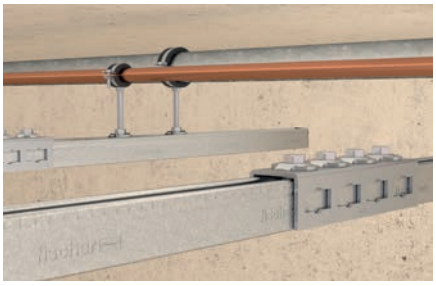

Connector for installation grid

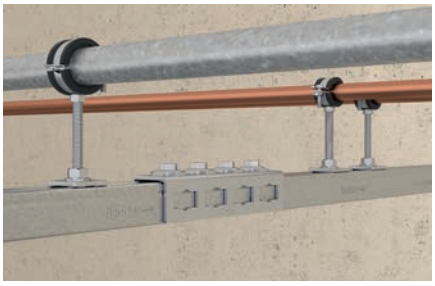

Longitudinal channel connection

## Applications

- Connection and precise alignment of channels.
- For use in dry interior areas.

## Advantages

- The FUF OC connector in combination with FCN Clix P allows a simple and time-saving installation.
- The PFUF OC connector in combination with PFCN allows a simple and time-saving installation.

## Properties

- Material FUF OC: steel S235JR (material no. 1.0037) acc. to DIN EN 10025
- Zinc plating FUF OC: electro zinc-plated
- Material PFUF OC: steel DD11 (material no. 1.0332) acc. to DIN EN 10111
- Zinc plating PFUF OC: electro zinc-plated

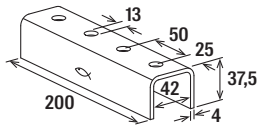


FUF OC 41

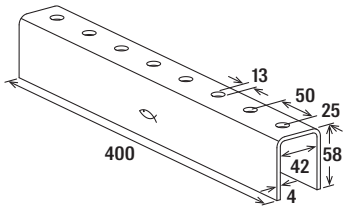


FUF OC 62

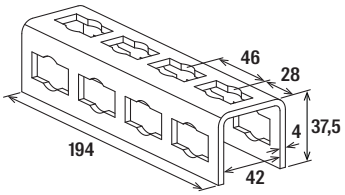


PFUF OC

## Technical data

| Item | Item no. | Length L [mm] | Sales unit [pcs] |
|---|---|---|---|
| **FUF OC 41** | **504517** | 200 | 20 |
| **FUF OC 62** | **504518** | 400 | 10 |
| **PFUF OC** | **533743** | 194 | 6 |

# Socket wrench FSK

FSK socket wrench SW 17 long, the solution for tightening in the FUS mounting channels






## Applications

- Installation of the fischer FUS channel system.
- Tightening anchor bolts and plugs.

## Advantages

- The socket wrench FSK fits perfectly through the open side of the
- FUS mounting channel.
- The two snap-in holes between the impact wrench insert and ½“ socket ensure increased connection accuracy.
- The long length of the socket wrench FSK allows it to be used for the FUS mounting channels 21, 41 and 62.

## Properties

- Material: quenched and tempered steel 42CrMo4 according to EN 10083-3 (material no. 1.7225)
- Coating: black phosphatized

## Technical data

| | Item no. | Length L [mm] | Width across nut SW [mm] | Drive | For profile | Sales unit [pcs] |
|---|---|---|---|---|---|---|
| **Item** | | | | | | |
| **FSK Socket wrench SW17-1/2“ long** | **563656** | 100 | 17 | 1/2“ / SW17 | FUS 21, 41, 62 | 1 |

# Channel connector FDCC

Channel connector for easy preparation of FUS double channels





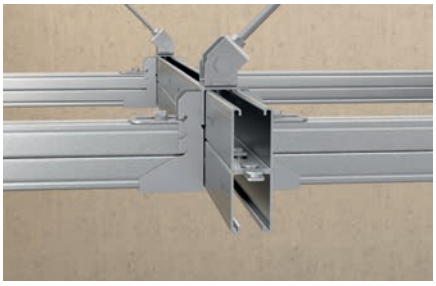

FUS double channel with channel connector

## Applications

- Easy construction of double channels made from the FUS channel assortment.
- Suitable for FUS channels FUS 41 and FUS 62 with thickness 2,0 and 2,5 mm.
- The connection of two single channels is made with the channel connector inside the channel slots.
- Each double channel has to be equipped with an FDCC at both ends and additional FDCCs in the given installation distance as per load chart.
- For use in dry interior areas.

## Advantages

- Easy connection of single channels back to back to build double channels.
- Simple solution to create individual double channels on job site.

## Properties

- Material base plate: JIS G3131-SPHE (similar to DD13 acc. to DIN EN 10111, material no. 1.0335)
- Material screw: steel grade 8.8
- Zinc plating: electro zinc-plated

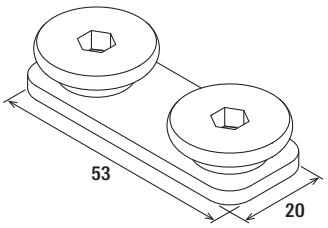


FDCC

## Technical data

| | Item no. | Thread A | Drive | Tightening torque $T_{inst}$ [Nm] | Sales unit [pcs] |
|---|---|---|---|---|---|
| **Item** | | | | | |
| **FDCC** | **546148** | M10 | Hexagon socket 5 mm | 25 | 100 |

## Load case 1

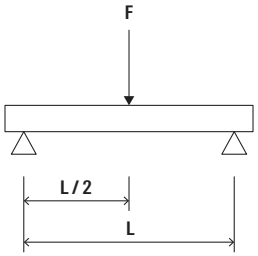




## FUS 41D/2,0 - 2,5

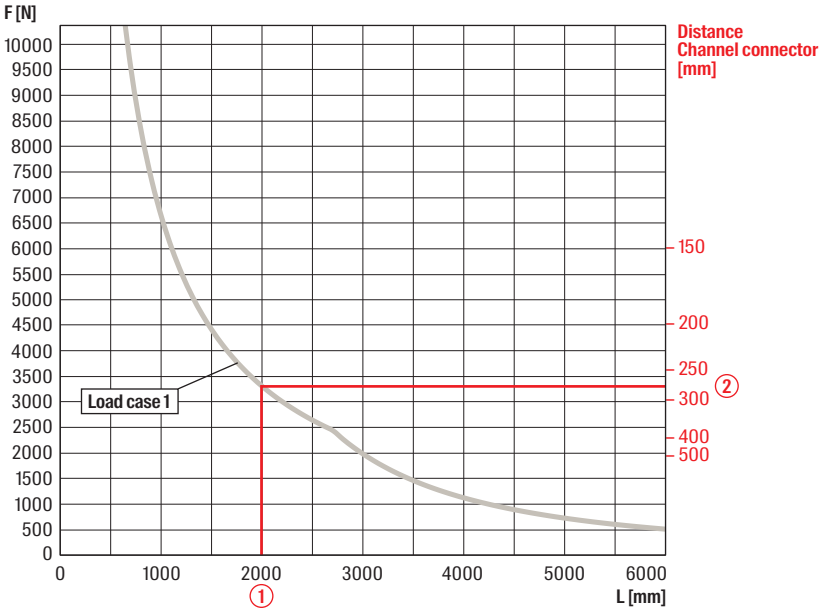


① Length of channel, i.e. 2000 mm for loadcase 1 (single load centric)
② Distance of channel connector (for intermediate values use the lower value, i.e. 250 mm)

## FUS 62D/2,5

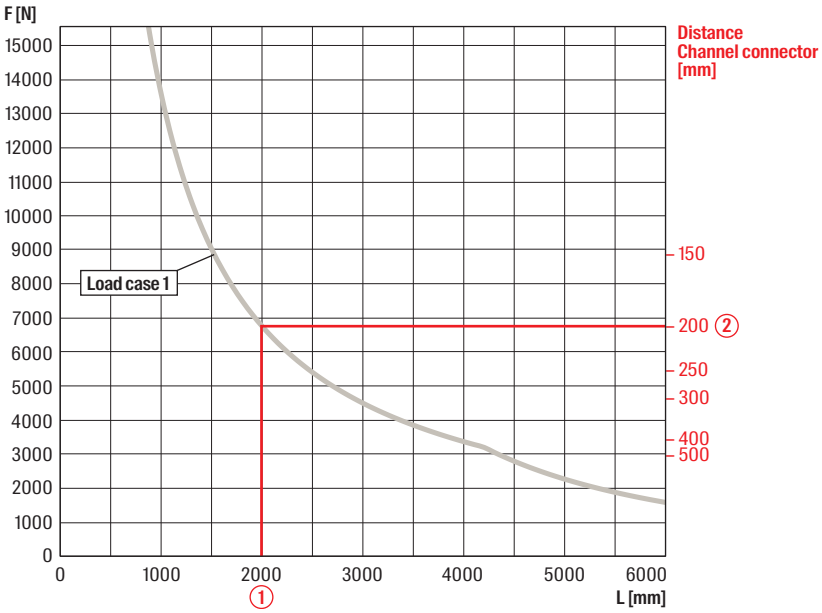


① Length of channel, i.e. 2000 mm for loadcase 1 (single load centric)
② Distance of channel connector (for intermediate values use the lower value)

# Cantilever arm FCA

FUS profiles with welded base plate for direct mounting on the base material





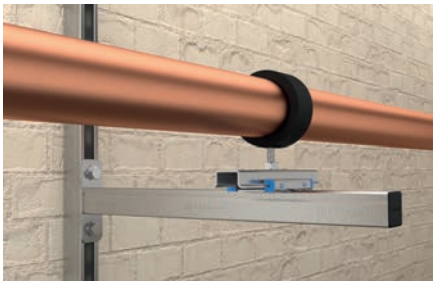

Refrigerant pipe clamp on sliding element



Heavy pipe on cantilever

## Applications

- Quick and easy installation of pipelines (e.g. along the wall)
- For use in dry indoor areas.

## Certificates

R 120

R 30 MLAR

## Advantages

- The fire inspection report in line with MLAR/EN13501 guarantees independently tested functional safety.
- The graduated range of lengths allows for an ideal adaptation to the application.
- The arm's solid base plate offers a secure hold for load-bearing construction.
- The base plate's long slots, which are at 90° to one another, allow the arm to be easily aligned.
- The stamped serration in the channel gives the sliding nuts a secure hold for high shear loads, e.g. for vertical installation.

## Properties

- Material: steel S235JR (material no. 1.0037) acc. to DIN EN 10025
- Zinc plating: electro zinc-plated

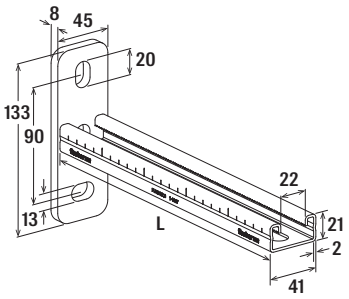


FCA 21/2.0

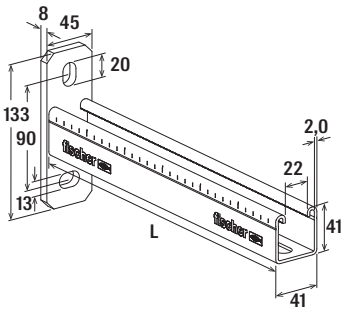


FCA 41/2.0

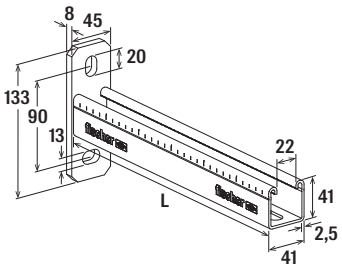


FCA 41/2.5

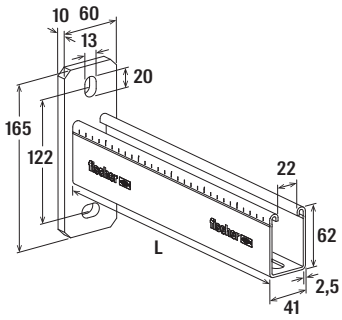


FCA 62/2.5

## Technical data

| Item | Item no. | Fire test report | Profile | Length L [mm] | Sales unit [pcs] |
|---|---|---|---|---|---|
| **FCA 21/2.0 - 200** | **537207** | – | 21 / 2.0 | 200 | 1 |
| **FCA 21/2.0-300** | **537208** | – | 21 / 2.0 | 300 | 1 |
| **FCA 21/2.0 - 450** | **537209** | – | 21 / 2.0 | 450 | 1 |
| **FCA 41/2.0 - 300** | **559915** | – | 41 / 2,0 | 300 | 1 |
| **FCA 41/2.0 - 450** | **559916** | – | 41 / 2,0 | 450 | 1 |
| **FCA 41/2.0 - 600** | **559917** | – | 41 / 2,0 | 600 | 1 |
| **FCA 41/2.0 - 750** | **559918** | – | 41 / 2,0 | 750 | 1 |
| **FCA 41/2.0 - 1,000** | **559919** | – | 41 / 2,0 | 1,000 | 1 |
| **FCA 41/2.5 - 300** | **077359** | Yes | 41 / 2.5 | 300 | 1 |
| **FCA 41/2.5 - 450** | **077361** | Yes | 41 / 2.5 | 450 | 1 |
| **FCA 41/2.5 - 600** | **077363** | Yes | 41 / 2.5 | 600 | 1 |
| **FCA 41/2.5 - 750** | **077365** | Yes | 41 / 2.5 | 750 | 1 |
| **FCA 62/2.5 - 1,000** | **504315** | Yes | 62 / 2.5 | 1,000 | 1 |

For load information under fire exposure, see chapter Basic knowledge.

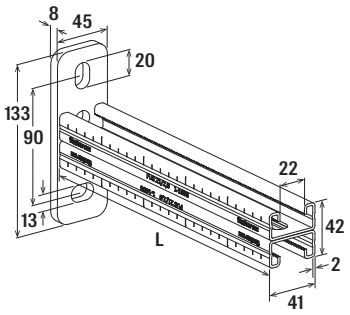


FCA 21D/2.0

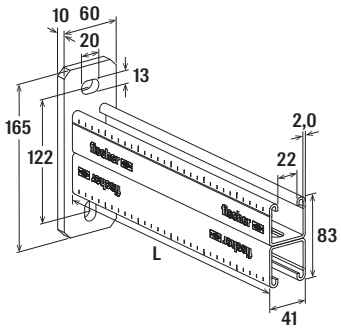


FCA 41D/2.0

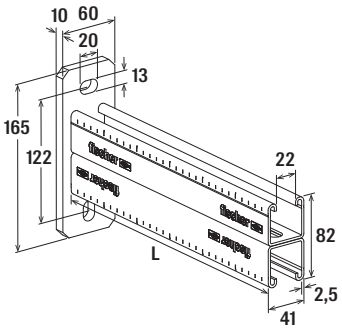


FCA 41D/2.5

4

## Technical data

| Item | Item no. | Profile | Length L [mm] | Sales unit [pcs] |
|---|---|---|---|---|
| FCA 21D/2.0 - 300 | 536978 | 21D / 2.0 | 300 | 1 |
| FCA 21D/2.0 - 450 | 536979 | 21D / 2.0 | 450 | 1 |
| FCA 21D/2.0 - 600 | 536980 | 21D / 2.0 | 600 | 1 |
| FCA 41D/2,0 - 750 | 559920 | 41D / 2,0 | 750 | 1 |
| FCA 41D/2,0 - 1000 | 559921 | 41D / 2,0 | 1,000 | 1 |
| FCA 41D/2.5 - 750 | 504317 | 41D / 2.5 | 750 | 1 |
| FCA 41D/2.5 - 1,000 | 504319 | 41D / 2.5 | 1,000 | 1 |

## Loads

| Item | Item no. | Max. recommended static load load case 1 $F_{rec}$ [kN] | Max. recommended static load load case 2 $F_{rec}$ [kN] | Max. recommended static load load case 3 $F_{rec}$ [kN] | Sales unit [pcs] |
|---|---|---|---|---|---|
| FCA 21/2.0 - 200 | 537207 | 1.43 | 0.72 | 1.43 | 1 |
| FCA 21/2.0-300 | 537208 | 0.95 | 0.45 | 0.95 | 1 |
| FCA 21/2.0 - 450 | 537209 | 0.65 | 0.21 | 0.65 | 1 |
| FCA 41/2.0 - 300 | 559915 | 1.80 | 0.90 | 1.80 | 1 |
| FCA 41/2.0 - 450 | 559916 | 1.20 | 0.60 | 1.20 | 1 |
| FCA 41/2.0 - 600 | 559917 | 0.90 | 0.45 | 0.90 | 1 |
| FCA 41/2.0 - 750 | 559918 | 0.72 | 0.36 | 0.72 | 1 |
| FCA 41/2.0 - 1,000 | 559919 | 0.54 | 0.23 | 0.54 | 1 |
| FCA 41/2.5 - 300 | 077359 | 1.80 | 0.90 | 1.80 | 1 |
| FCA 41/2.5 - 450 | 077361 | 1.20 | 0.60 | 1.20 | 1 |
| FCA 41/2.5 - 600 | 077363 | 0.90 | 0.45 | 0.90 | 1 |
| FCA 41/2.5 - 750 | 077365 | 0.72 | 0.36 | 0.72 | 1 |
| FCA 62/2.5 - 1,000 | 504315 | 1.25 | 0.62 | 1.25 | 1 |
| FCA 21D/2.0 - 300 | 536978 | 1.83 | 0.92 | 1.83 | 1 |
| FCA 21D/2.0 - 450 | 536979 | 1.24 | 0.62 | 1.24 | 1 |
| FCA 21D/2.0 - 600 | 536980 | 0.92 | 0.46 | 0.92 | 1 |
| FCA 41D/2,0 - 750 | 559920 | 2.50 | 1.25 | 2.50 | 1 |
| FCA 41D/2,0 - 1000 | 559921 | 1.90 | 0.93 | 1.90 | 1 |
| FCA 41D/2.5 - 750 | 504317 | 2.50 | 1.25 | 2.50 | 1 |
| FCA 41D/2.5 - 1,000 | 504319 | 1.90 | 0.93 | 1.90 | 1 |

## Load case 1

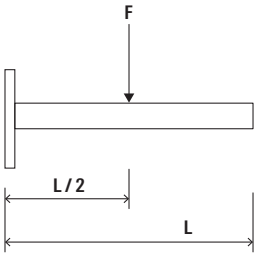


## Load case 2

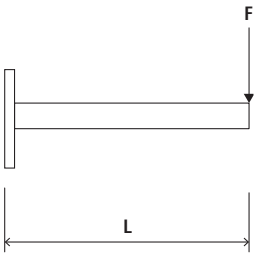


## Load case 3

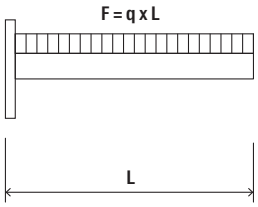


## FCA 21

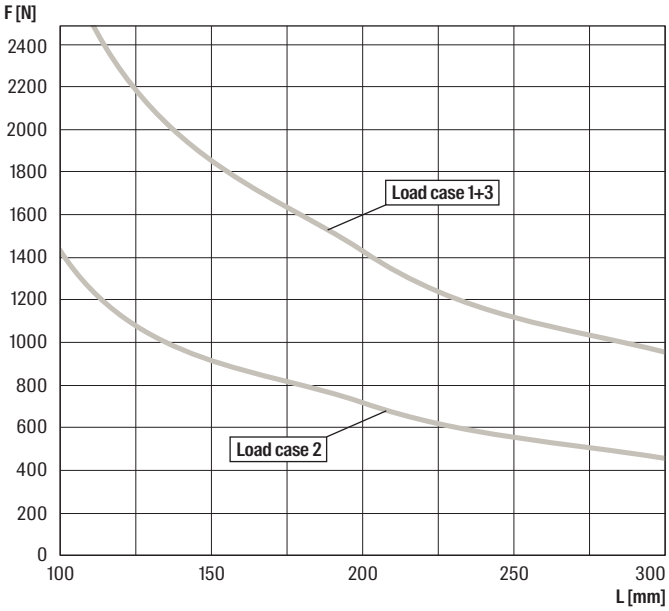


## FCA 41

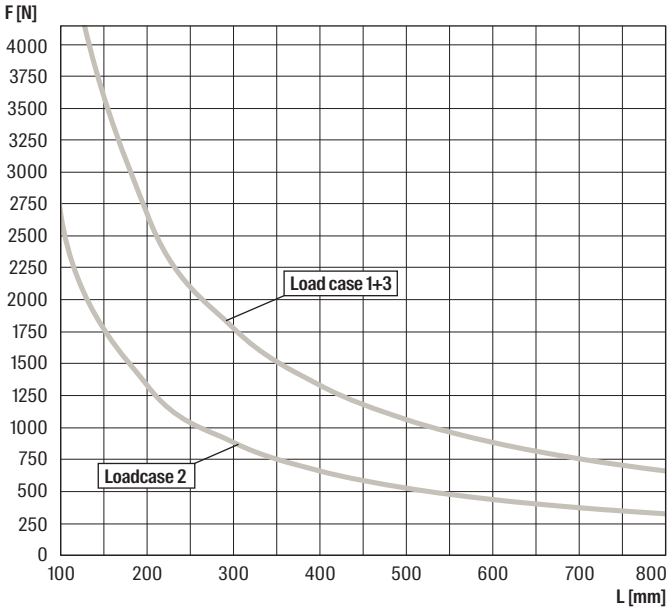


For the load curves, the permissible steel strain $\delta_{adm.}$ = 160 N/mm and the maximum deflection under load L/150 are not exceeded. Load values of the cantilever arms under consideration of the load capacity of the base plate. Fixings and screw fastenings must be calculated accordingly. The load curves are valid for all material thicknesses of the FCA brackets.

## FCA 62

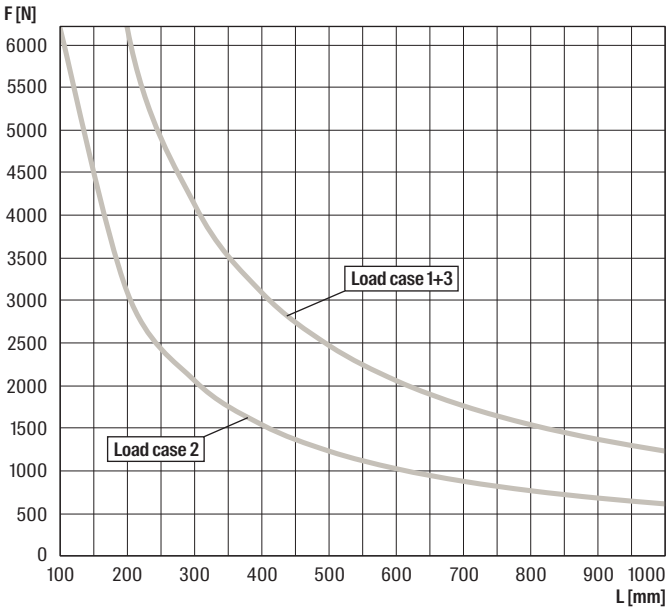


For the load curves, the permissible steel strain $\delta_{adm.}$ = 160 N/mm and the maximum deflection under load L/150 are not exceeded. Load values of the cantilever arms under consideration of the load capacity of the base plate. Fixings and screw fastenings must be calculated accordingly. The load curves are valid for all material thicknesses of the FCA brackets.

## FCA 21D

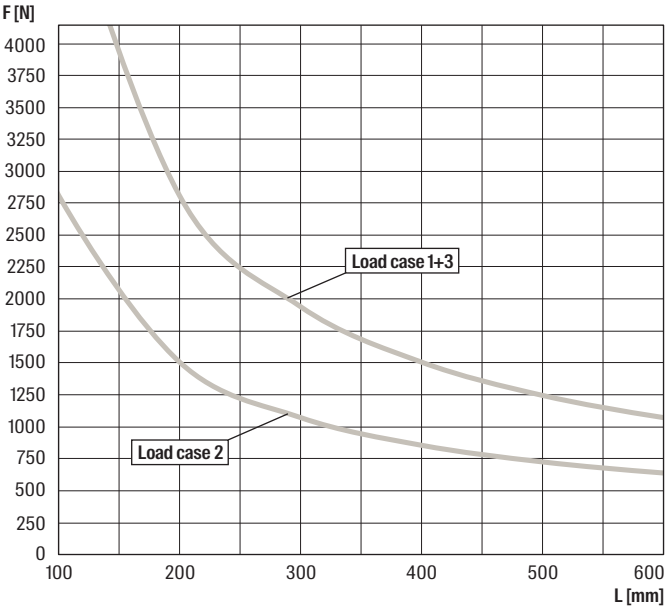


## FCA 41D

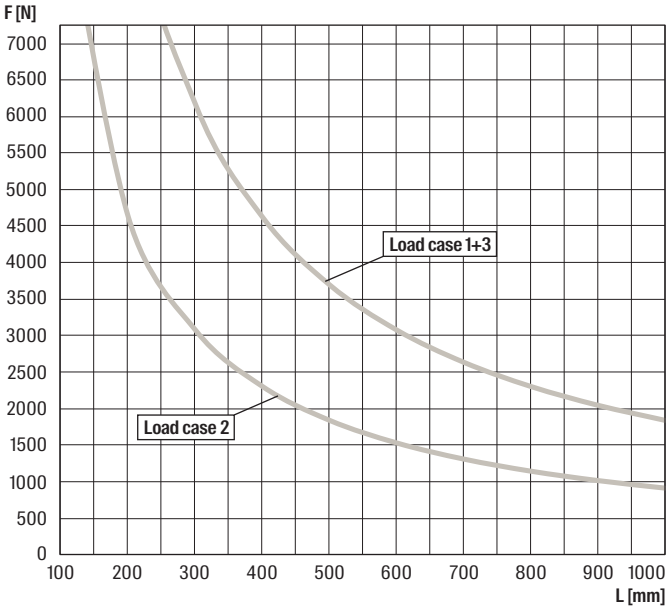


For the load curves, the permissible steel strain $\delta_{adm.}$ = 160 N/mm and the maximum deflection under load L/150 are not exceeded. Load values of the cantilever arms under consideration of the load capacity of the base plate. Fixings and screw fastenings must be calculated accordingly. The load curves are valid for all material thicknesses of the FCA brackets.

# Large cantilever arm FCAM

The large cantilever arm for heavy loads





Stiff pipe connection with base plate on cantilever arm



## Applications

- Quick and easy installation of pipelines with heavy loads, (e.g. along the wall).
- For use in dry interior areas.

## Advantages

- The robust construction, consisting of a basic and a support profile, allows for the bearing of heavy loads.
- The graduated range of lengths allows for an ideal adaptation to the application.
- The base plate's long slots, which are at 90° to one another, allow the arm to be easily aligned.
- The stamped serration in the channel gives the sliding nuts a secure hold for high shear loads, e.g. for vertical installation.

## Properties

- Material: steel S235JR (material no. 1.0037) acc. to DIN EN 10025
- Zinc plating: electro zinc-plated

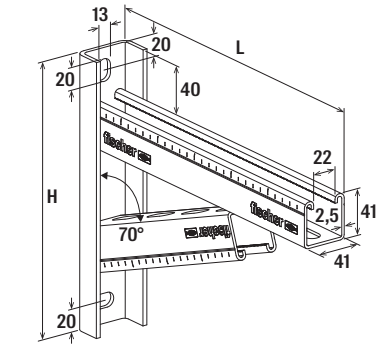


FCAM

## Technical data

| Item | Item no. | Length L [mm] | Height H [mm] | Sales unit [pcs] |
|---|---|---|---|---|
| FCAM 300 | 504477 | 300 | 246 | 1 |
| FCAM 400 | 504479 | 400 | 270 | 1 |
| FCAM 500 | 504480 | 500 | 284 | 1 |
| FCAM 600 | 504482 | 600 | 319 | 1 |
| FCAM 700 | 505460 | 700 | 343 | 1 |

## Loads

| Item | Item no. | Max. recommended static load load case 1 $F_{rec}$ [kN] | Max. recommended static load load case 2 $F_{rec}$ [kN] | Max. recommended static load load case 3 $F_{rec}$ [kN] | Sales unit [pcs] |
|---|---|---|---|---|---|
| **FCAM 300** | **504477** | 7.00 | 3.70 | 7.00 | 1 |
| **FCAM 400** | **504479** | 7.50 | 2.80 | 7.50 | 1 |
| **FCAM 500** | **504480** | 6.50 | 2.30 | 6.50 | 1 |
| **FCAM 600** | **504482** | 6.00 | 1.90 | 6.00 | 1 |
| **FCAM 700** | **505460** | 5.50 | 1.30 | 5.50 | 1 |



### Load case 1

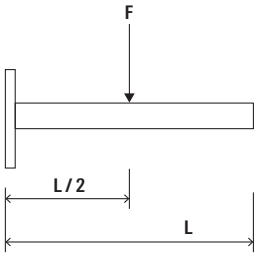


### Load case 2

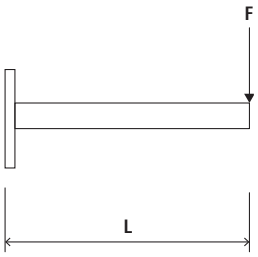


### Load case 3

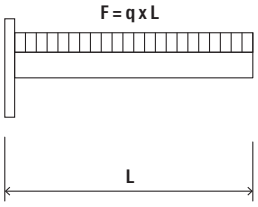

# Cover cap FEC

The form-flush cover cap, tailored to the FUS channel profiles for a safe termination





## Applications

- Closing for channel FUS and cantilever arms FCA and large cantilever arms FCAM.

## Advantages

- Suitable for channels FUS 21, FUS 41, FUS 62 and cantilever arms FCA and FCAM.

## Properties

- Material: PE polyethylene, colour black

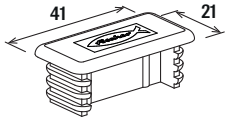


FEC 21 B

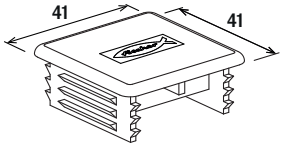


FEC 41 B

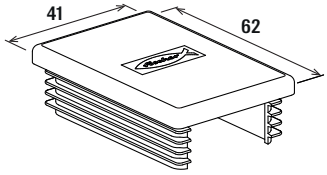


FEC 62 B

## Technical data

| Item | Item no. | For profile | Material | Sales unit [pcs] |
|---|---|---|---|---|
| **FEC 21 B** | **077357** | 41/21 | Polyethylene, black | 100 |
| **FEC 41 B** | **077355** | 41/41 | Polyethylene, black | 100 |
| **FEC 62 B** | **505551** | 41/62 | Polyethylene, black | 100 |

# Push-through connector PFCN

Push-through connector for the quickest and easiest connection of FUS profiles





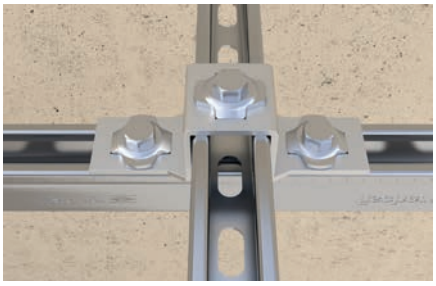

Cross connection on channel



Cantilever with saddle flange

## Applications

- Connection of FUS channels and construction elements by push-through principle.
- Universal fitting for all push-through connection elements and FUS profiles.
- For use in dry interior areas.

## Advantages

- The correct fit of the push-through connector and connection elements allows the quickest and easiest channel connection.
- The spring effect of the PFCN in set state guarantees a simple and precise positioning in the channel.
- The serration on the push-through connector provides a secure hold in the FUS channel.
- Installation by rotating 90° enables generally the post-installation in set channels.

## Properties

- Material cap: steel DD11 (material no. 1.0332) acc. to DIN EN 10111
- Material sliding nut: steel S420MC, EN 10149-2
- Material hexagon screw: 8.8 M10x28, DIN 933
- Material plastic parts: polypropylene
- Zinc plating: electro zinc-plated

## Installation PFCN

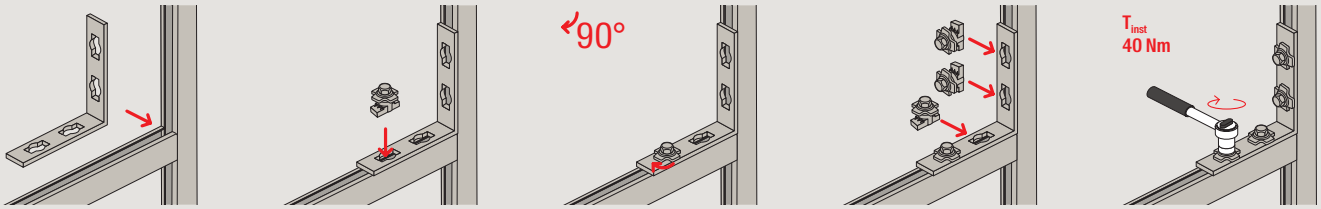

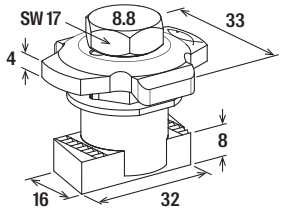


PFCN

## Technical data

| | Item no. | Thread<br>A | Sales unit<br>[pcs] |
|---|---|---|---|
| Item | | | |
| PFCN 41 | 533739 | M10 | 50 |

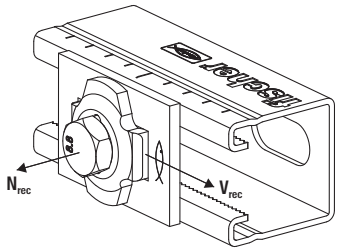


PFCN

## Loads

| | Item no. | Max. recommended tension load for FUS 1,5 mm<br>$N_{rec}$<br>[kN] | Max. recommended tension load for FUS 2,0 mm<br>$N_{rec}$<br>[kN] | Max. recommended tension load for FUS 2,5 mm<br>$N_{rec}$<br>[kN] | Max. recommended shear load for FUS 1,5 mm<br>$V_{rec}$<br>[kN] | Max. recommended shear load for FUS 2,0 mm<br>$V_{rec}$<br>[kN] | Max. recommended shear load for FUS 2,5 mm<br>$V_{rec}$<br>[kN] | Tightening torque for screw grade ≥ 8.8<br>$T_{inst}$<br>[Nm] | Sales unit<br>[pcs] |
|---|---|---|---|---|---|---|---|---|---|
| Item | | | | | | | | | |
| PFCN 41 | 533739 | 4.0 | 5.0 | 7.0 | 4.0 | 4.5 | 5.0 | 40 | 50 |

# Saddle flange PSF

Construction element - Saddle flange PSF



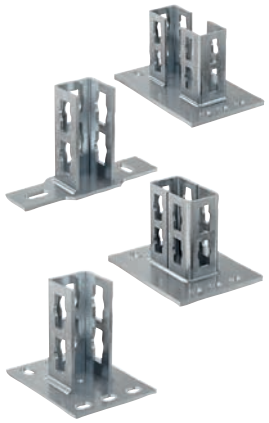



Pipe installation in escape route



Cantilever with saddle flange

## Applications

- Stable construction of connections between channels and building structures for the push-through system.
- For use in dry interior areas.

## Advantages

- The perfect-fit saddle allows a simple installation by inserting the mounting channels
- The saddle flange‘s stable design offers a secure hold for a load-bearing construction

## Properties

- Material: steel DD11 (material no. 1.0332) acc. to DIN EN 10111
- Zinc plating: electro zinc-plated

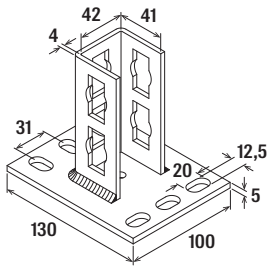


PSF 41

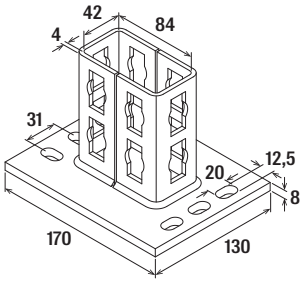


PSF 82

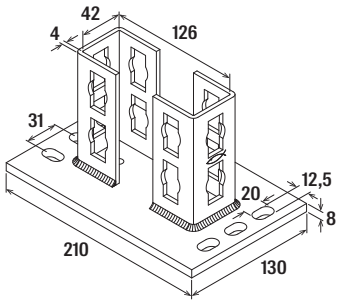


PSF 124

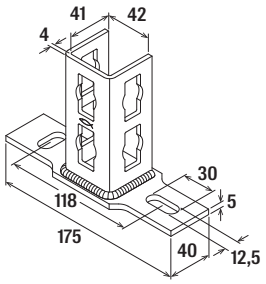


PSFQ 41

## Technical data

| Item | Item no. | For profile | Sales unit [pcs] |
|---|---|---|---|
| **PSF 41** | **533740** | 21D, 41, 62 | 10 |
| **PSF 82** | **533741** | 41 | 5 |
| **PSF 124** | **533742** | 62 | 5 |
| **PSFQ 41** | **535266** | 41 | 10 |

See push-through connector PFCN for loads.

# Universal bracket PUWS

Construction element - Universal bracket PUWS



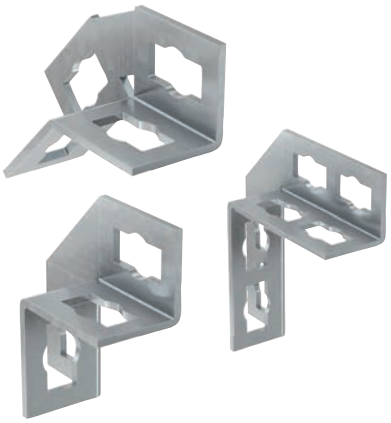



3D-frame constructions

## Applications

- Reinforcement of supporting structures for the push-through system.
- For use in dry interior areas.

## Advantages

- The universal brackets for the connection of FUS channels gives a supporting structure, great stability and safety (we recommend using in pairs).
- Simple creation of channel constructions in connection with FUS channels and PFCN 41.
- Quick assembly by 90° rotation of the push-through connector PFCN 41 in the channel.

## Properties

- Material: steel DD11 (material no. 1.0332) acc. to DIN EN 10111
- Zinc plating: electro zinc-plated

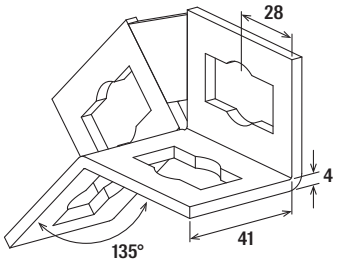


PUWS 2 x 2/135°

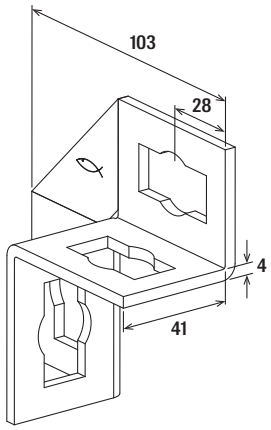


PUWS 2 x 2

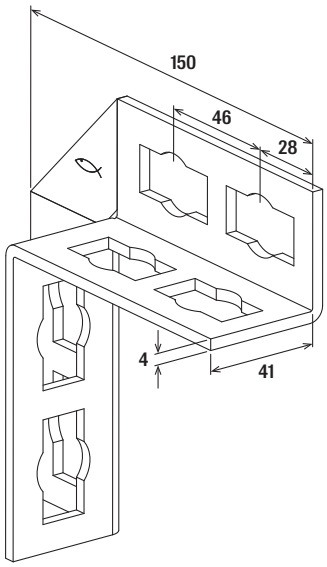


PUWS 4 x 4

## Technical data

| Item | Item no. | | Sales unit [pcs] |
|---|---|---|---|
| **PUWS 2 x 2/135°** | **533731** | | 10 |
| **PUWS 2 x 2** | **533733** | | 10 |
| **PUWS 4 x 4** | **533734** | | 8 |

See push-through connector PFCN for loads

# Angle bracket PWK

Construction element - Angle bracket PWK







Solid frame construction



Solid frame construction

## Applications

- Reinforcement in the push-through system and for lateral fixing to the substrate.
- For use in dry interior areas.

## Advantages

- The stable angle bracket ensures a supporting structure with a very high level of stability and safety.
- Simple creation of channel constructions in connection with FUS channels and PFCN 41.
- Quick assembly by 90° rotation of the push-through connector PFCN 41 in the channel.

## Properties

- Material: steel DD11 (material no. 1.0332) acc. to DIN EN 10111
- Zinc plating: electro zinc-plated

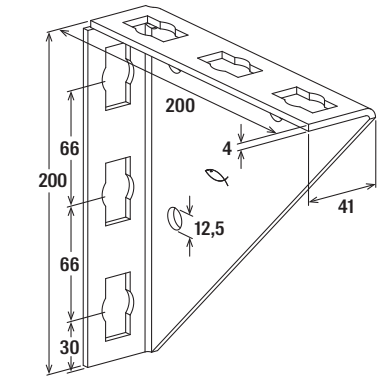


PWK 200

## Technical data

| Item | Item no. | | Sales unit [pcs] |
|---|---|---|---|
| PWK 200/200 | 533744 | | 15 |

See push-through connector PFCN for loads.

# Angle bracket fire-tested PUWF

Construction element - Angle bracket fire-tested PUWF



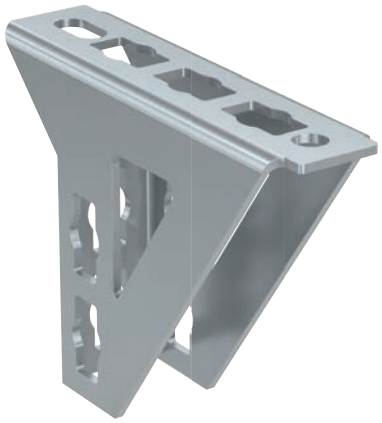



Frame construction for ceiling suspension with one level



Frame construction for ceiling suspension with two levels

## Applications

- Unique construction element for use as a connection to the substrate and for 90° angle connections.
- Allows the construction of applications with or without fire resistance requirements.
- For use in dry interior areas.

## Certificates

R 120

R 30 MLAR

## Advantages

- The fire test report in accordance with MLAR/EN1366 guarantees objectively tested functional safety.
- The stable design of the angle bracket allows high loads and ensures a secure hold. (use in pairs is recommended).
- Quick installation thanks to 90° rotation of the PFCN 41 push-through connector in the channel.
- The hole geometry allows the angle bracket to be attached to the FUS mounting channel in 3 positions with identical load-bearing capacity.

## Properties

- Material: steel acc. to DIN EN 10025-2 (material no. 1.0038)
- Zinc plating: electro zinc-plated

## U-frame construction type 1

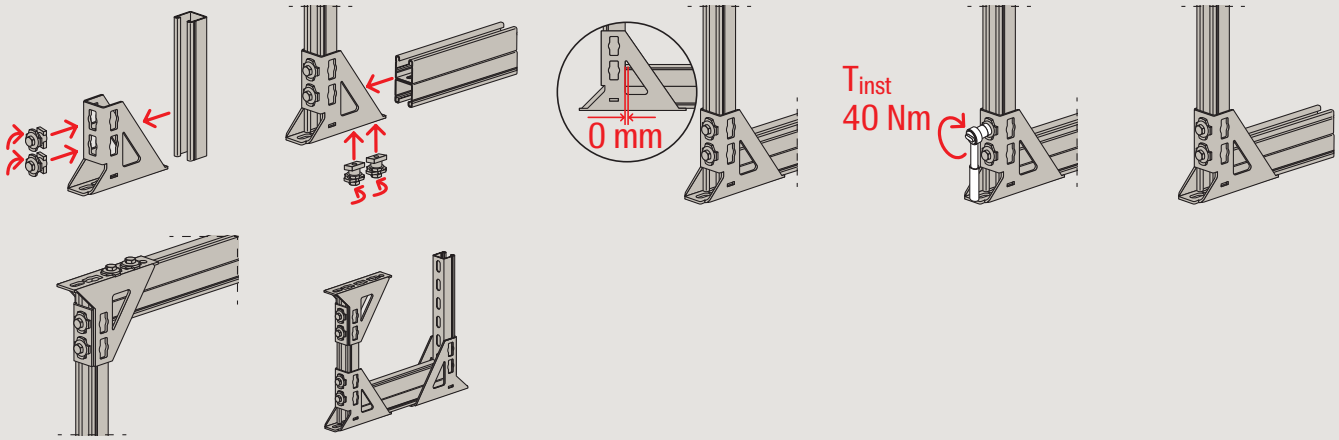

## U-frame construction type 2

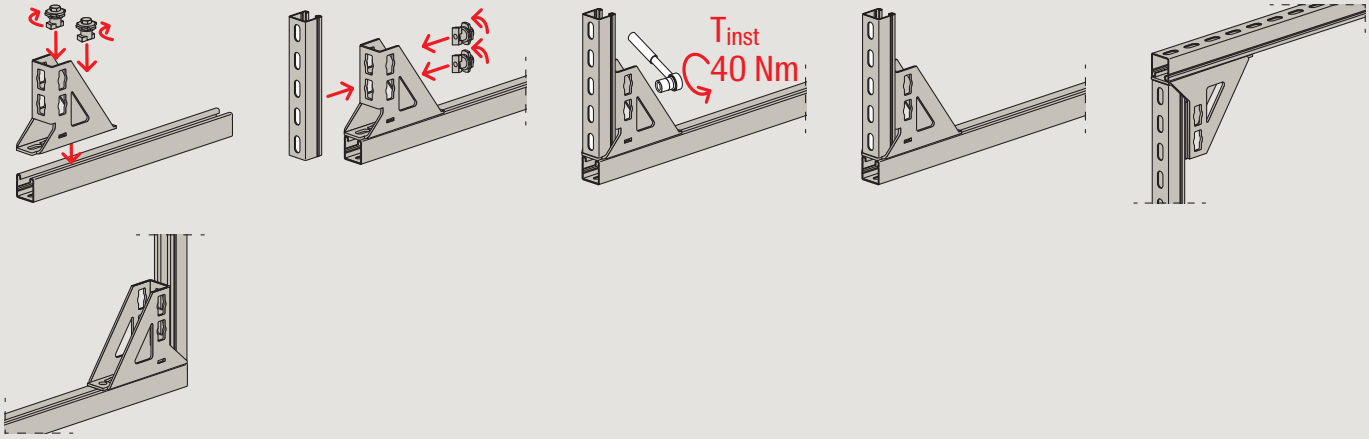


## U-frame construction type 3

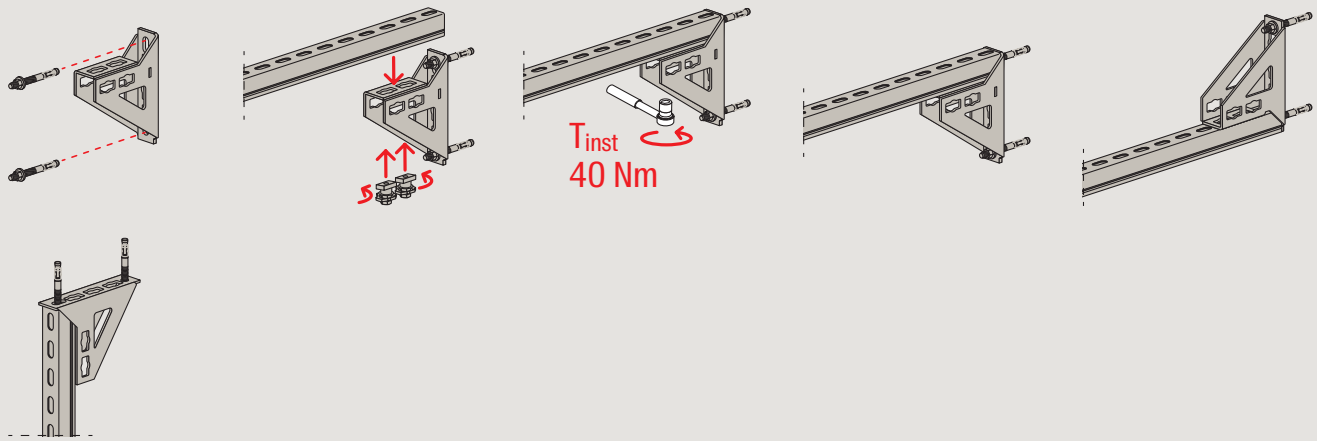


## Substrate connection type 1

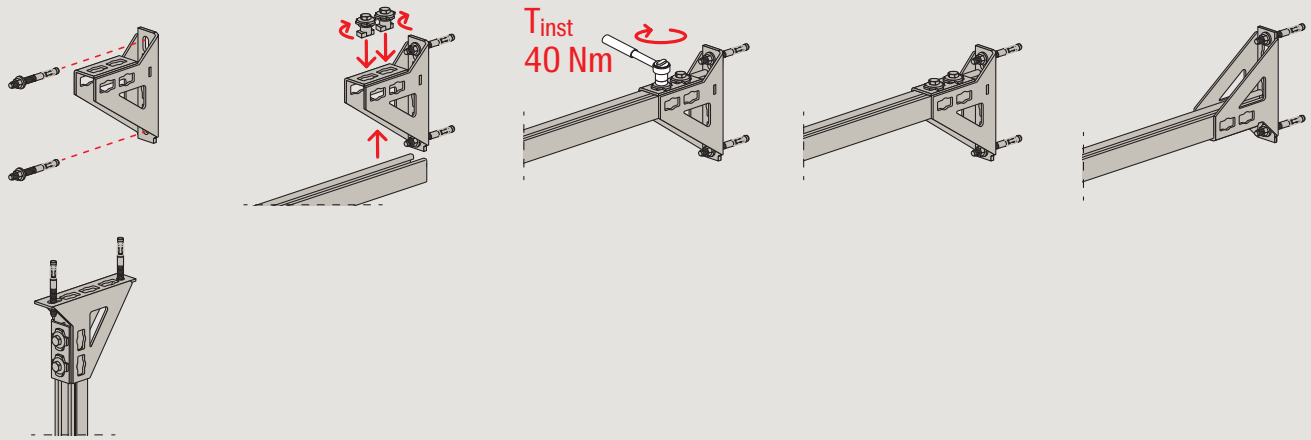

## Substrate connection type 2

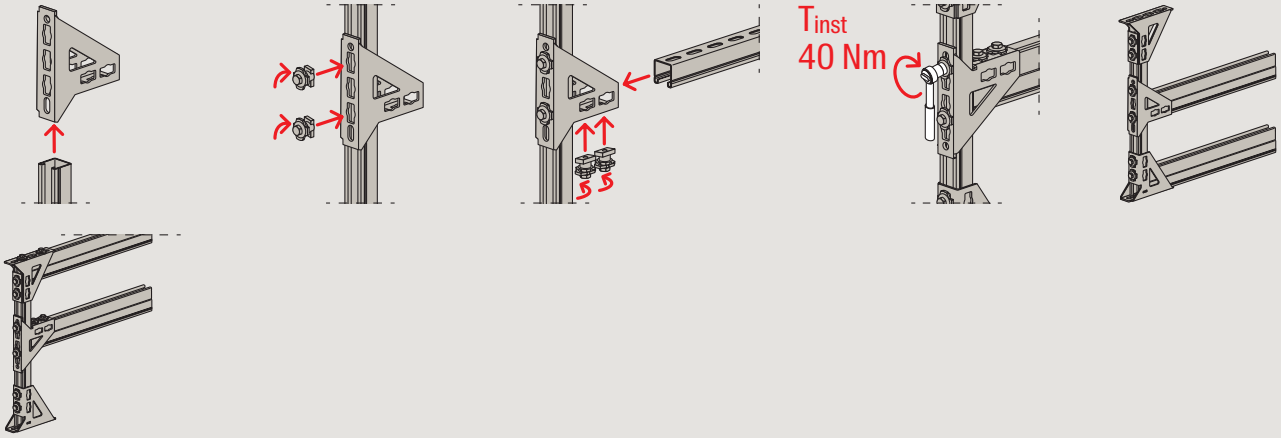

## Substrate connection type 3

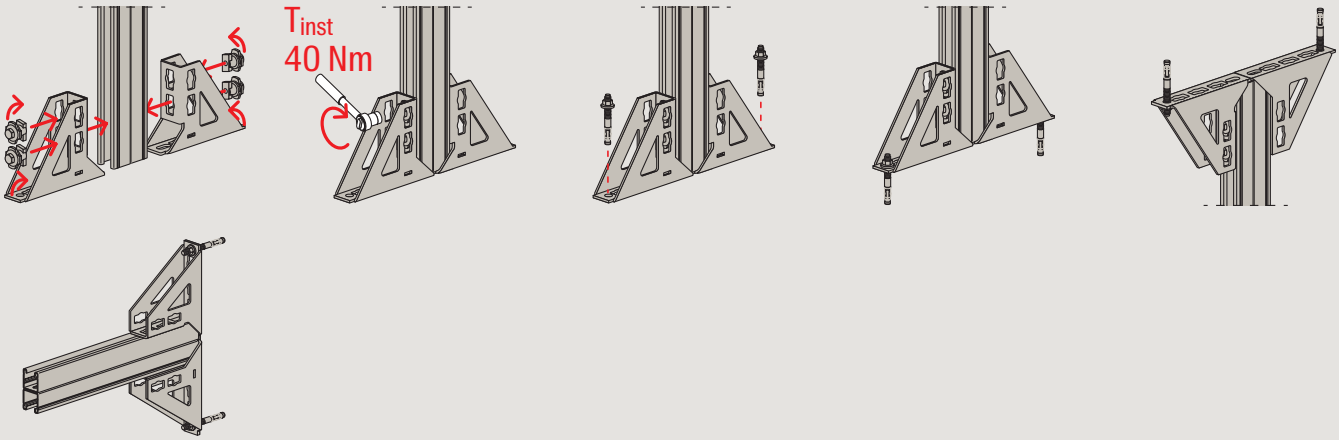

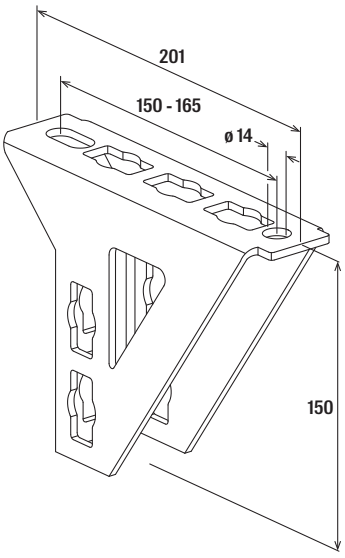


PUWF

## Technical data

| | Item no. | Fire test report | For profile | Sales unit [pcs] |
|---|---|---|---|---|
| **Item** | | | | |
| **Angle bracket fire-tested PUWF** | **571851** | Yes | FUS 21D, 41, 62, 41D | 10 |

## Loads

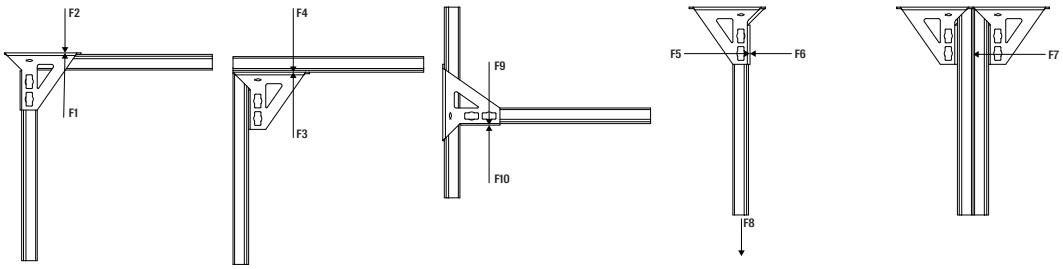


| | Item no. | Max. recommended load | | | | | | | | | |
|---|---|---|---|---|---|---|---|---|---|---|---|
| | | $F1_{rec}$ [kN] | $F2_{rec}$ [kN] | $F3_{rec}$ [kN] | $F4_{rec}$ [kN] | $F5_{rec}$ [kN] | $F6_{rec}$ [kN] | $F7_{rec}$ [kN] | $F8_{rec}$ [kN] | $F9_{rec}$ [kN] | $F10_{rec}$ [kN] |
| **Item** | | | | | | | | | | | |
| **PUWF** | **571851** | 7,04 | 4,89 | 6,18 | 5,23 | 8,65 | 15,18 | 16,51 | 8,29 | 6,1 | 4,81 |

Please note: Load tables for fire testing see chapter „Basics - good to know“.

# Variable bracket PVB

Construction elements - Variable bracket PVB







Massive bracing of cantilever arm

## Applications

- Variable angular positioning of profile support in the push-through system.
- Bracket for installation with FUS channels from 0° to 180°.
- For use in dry interior areas.

## Advantages

- The design of the variable bracket PVB enables the fixation of mounting channels at an angle of 0° to 180°.
- The holes in the connecting element make it compatible with the push-through connector PFCN.
- The punched holes in the base plate allow the direct fixing onto a wall, ceiling or onto a mounting channel by screw or anchor.

## Properties

- Material: steel DD11 (material no. 1.0332) acc. to DIN EN 10111
- Zinc plating: electro zinc-plated

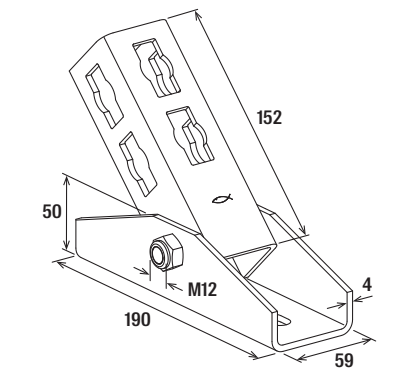


PVB

## Technical data

| Item | Item no. | | Sales unit [pcs] |
|---|---|---|---|
| PVB | 534960 | | 5 |

See push-through connector PFCN for loads.

# Bracing elements PSAE

Construction elements – Bracing elements PSAE 300 and 500







Supported channel

## Applications

- Elements for stable cantilever constructions made of FUS channels or FCA cantilever arms with push-through connector PFCN.
- For use in dry interior areas.

## Advantages

- The stable bracing element PSAE gives the supporting structure very high stability and safety.
- The holes in the base plate of the element make it compatible with the push-through connector PFCN.
- An additional PU-washer allows for fixing of elements with formholes directly onto a wall or ceiling by anchor or screw.
- Quick assembly by 90° rotation of the push-through connector PFCN 41 in the channel.

## Properties

- Material: steel P235TR2 (material no. 1.0255) acc. to EN 10216-1
- Zinc plating: electro zinc-plated

## Installation PSAE

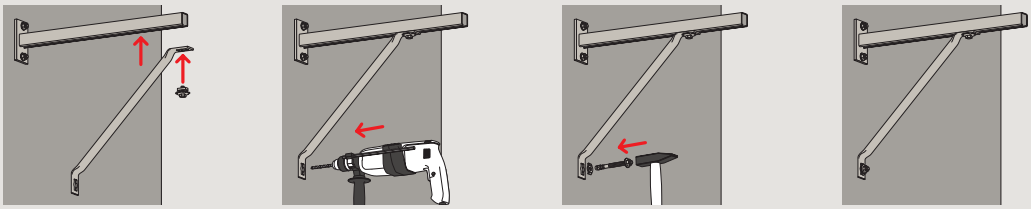

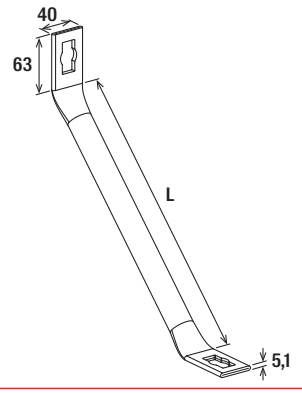


PSAE

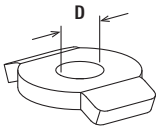


PU

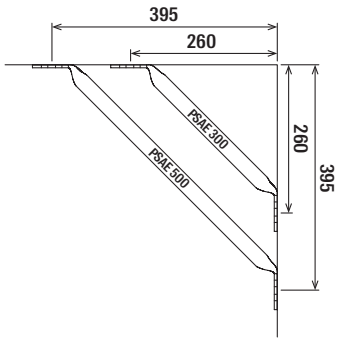


PSAE 300 and PSAE 500

## Technical data

| Item | Item no. | Length L [mm] | Hole-Ø D [mm] | Sales unit [pcs] |
|---|---|---|---|---|
| **PSAE 300** | **535269** | 300 | – | 10 |
| **PSAE 500** | **535270** | 500 | – | 10 |
| **PU 10.5** | **535271** | – | 10.5 | 50 |
| **PU 12.5** | **535272** | – | 12.5 | 50 |

See push-through connector PFCN for loads.

# Bracket PFFF

Construction elements - Brackets PFFF



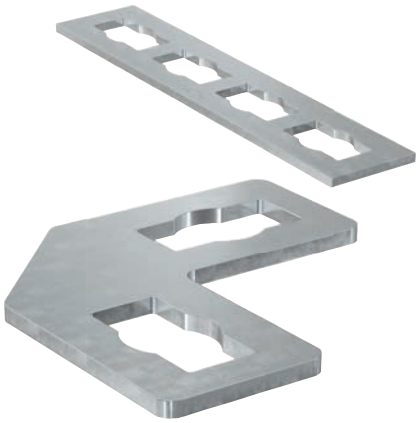



Waste water pipe

## Applications

- Arrangement of simple channel constructions in the push-through system.
- For use in dry interior areas.

## Advantages

- The holes in the connecting elements make them compatible with the push-through connector PFCN.
- Simple creation of channel constructions in connection with FUS channels and PFCN 41.
- Quick assembly by 90° rotation of the push-through connector PFCN 41 in the channel.

## Properties

- Material: steel DD11 (material no. 1.0332) acc. to DIN EN 10111
- Zinc plating: electro zinc-plated

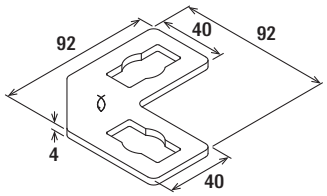


PFFF 2L

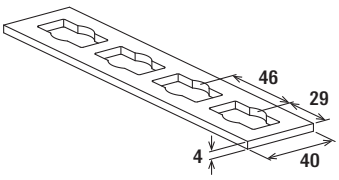


PFFF 4L

## Technical data

| Item | Item no. | | Sales unit [pcs] |
|---|---|---|---|
| **PFFF 2L** | **533745** | | 20 |
| **PFFF 4L** | **535268** | | 25 |

See push-through connector PFCN for loads.

# Bracket PFAF

Construction elements - angle brackets PFAF



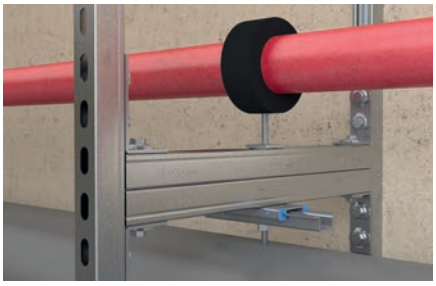

Frame constructions

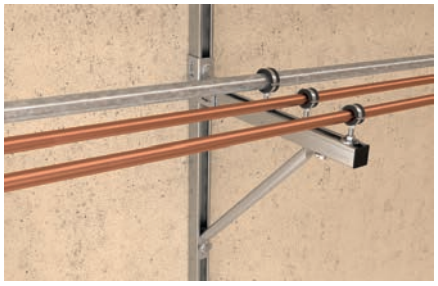

Lightweight installation on cantilever



## Applications

- Arrangement of simple channel constructions in the push-through system.
- For use in dry interior areas.

## Advantages

- The holes in the connecting elements make them compatible with the push-through connector PFCN.
- Simple creation of channel constructions in connection with FUS channels and PFCN 41.
- Quick assembly by 90° rotation of the push-through connector PFCN 41 in the channel.

## Properties

- Material: steel DD11 (material no. 1.0332) acc. to DIN EN 10111
- Zinc plating: electro zinc-plated

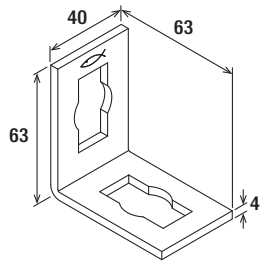


PFAF 2

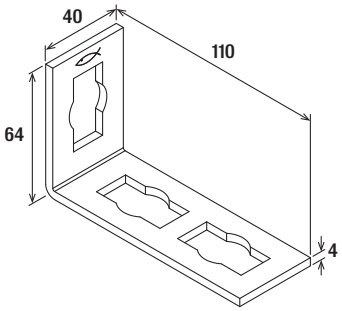


PFAF 3

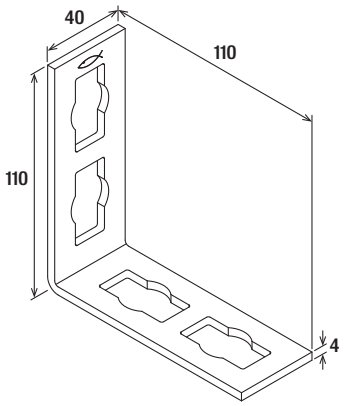


PFAF 4

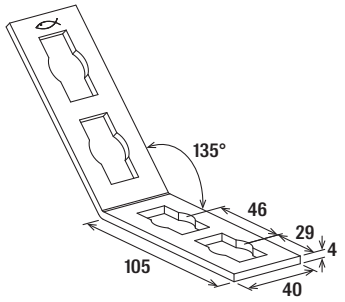


PFAF 4/135°

## Technical data

| Item | Item no. | | Sales unit [pcs] |
|---|---|---|---|
| **PFAF 2** | **533735** | | 25 |
| **PFAF 3** | **533736** | | 25 |
| **PFAF 4** | **535267** | | 25 |
| **PFAF 4/135°** | **533737** | | 20 |

See push-through connector PFCN for loads.

# Bracket PFUF

Construction elements - Bracket PFUF

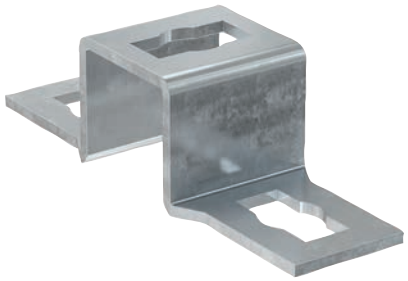

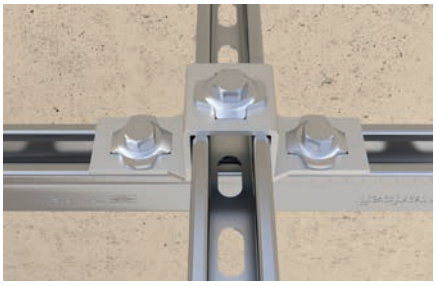

Cross connection on channel

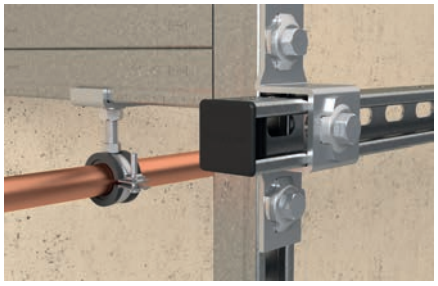

Cross connection on channel



## Applications

- Connecting element for the production of multi-dimensional constructions with FUS channels using push-through connector PFCN.
- For use in dry interior areas.

## Advantages

- The various shapes of the connecting elements offer flexibility during the installation of channel constructions.
- The holes in the connecting elements make them compatible with the push-through channel nut PFCN.
- Simple creation of channel constructions in connection with FUS channels and PFCN 41.
- Quick assembly by 90° rotation of the push-through connector PFCN 41 in the channel.

## Properties

- Material: steel DD11 (material no. 1.0332) acc. to DIN EN 10111
- Zinc plating: electro zinc-plated

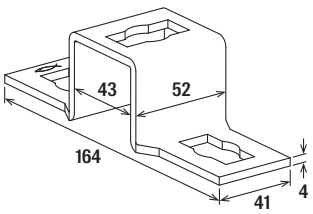


PFUF 41

## Technical data

| Item | Item no. | | Sales unit [pcs] |
|---|---|---|---|
| PFUF 41 | 533738 | | 25 |

See push-through connector PFCN for loads.

# Brackets PFUF D

Connectors PFUF 2D, 3D and 4D for multi-sided constructions





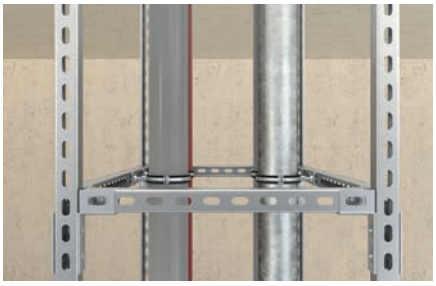

Frame constructions



Frame constructions

## Applications

- Connecting elements for multidimensional constructions with FUS channels connected by the push-through connector PFCN.
- For use in dry interior areas.

## Advantages

- The multidimensional PFUF construction elements enable multidimensional constructions in a very short time.
- The holes in the construction elements make them compatible with the push-through connector PFCN.
- The different shapes of the construction elements generate a high flexibility for channel constructions.
- Simple creation of channel constructions in connection with FUS channels and PFCN 41.
- Quick assembly by 90° rotation of the push-through connector PFCN 41 in the channel.

## Properties

- Material: steel DD11 (material no. 1.0332) acc. to DIN EN 10111
- Zinc plating: electro zinc-plated

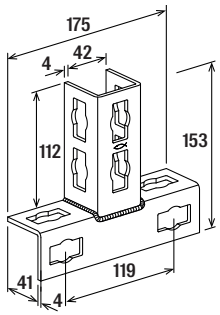


PFUF 2D

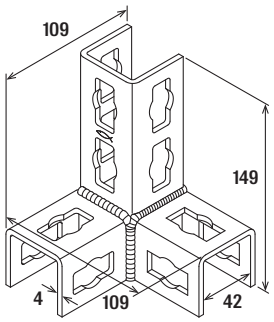


PFUF 3DL

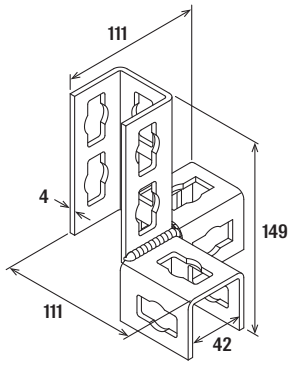


PFUF 3DR

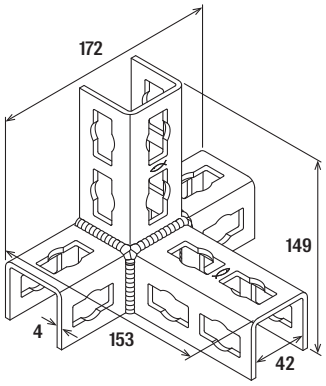


PFUF 4D

## Technical data

| Item | Item no. | | Sales unit [pcs] |
|---|---|---|---|
| **PFUF 2D** | **563148** | | 10 |
| **PFUF 3DL** | **535273** | | 10 |
| **PFUF 3DR** | **535274** | | 10 |
| **PFUF 4D** | **535275** | | 10 |

See push-through connector PFCN for loads.

# Channel nut FCN Clix P

Channel nut for quick and easy fixing in FUS profiles





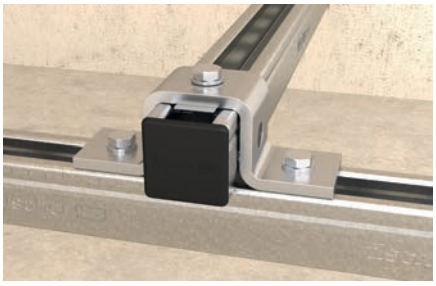

Cross connection

## Applications

- Connection of FUS channels and fixtures.
- For indoor and outdoor applications and environments with high stress to components due to corrosion.

## Certificates

R 120

R 30 MLAR

## Advantages

- The sliding nut design enables a quick and easy setting in the channel.
- The spring effect of the plastic clasp guarantees simple and precise positioning in the channel.
- The FCN Clix P's flat plastic mounting with wings offers a good hold and a convenient mounting.
- The serration on the sliding nut provides a secure hold in the FUS channel.
- Installation by rotating 90° enables post-installation in installed channel.

## Properties

- Material: steel S235JR (material no. 1.0037) acc. to DIN EN 10025, plastic Nylon PA6
- Zinc plating: electro zinc-plated

## Installation FCN Clix P

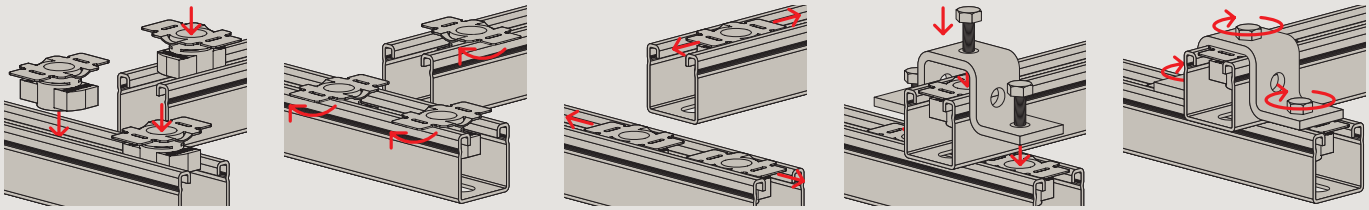

**See also:**

Product family Channel nut FCN Clix M
Page 156

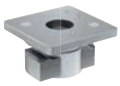

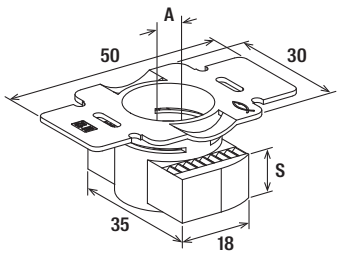


FCN Clix P



## Technical data

| Item | Item no. | Fire test report | Thread<br>A | Thickness<br>S<br>[mm] | Sales unit<br>[pcs] |
|---|---|---|---|---|---|
| **FCN Clix P 12** | **559760** | Yes | M12 | 9.5 | 50 |

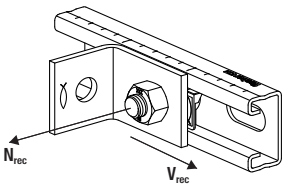


FCN Clix P

## Loads

| Item | Item no. | Max. recommended tension load for FUS 1,5 mm<br>$N_{rec}$<br>[kN] | Max. recommended tension load for FUS 2,0 mm<br>$N_{rec}$<br>[kN] | Max. recommended tension load for FUS 2,5 mm<br>$N_{rec}$<br>[kN] | Max. recommended shear load for FUS 2,0 mm<br>$V_{rec}$<br>[kN] | Max. recommended shear load for FUS 2,5 mm<br>$V_{rec}$<br>[kN] | Tightening torque for screw grade ≥ 8.8<br>$T_{inst}$<br>[Nm] | Sales unit<br>[pcs] |
|---|---|---|---|---|---|---|---|---|
| **FCN Clix P 12** | **559760** | 4.0 | 5.0 | 8.0 | 5.0 | 8.0 | 50 | 50 |

# Channel nut FCN Clix M

Channel nut for quick and easy fixing in FUS profiles





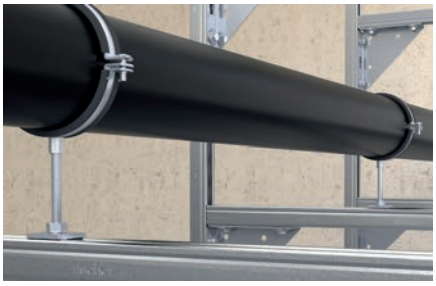

Connection on channel

## Applications

- Connection of pipe clamps to FUS channel under the use of threaded rods.
- For use in dry interior areas.

## Advantages

- The sliding nut design enables a quick and easy setting in the channel.
- The serration on the sliding nut provides a secure hold in the FUS channel.
- Installation by rotating 90° enables post-installation in installed channel.

## Properties

- Material: steel S235JR (material no. 1.0037) acc. to DIN EN 10025
- Material plastic: Nylon PA6
- Zinc plating: electro zinc-plated

## Certificates

R 120

R 30 MLAR

## Installation FCN Clix M

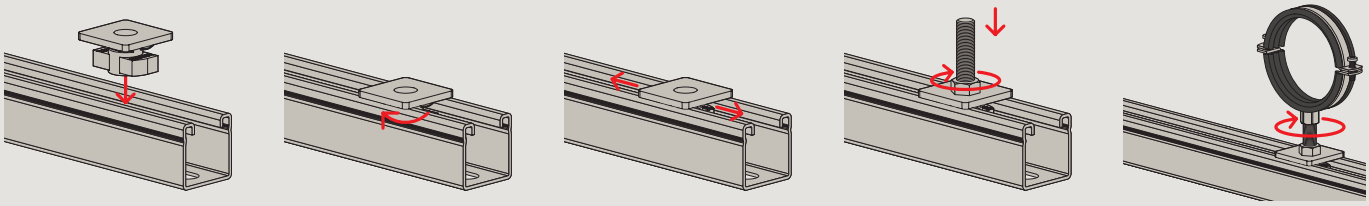

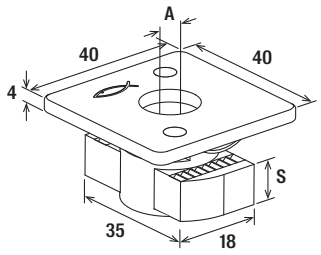


FCN Clix M



## Technical data

| Item | Item no. | Fire test report | Thread A | Thickness S [mm] | Sales unit [pcs] |
|---|---|---|---|---|---|
| FCN Clix M 6 | 559761 | No | M6 | 6.0 | 50 |
| FCN Clix M 8 | 559762 | No | M8 | 6.0 | 50 |
| FCN Clix M 10 | 559763 | Yes | M10 | 8.0 | 50 |
| FCN Clix M 12 | 559764 | Yes | M12 | 9.5 | 50 |

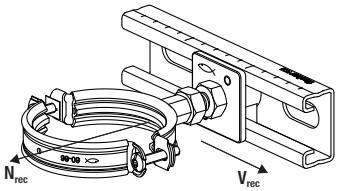


FCN Clix M

## Loads

| Item | Item no. | Max. recommended tension load for FUS 1,5 mm $N_{rec}$ [kN] | Max. recommended tension load for FUS 2,0 mm $N_{rec}$ [kN] | Max. recommended tension load for FUS 2,5 mm $N_{rec}$ [kN] | Tightening torque for screw grade ≥ 4.6 $T_{inst}$ [Nm] | Sales unit [pcs] |
|---|---|---|---|---|---|---|
| FCN Clix M 6 | 559761 | 2.5 | 3.0 | 3.0 | 5 | 50 |
| FCN Clix M 8 | 559762 | 3.0 | 4.0 | 4.0 | 10 | 50 |
| FCN Clix M 10 | 559763 | 4.0 | 5.0 | 8.0 | 15 | 50 |
| FCN Clix M 12 | 559764 | 4.0 | 5.0 | 8.0 | 20 | 50 |

# Channel nut FCN

Connector - Channel nut FCN







Lightweight installation on cantilever

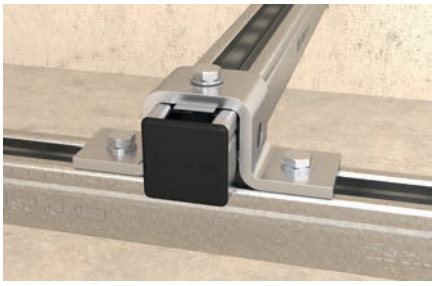

Cross connection

## Applications

- Simple hammer-head nut for installation in FUS channels
- The FCN is suitable for the connection of different fixtures and pipe clamps with the channel.
- For use in dry interior areas.

## Advantages

- The serration on the sliding nut provides a secure hold in the FUS channel.

## Properties

- Material: steel with min. tensile strength of 415 N/mm²
- Zinc plating: electro zinc-plated

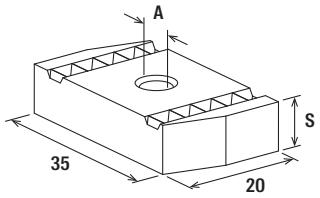


FCN

## Technical data

| | Item no. | Thread<br>A | Thickness<br>S<br>[mm] | Sales unit<br>[pcs] |
|---|---|---|---|---|
| **Item** | | | | |
| **FCN 12** | **077411** | M12 | 9.0 | 100 |

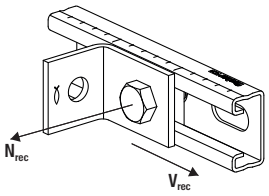


FCN

## Loads

| | Item no. | Max. recommended tension load for FUS 1,5 mm $N_{rec}$ [kN] | Max. recommended tension load for FUS 2,0 mm $N_{rec}$ [kN] | Max. recommended tension load for FUS 2,5 mm $N_{rec}$ [kN] | Max. recommended shear load for FUS 1,5 mm $V_{rec}$ [kN] | Max. recommended shear load for FUS 2,0/2,5 mm $V_{rec}$ [kN] | Tightening torque for screw grade ≥ 8.8 $T_{inst}$ [Nm] | Sales unit [pcs] |
|---|---|---|---|---|---|---|---|---|
| **Item** | | | | | | | | |
| **FCN 12** | **077411** | 4.0 | 5.0 | 8.0 | 2.0 | 2.5 | 50 | 100 |

# T-head bolt FCN Clix S

Hammer-head bolt for quick and easy fixing of pipe clamps in FUS profiles







Lightweight installation on cantilever

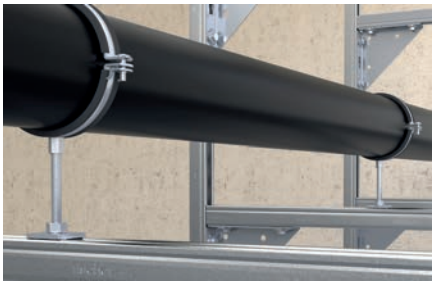

Connection on channel

## Applications

- For the quick connection of pipe clamps with FUS channels.
- For use in dry interior areas.

## Advantages

- The design of the FCN Clix S fits to the FUS channel profile and allows for a quick and easy installation.
- The spring effect of the FCN Clix S guarantees simple and precise positioning in the channel.
- Installation by rotating 90° enables post-installation to installed channel.
- The serration on the T-head bolt provides a secure hold in FUS channels.
- The pre-mounted threaded stud allows for direct mounting of the pipe clamps to the channel without additional material.

## Properties

- Washer: S235JR (material no. 1.0038)
- Threaded stud: DIN 976 steel 4.8
- Hexagonal nut: resistance class 8
- Plastic cage: Polyamide PA 6
- Zinc plating: electro zinc-plated

## Installation FCN Clix S

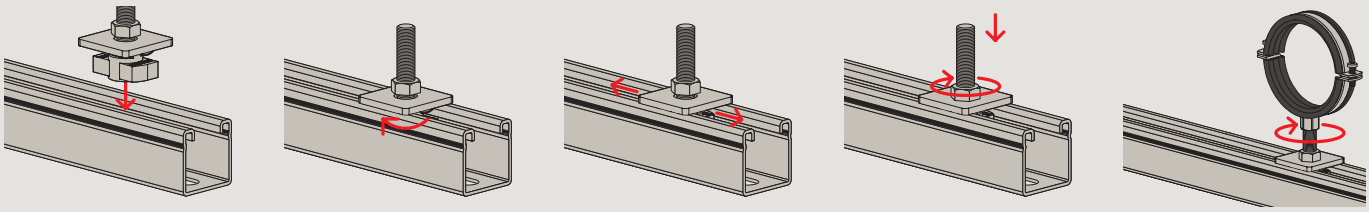

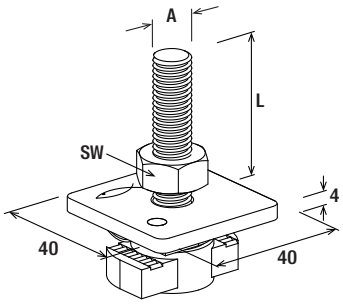


FCN Clix S



## Technical data

| Item | Item no. | Thread<br>A | Length<br>L<br>[mm] | Width across nut<br>SW<br>[mm] | Sales unit<br>[pcs] |
|---|---|---|---|---|---|
| FCN Clix S 8x30 | 567462 | M8 | 30 | 13 | 50 |
| FCN Clix S 8x40 | 567463 | M8 | 40 | 13 | 50 |
| FCN Clix S 8x60 | 567464 | M8 | 60 | 13 | 50 |
| FCN Clix S 8x80 | 567465 | M8 | 80 | 13 | 50 |
| FCN Clix S 8x100 | 567466 | M8 | 100 | 13 | 50 |
| FCN Clix S 10x30 | 567467 | M10 | 30 | 17 | 50 |
| FCN Clix S 10x40 | 567468 | M10 | 40 | 17 | 50 |
| FCN Clix S 10x60 | 567469 | M10 | 60 | 17 | 50 |
| FCN Clix S 10x100 | 567470 | M10 | 100 | 17 | 50 |
| FCN Clix S 12x40 | 567471 | M12 | 40 | 19 | 50 |
| FCN Clix S 12x60 | 567472 | M12 | 60 | 19 | 50 |

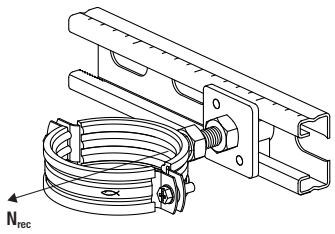


FCN Clix S

## Loads

| Item | Item no. | Max. recommended tension load for FUS 1,5 mm<br>$N_{rec}$<br>[kN] | Max. recommended tension load for FUS 2,0 mm<br>$N_{rec}$<br>[kN] | Max. recommended tension load for FUS 2,5 mm<br>$N_{rec}$<br>[kN] | Installation torque<br>$T_{inst}$<br>[Nm] | Sales unit<br>[pcs] |
|---|---|---|---|---|---|---|
| FCN Clix S 8x30 | 567462 | 3.0 | 4.0 | 4.0 | 10 | 50 |
| FCN Clix S 8x40 | 567463 | 3.0 | 4.0 | 4.0 | 10 | 50 |
| FCN Clix S 8x60 | 567464 | 3.0 | 4.0 | 4.0 | 10 | 50 |
| FCN Clix S 8x80 | 567465 | 3.0 | 4.0 | 4.0 | 10 | 50 |
| FCN Clix S 8x100 | 567466 | 3.0 | 4.0 | 4.0 | 10 | 50 |
| FCN Clix S 10x30 | 567467 | 4.0 | 5.0 | 8.0 | 15 | 50 |
| FCN Clix S 10x40 | 567468 | 4.0 | 5.0 | 8.0 | 15 | 50 |
| FCN Clix S 10x60 | 567469 | 4.0 | 5.0 | 8.0 | 15 | 50 |
| FCN Clix S 10x100 | 567470 | 4.0 | 5.0 | 8.0 | 15 | 50 |
| FCN Clix S 12x40 | 567471 | 4.0 | 5.0 | 8.0 | 20 | 50 |
| FCN Clix S 12x60 | 567472 | 4.0 | 5.0 | 8.0 | 20 | 50 |

# T-head bolt FCSN

Hammer-head bolt for easy fixing in FUS profiles







Lightweight installation on cantilever

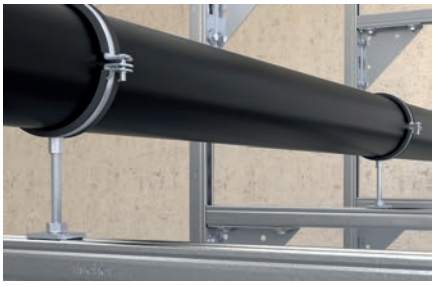

Connection on channel

## Applications

- Connection of pipe clamps to the channel.
- For use in dry interior areas.

## Advantages

- The hammer-head nut design for an easy setting in the channel.
- Installation by rotating 90° enables post-installation in installed channel.

## Properties

- Material washer: steel acc. to DIN EN 10139
- Hammer head bolt: steel with min. 400 N/mm²
- Material nut: strength category 4
- Zinc plating: electro zinc-plated

## Installation FCSN

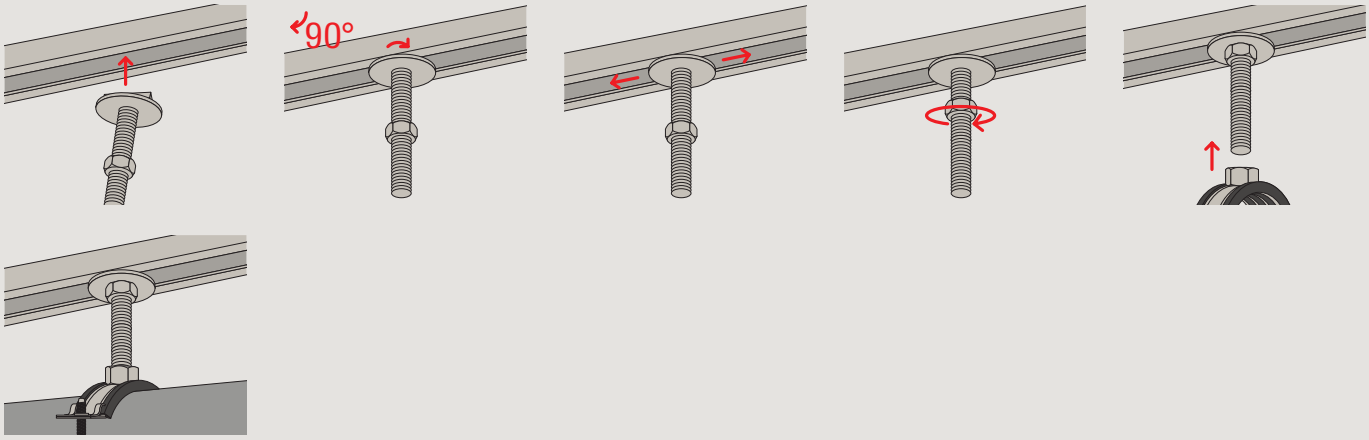

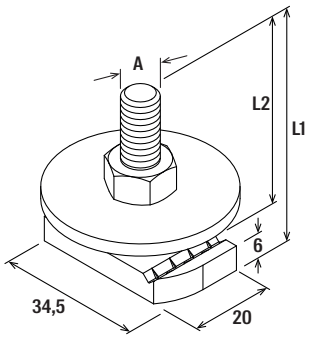


FCSN



## Technical data

| Item | Item no. | Thread A | Length L1 [mm] | Length L2 [mm] | Sales unit [pcs] |
|---|---|---|---|---|---|
| FCSN M 8 x 30 | 092960 | M8 | 36 | 30 | 50 |
| FCSN M 8 x 40 | 092961 | M8 | 46 | 40 | 50 |
| FCSN M 8 x 50 | 093354 | M8 | 56 | 50 | 50 |
| FCSN M 8 x 60 | 093355 | M8 | 66 | 60 | 50 |
| FCSN M 10 x 30 | 093360 | M10 | 38 | 30 | 50 |
| FCSN M 10 x 40 | 093361 | M10 | 48 | 40 | 50 |
| FCSN M 10 x 50 | 093362 | M10 | 58 | 50 | 50 |
| FCSN M 10 x 60 | 093363 | M10 | 68 | 60 | 50 |
| FCSN M 12 x 30 | 093366 | M12 | 39 | 30 | 50 |
| FCSN M 12 x 40 | 093367 | M12 | 49 | 40 | 50 |

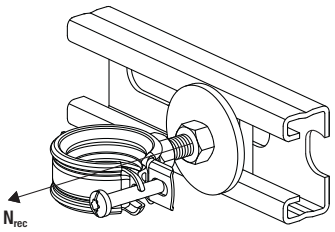


FCSN

## Loads

| Item | Item no. | Max. recommended tension load for FUS 1,5 mm $N_{rec}$ [kN] | Max. recommended tension load for FUS 2,0 mm $N_{rec}$ [kN] | Max. recommended tension load for FUS 2,5 mm $N_{rec}$ [kN] | Sales unit [pcs] |
|---|---|---|---|---|---|
| FCSN M 8 x 30 | 092960 | 3.0 | 4.0 | 4.0 | 50 |
| FCSN M 8 x 40 | 092961 | 3.0 | 4.0 | 4.0 | 50 |
| FCSN M 8 x 50 | 093354 | 3.0 | 4.0 | 4.0 | 50 |
| FCSN M 8 x 60 | 093355 | 3.0 | 4.0 | 4.0 | 50 |
| FCSN M 10 x 30 | 093360 | 4.0 | 4.0 | 5.0 | 50 |
| FCSN M 10 x 40 | 093361 | 4.0 | 4.0 | 5.0 | 50 |
| FCSN M 10 x 50 | 093362 | 4.0 | 4.0 | 5.0 | 50 |
| FCSN M 10 x 60 | 093363 | 4.0 | 4.0 | 5.0 | 50 |
| FCSN M 12 x 30 | 093366 | 4.0 | 4.0 | 5.0 | 50 |
| FCSN M 12 x 40 | 093367 | 4.0 | 4.0 | 5.0 | 50 |

# Channel washer HK 41

Connector - Channel washer HK



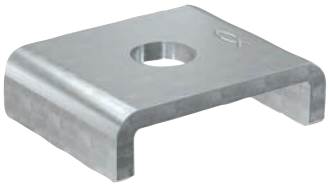



Lateral pipe mounting at channel



Channel installation at ceiling

## Applications

- The channel washer HK is used for stable connections and to strengthen the FUS profile for a fixing to the substrate.
- For use in dry interior areas.

## Advantages

- Perfect connection with the FUS channel thanks to laterally curved contours.
- The shape of the channel washer makes the push-through installations of channel profiles quick and easy.
- Fire resistance classification R120 & German model pipeline system guideline MLAR R30.

## Properties

- Material: steel S235JR (material no. 1.0037) acc. to DIN EN 10025
- Zinc plating: electro zinc-plated

## Certificates / Features

R 120

R 30 MLAR

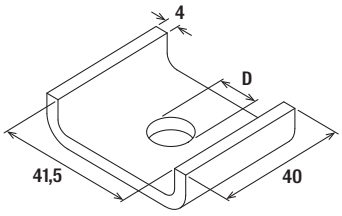


HK 41

## Technical data

| Item | Item no. | Approval ETA | Fire test report | Hole-ø D [mm] | Sales unit [pcs] |
|---|---|---|---|---|---|
| HK 41 8.5 | 547492 | – | – | 8.5 | 50 |
| HK 41 10.5 | 547493 | ● | Yes | 10.5 | 50 |
| HK 41 12.5 | 547494 | ● | Yes | 12.5 | 50 |
| HK 41 17 | 561253 | – | – | 17 | 50 |

# Saddle flange SF

Construction element - Saddle flange SF







Pipe installation in escape route



Cantilever with saddle flange

## Applications

- For solid connections between the massive profile and building structures.
- For use in dry interior areas.

## Certificates

R 120

R 30 MLAR

## Advantages

- The perfect-fit saddle of the SF enables a simple installation by inserting the channel.
- The saddle flange‘s stable design offers a secure hold for a load-bearing construction.
- Fire resistance classification R120 & German model pipeline system guideline MLAR R30.

## Properties

- Material base plate: steel DC01 (material no.1.0330) acc. to DIN EN 10139
- Zinc plating base plate: electro zinc-plated
- Material U-Profile: steel S235JR (material no. 1.0037) acc. to DIN EN 10025
- Zinc plating U-Profile: electro zinc-plated

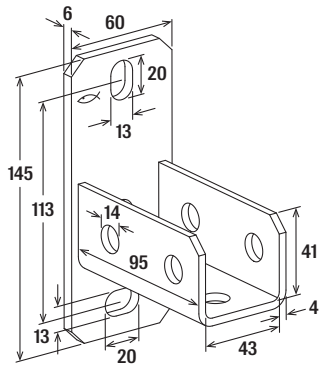


SF L 41

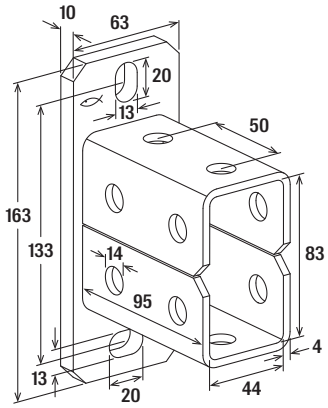


SF L 82

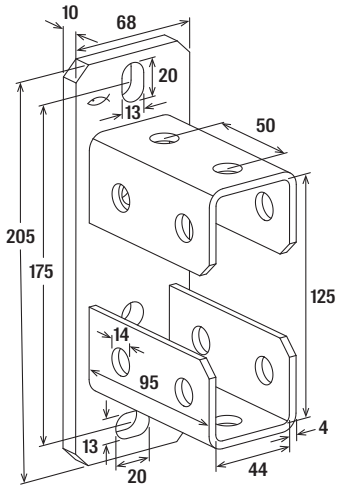


SF L 124

## Technical data

| Item | Item no. | Fire test report | For profile | Sales unit [pcs] |
|---|---|---|---|---|
| **SF L 41** | **504355** | Yes | 21, 41, 21D, 62 | 10 |
| **SF L 82** | **504357** | – | 41 | 5 |
| **SF L 124** | **504358** | – | 62 | 5 |

See channel nut FCN Clix P for loads.

# Mounting bracket UWS

Construction element - Universal bracket UWS





3D-frame constructions



## Applications

- Universal angle bracket for the reinforcement of supporting structures.
- For use in dry interior areas.

## Advantages

- The universal bracket for the connection of fischer channels gives a supporting structure, great stability and safety (we recommend using in pairs).

## Properties

- Material: steel S235JR (material no. 1.0037) acc. to DIN EN 10025
- Zinc plating: electro zinc-plated

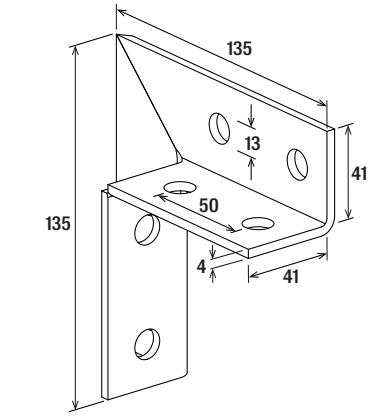


UWS

## Technical data

| | Item no. | | Sales unit [pcs] |
|---|---|---|---|
| **Item** | | | |
| **UWS** | **049479** | | 10 |

See channel nut FCN Clix P for loads.

# Angle bracket WK

Construction element - Angle bracket WK



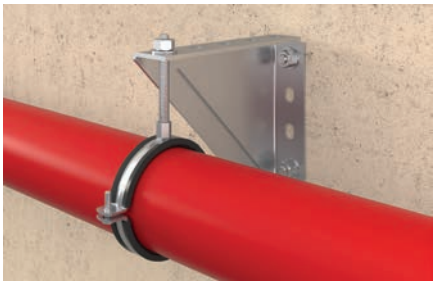

Heavy drainage pipe under angle bracket



Solid frame construction

## Applications

- Stable angle bracket for stiffening FUS channel constructions and for fixing pipelines.
- For use in dry interior areas.

## Advantages

- The design of the angle bracket allows for the fixing of pipe clamps or channels.
- The stable angle ensures a very high level of stability and safety to the structure.

## Properties

- Material: steel DD11 (material no. 1.0332) acc. to DIN EN 10111
- Zinc plating: electro zinc-plated

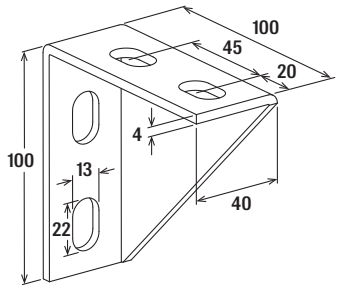


WK 100/100

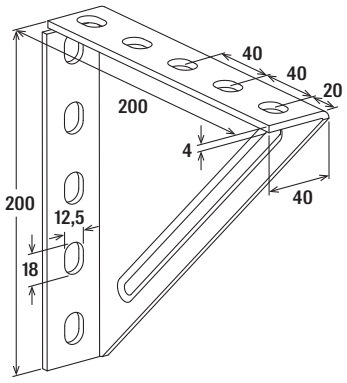


WK 200/200

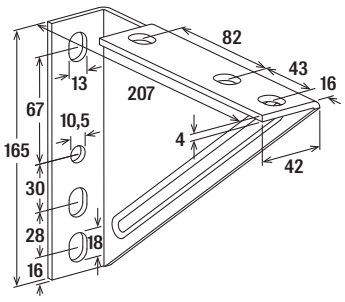


WK 207/165

## Technical data

| Item | Item no. | | Sales unit [pcs] |
|---|---|---|---|
| WK 100/100 | 063559 | | 5 |
| WK 200/200 | 079570 | | 5 |
| WK 207/165 | 079571 | | 6 |

## Load case 1

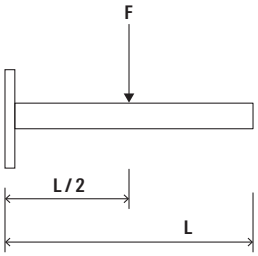


## Load case 2

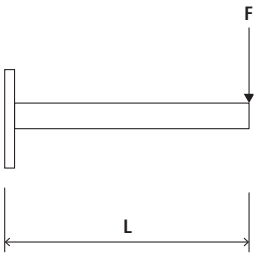


## Loads

| Item | Item no. | Max. recommended static load load case 1 $F_{rec}$ [kN] | Max. recommended static load load case 2 $F_{rec}$ [kN] | Sales unit [pcs] |
|---|---|---|---|---|
| **WK 100/100** | **063559** | – | 4.00 | 5 |
| **WK 200/200** | **079570** | 4.00 | 1.80 | 5 |
| **WK 207/165** | **079571** | – | 1.80 | 6 |

# Bracket FFF

Construction elements - Brackets FFF



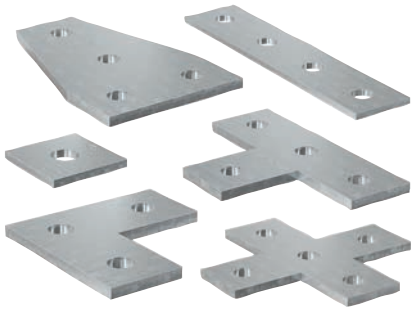



Waste water pipe

## Applications

- Connecting elements for the joining or strengthening of simple channel constructions.
- For use in dry interior areas.

## Advantages

- The various shapes of the connectors offer flexibility when it comes to the installation of channel constructions.
- The holes in the connectors guarantee a system fit with the FCN Clix P.

## Properties

- Material: steel S235JR (material no. 1.0037) acc. to DIN EN 10025
- Zinc plating: electro zinc-plated

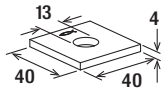


FFF 1

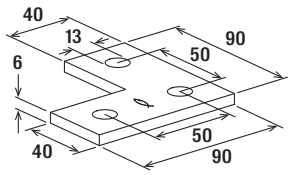


FFF 3L

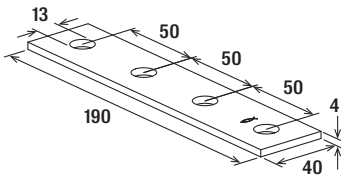


FFF 4

## Technical data

| Item | Item no. | | Sales unit [pcs] |
|---|---|---|---|
| FFF 1 | 547500 | | 25 |
| FFF 3L | 504498 | | 25 |
| FFF 4 | 547501 | | 25 |

See channel nut FCN Clix P for loads.

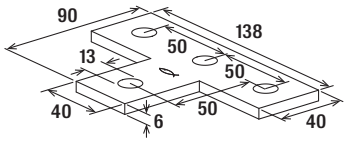


FFF 4T

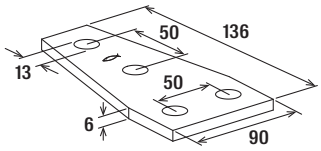


FFF 4D

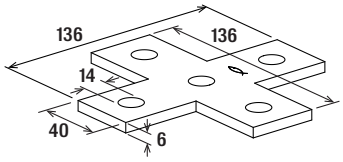


FFF 5C

## Technical data

| | Item no. | | Sales unit [pcs] |
|---|---|---|---|
| **Item** | | | |
| **FFF 4T** | **504500** | | 25 |
| **FFF 4D** | **504368** | | 25 |
| **FFF 5C** | **553073** | | 20 |

See channel nut FCN Clix P for loads.

# Bracket FAF

Construction elements - Mounting brackets FAF





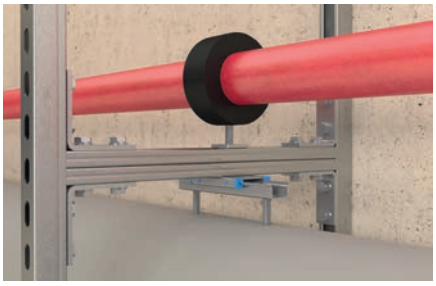

Frame constructions

## Applications

- Connecting elements for the joining or strengthening of simple channel constructions.
- For use in dry interior areas.

## Advantages

- The various shapes of the connectors offer flexibility when it comes to the installation of channel constructions.
- The holes in the connectors guarantee a system fit with the FCN Clix P.

## Properties

- Material: steel S235JR (material no. 1.0037) acc. to DIN EN 10025
- Zinc plating: electro zinc-plated

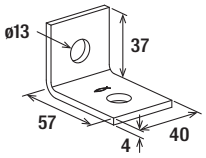


FAF 2

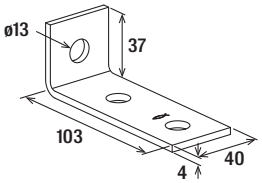


FAF 3

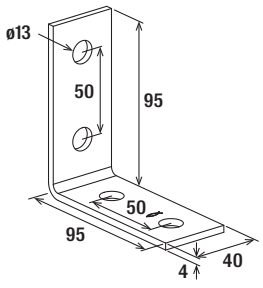


FAF 4

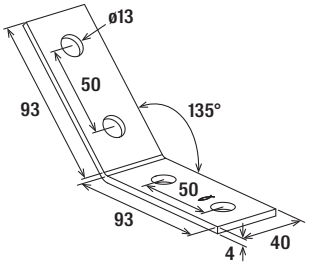


FAF 4/135°

## Technical data

| Item | Item no. | | Sales unit [pcs] |
|---|---|---|---|
| **FAF 2** | **547502** | | 25 |
| **FAF 3** | **547503** | | 25 |
| **FAF 4** | **547504** | | 25 |
| **FAF 4/135°** | **547505** | | 25 |

See channel nut FCN Clix P for loads.

# Flange FZF, FUF

Construction elements - Mounting brackets FZF, FUF



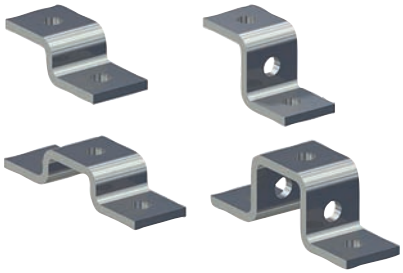

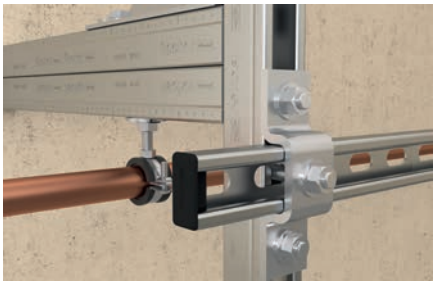

Cross connection on channel

## Applications

- Connecting elements for multi-dimensional channel constructions.
- For use in dry interior areas.

## Advantages

- The various shapes of the connecting elements offer flexibility during the installation of channel constructions.
- The holes in the connecting elements make them compatible with the FCN Clix P.

## Properties

- Material: steel S235JR (material no. 1.0037) acc. to DIN EN 10025
- Zinc plating: electro zinc-plated

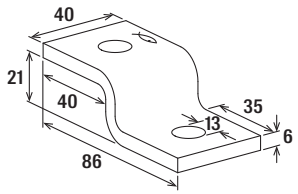


FZF 21

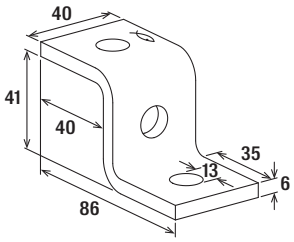


FZF 41

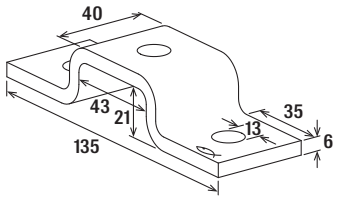


FUF 21

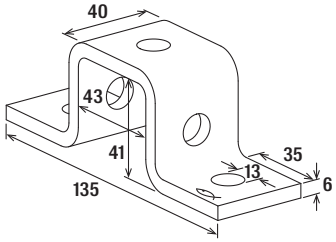


FUF 41

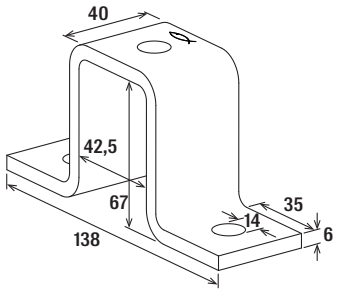


FUF 62

## Technical data

| Item | Item no. | | Sales unit [pcs] |
|---|---|---|---|
| **FZF 21** | **504375** | | 25 |
| **FZF 41** | **504515** | | 25 |
| **FUF 21** | **504376** | | 25 |
| **FUF 41** | **504377** | | 25 |
| **FUF 62** | **553076** | | 15 |

See channel nut FCN Clix P for loads.

# Flange FUF

Construction elements - Mounting brackets FUF







3D-frame constructions

## Applications

- Connecting elements for multi-dimensional channel constructions.
- For use in dry interior areas.

## Advantages

- The various shapes of the connecting elements offer flexibility during the installation of channel constructions.
- The holes in the connecting elements make them compatible with the FCN Clix P.

## Properties

- Material: steel S235JR (material no. 1.0037) acc. to DIN EN 10025
- Zinc plating: electro zinc-plated

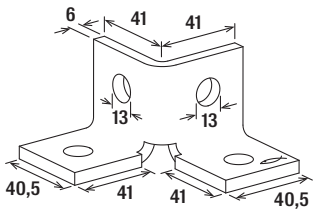


FUF 4Y

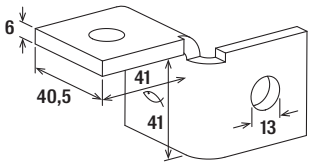


FUF 180°L

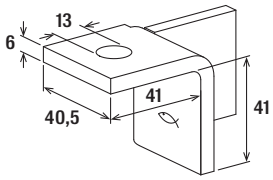


FUF 180°R

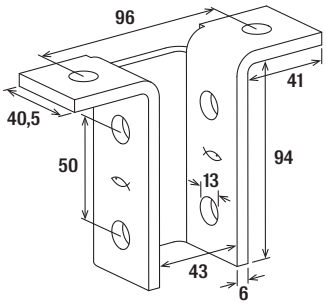


FUF 8T

## Technical data

| Item | Item no. | | Sales unit [pcs] |
|---|---|---|---|
| **FUF 4Y** | **504378** | | 20 |
| **FUF 180°L** | **504379** | | 20 |
| **FUF 180°R** | **504383** | | 20 |
| **FUF 8T** | **504387** | | 10 |

See channel nut FCN Clix P for loads.

# Variable bracket VB

Construction element - Variable bracket VB







Massive bracing of cantilever arm

## Applications

- Variable bracket to build up and strengthen supporting structures of FUS channel constructions with an angle from 0° to 180°.
- For use in dry interior areas.

## Advantages

- The design of the variable bracket VB enables the fixation of mounting channels at an angle of 0° to 180°.
- Due to the holes on all three sides, the channels can be installed with the slot lateral.
- The punched holes in the base plate allow the direct fixing to the substructure or onto a mounting channel.

## Properties

- Material: steel S235JR (material no. 1.0037) acc. to DIN EN 10025
- Zinc plating: electro zinc-plated

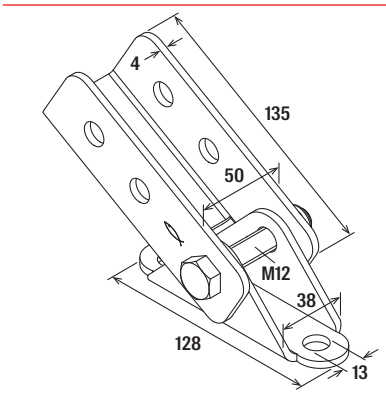


VB

## Technical data

| Item | Item no. | | Sales unit [pcs] |
|---|---|---|---|
| VB | 545650 | | 5 |

See channel nut FCN Clix P for loads.

# Bracing element FYJB

Variable bracing element FYJB for bracing and suspending installation grids made of FUS channel profiles

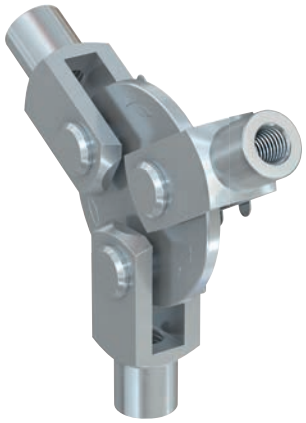



Installation grid with FYJB

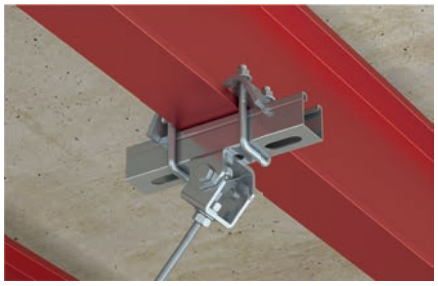

Connection to steal beam



## Applications

- Variable bracing element for bracing installation grids made of FUS channel profiles to the steel structure.
- For use with M12 threaded rods.
- For use in dry interior areas.

## Advantages

- The design of the FYJB bracing element allows bracing at any angle using ordinary threaded rods.
- In conjunction with the SPS turnbuckle, the FYJB bracing element enables height adjustment and thus an easy way to align FUS channel systems, especially installation grids, horizontally.
- High stability thanks to robust construction to accommodate high loads.
- Optimal addition to our cross connectors FVS for setting up an installation grid in production halls, warehouses or comparable buildings.

## Properties

- Material round plate and bolt: steel S235JR (material no. 1.0038)
- Material clevises: steel 11SMnPb30+C (material no. 1.0718)
- Material pin lock: spring steel
- Zinc plating: electro zinc-plated

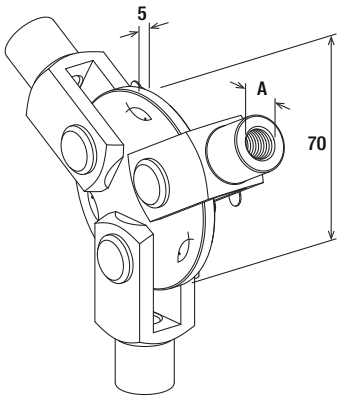


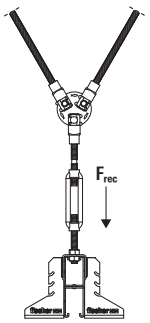


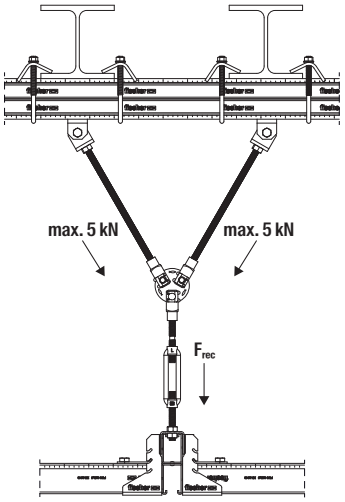


FYJB

## Technical data

| | Item no. | Thread<br>A | Max. recom. load FYJB<br>$F_{rec}$<br>[kN] | Max. recom. load FYJB with FUH13, TKR 82, and FUS 62 profile<br>$F_{rec}$<br>[kN] | Sales unit<br>[pcs] |
|---|---|---|---|---|---|
| **Item** | | | | | |
| **FYJB M12** | **569185** | M12 | 13 | 10 | 10 |

# Universal hinge FUH

Construction elements - Universal hinge FUH





Inclined bracing for installation grid



## Applications

- Variable construction element for bracing with threaded rods or to fix pipelines to sloped substructures.
- Can be attached directly to the underground or to FUS channels.
- Flexible use especially for sloped substructures or undergrounds.
- For use in dry interior areas.

## Advantages

- Flexible solution for many applications such as fixing of pipelines to sloped undergrounds or bracing with threaded rods.
- Free adjustable angle from 0° up to 180°.
- Easy to use.

## Properties

- Material: steel S235JR (material no. 1.0037)
- Zinc plating: electro zinc-plated

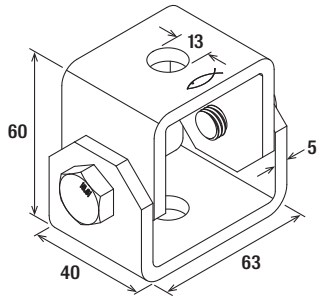


FUH

## Technical data

| Item | Item no. | | Sales unit [pcs] |
|---|---|---|---|
| FUH 13 | 543065 | | 6 |

## Loads

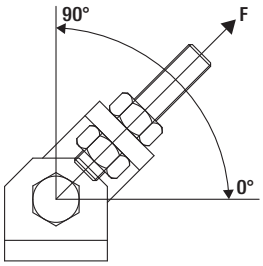




| Angle | 90° | 75° | 60° | 45° | 30° | 0° |
|---|---|---|---|---|---|---|
| Maximum recommendet load [kN] | 6 | 5,5 | 5 | 4 | 3 | 2,5 |

Intermediate values can be interpolated.

# Threaded rod bracket FSB 45°

Construction element - Threaded rod bracket FSB 45°







Heavy pipe on cantilever



Bracing for fixed point

## Applications

- For easy creation of bracing and stiffening using threaded rods and nuts.
- For use in dry interior areas.

## Advantages

- The anchoring element's socket allows the fast insertion of a pre-mounted M10 threaded rod with nut.
- The hole in the base plate enables the direct fixing onto a wall or ceiling or onto a channel.

## Properties

- Material: steel DD11 (material no. 1.0332) acc. to DIN EN 10111
- Zinc plating: electro zinc-plated

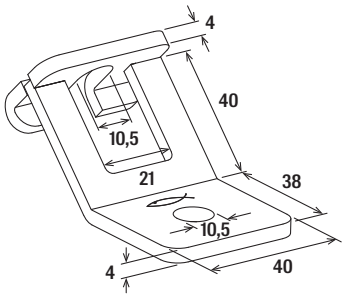


FSB 45°

## Technical data

| | Item no. | | Sales unit [pcs] |
|---|---|---|---|
| Item | | | |
| FSB 45° | 071269 | | 20 |

## Loads

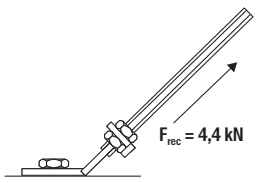

# Beam clamp TKR

Beam clamp for fixing of profiles to steel girders







Channel to steelbeam

## Applications

- Fixing to steel girders requires two clamps per connection.
- For use in dry interior areas.

## Advantages

- The design of the beam clamp allows fixing without drilling or welding.
- The various lengths of the beam clamp enable the fixing on most standard beams.
- The shape of the beam clamp allows the simple adjustment of the channel connection.

## Properties

- Material plate/U-bolt pipe hanger: steel S235JR (material no. 1.0037) acc. to DIN EN 10025
- Material hexagon nut: steel resistance class 8
- Zinc plating: electro zinc-plated

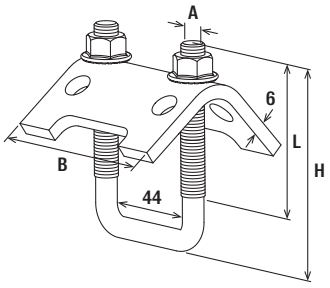


TKR

## Technical data

| Item | Item no. | For profile | Thread A | Width B [mm] | Height H [mm] | Length L [mm] | Sales unit [pcs] |
|---|---|---|---|---|---|---|---|
| **TKR 21 - 42** | **504363** | 21, 41 | M8 | 79 | 97 | 50 | 20 |
| **TKR 82** | **504366** | 62, 41D | M10 | 79 | 137 | 80 | 20 |
| **TKR 124** | **504367** | 62 | M10 | 79 | 179 | 80 | 10 |

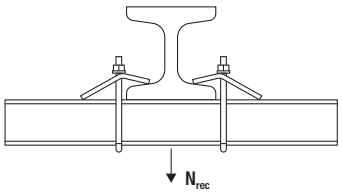


TKR

## Loads

| Item | Item no. | Max. recom. static load (centr. tension) $N_{rec}$ [kN] | Tightening torque $T_{inst}$ [Nm] | Max. clamping range girders [mm] | Sales unit [pcs] |
|---|---|---|---|---|---|
| **TKR 21 - 42** | **504363** | 5.00 | 15 | 25 | 20 |
| **TKR 82** | **504366** | 10.00 | 20 | 25 | 20 |
| **TKR 124** | **504367** | 10.00 | 20 | 25 | 10 |

# Beam clamp FHBC hdg

Beam clamp FHBC - Beam clamp for the installation of FUS channels on steel girders







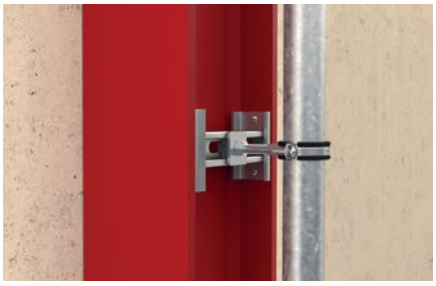

Pipe installation on steel girders

## Applications

- For installing FUS profile channels between the flanges on steel girders and U-profiles.
- Suitable for FUS channels FUS 41.
- For indoor and outdoor application.

## Advantages

- Easy installation of FUS profile to the flanges of steel girders.
- The FHBC allows for the installation of FUS channels on steel girders without drilling.

## Properties

- Material: steel S235JR (material no. 1.0037) acc. to DIN EN 10025 (74074882)
- Zinc plating: hot-dip galvanised

## Installation FHBC

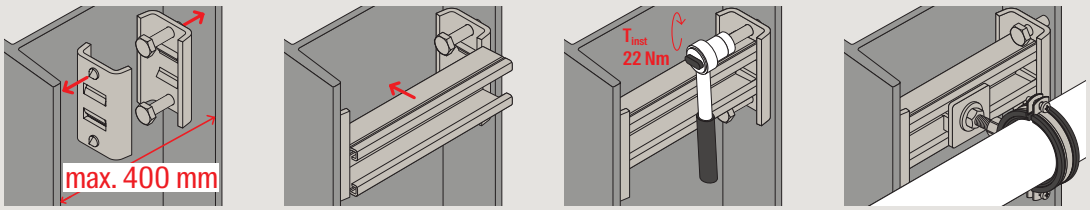

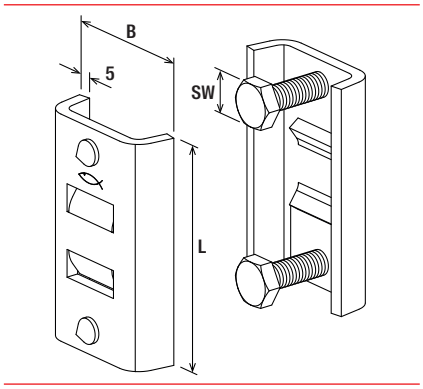


FHBC

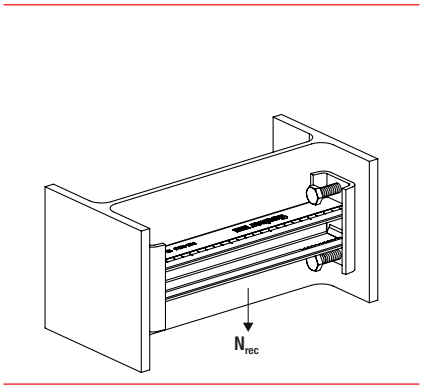


FHBC

## Technical data

| | Item no. | Width<br>B<br>[mm] | Length<br>L<br>[mm] | Width across nut<br>SW<br>[mm] | Max. recom. static load (centr. tension)<br>$N_{rec}$<br>[kN] | Installation torque<br>$T_{inst}$<br>[Nm] | Sales unit<br>[pcs] |
|---|---|---|---|---|---|---|---|
| **Item** | | | | | | | |
| **FHBC hdg** | **557375** | 55 | 90 | 17 | 3.60 | 22 | 10 |



# 5
# Installation grid




| | | |
|---|---|---|
| Cross connector FVS II | 190 |  |
| Channel FUS | 191 |  |
| Channel connector FUF OC | 192 |  |
| Channel washer HK 41 | 192 |  |
| Cover cap FEC | 192 |  |
| Channel nut FCN Clix P | 193 |  |
| Channel nut FCN | 193 |  |
| Universal hinge FUH | 193 |  |
| Turnbuckle SPS, Bolt BLR | 194 |  |
| Beam clamp TKR | 194 |  |
| Threaded rod G | 194 |  |
| Hexagonal bolt SKS | 195 |  |
| Washer U | 195 |  |
| Hexagonal nut MU | 195 |  |
| Hexagonal connector VM | 196 |  |
| Bracing bracket FYJB | 196 |  |

# Cross connector FVS II

Cross connector for creation of flexible installation grids made of FUS channels



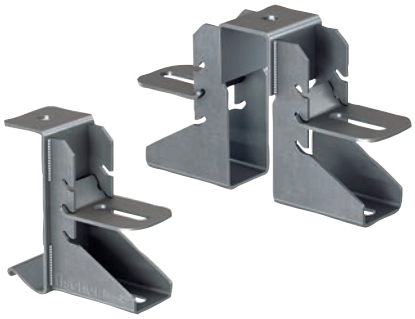



## Applications

- Cross connectors for creation of an installation grid by utilisation of FUS channels.
- For use in dry interior areas.

## Advantages

- The design of the cross connector allows for a simple and time-saving creation of an installation grid.
- Ceiling suspension in combination with threaded rods
- Suitable for FUS channels (longitudinal): FUS 62D
- Suitable for FUS channels (transversal): FUS 41, FUS 21D, FUS 62, FUS 41D

## Properties

- Material: steel S235JR (material no. 1.0037) acc. to DIN EN 10025
- Zinc plating: electro zinc-plated

## Installation FVS 3 with one channel

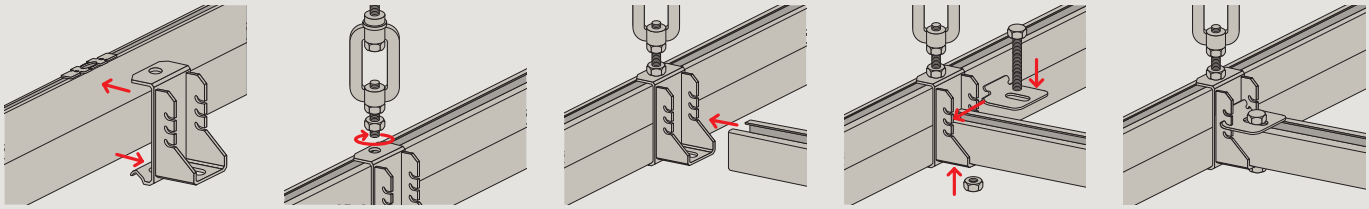

## Installation FVS 3 with double channel

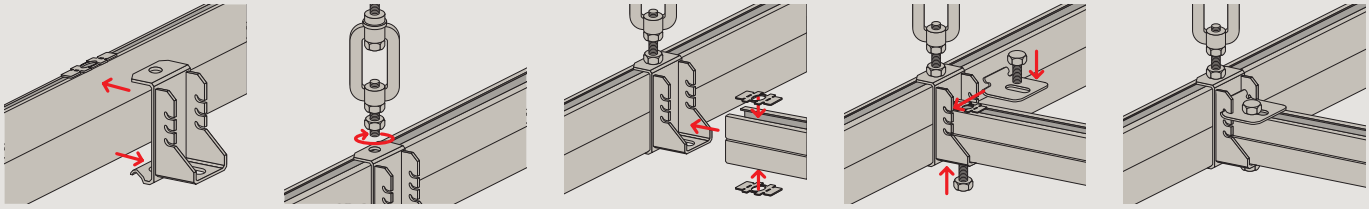

## Installation FVS 4

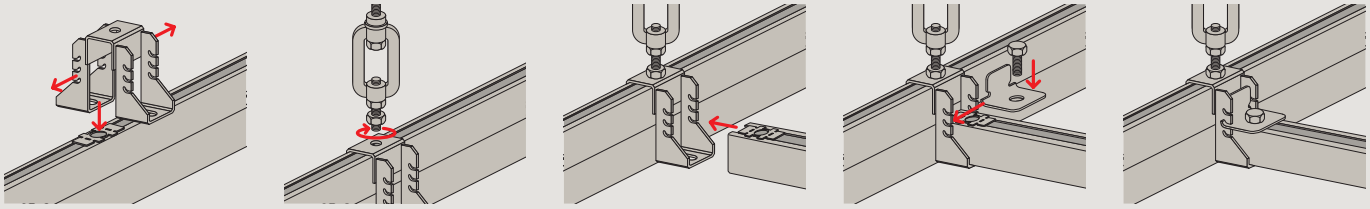



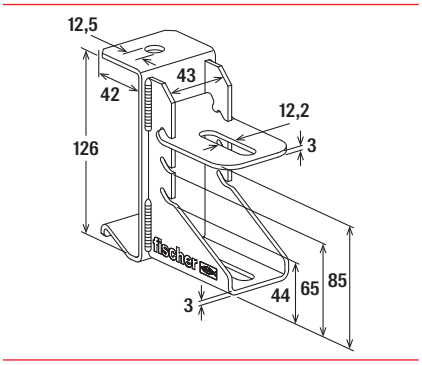


FSV 3 II

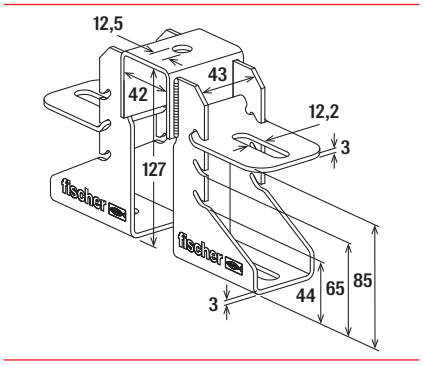


FVS 4 II

## Technical data

| Item | Item no. | For profile | Sales unit [pcs] |
|---|---|---|---|
| **FVS 3 II** | **543060** | FUS channel crosswise: FUS 41, FUS 21D, FUS 62, FUS 41D, FUS channel lengthwise: FUS 62D | 8 |
| **FVS 4 II** | **543063** | FUS channel crosswise: FUS 41, FUS 21D, FUS 62, FUS 41D, FUS channel lengthwise: FUS 62D | 5 |

## Channel FUS



FUS 41 FUS 41 D

| Item | Item no. | Approval ETA | Length L [mm] | Thickness S [mm] | Profile weight [kg/m] | Sales unit [pcs] |
|---|---|---|---|---|---|---|
| **FUS 41/2,0 - 3 m** | **097658** | ● | 3,000 | 2.0 | 2.06 | 1 |
| **FUS 41/2,0 - 6 m** | **097659** | ● | 6,000 | 2.0 | 2.06 | 1 |
| **FUS 41/2,5 - 3 m** | **077347** | ● | 3,000 | 2.5 | 2.45 | 1 |
| **FUS 41/2,5 - 6 m** | **077537** | ● | 6,000 | 2.5 | 2.45 | 1 |
| **FUS 62/2,5 - 6 m** | **504457** | ● | 6,000 | 2.5 | 3.27 | 1 |
| **FUS 21D/2,0 - 3 m** | **504458** | ● | 3,000 | 2.0 | 2.87 | 1 |
| **FUS 21D/2,0 - 6 m** | **535531** | ● | 6,000 | 2.0 | 2.87 | 1 |
| **FUS 41D/2,5 - 6 m** | **504459** | ● | 6,000 | 2.5 | 4.89 | 1 |
| **FUS 62D/2,5 - 6 m** | **504460** | ● | 6,000 | 2.5 | 6.55 | 1 |
| **FUS 41/2,0 - 2 m** | **040390** | ● | 2,000 | 2.0 | 2.06 | 1 |
| **FUS 41/2,5 - 2 m** | **092295** | ● | 2,000 | 2.5 | 2.45 | 1 |

See page 116 for article description

## Channel connector FUF OC



FUF OC 62

| Item | Item no. | Length L [mm] | Thickness S [mm] | Sales unit [pcs] |
|---|---|---|---|---|
| FUF OC 41 | 504517 | 200 | 4.0 | 20 |
| FUF OC 62 | 504518 | 400 | 4.0 | 10 |

See page 122 for article description

## Channel washer HK 41

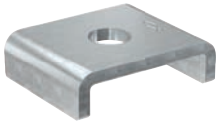

HK

| Item | Item no. | Approval ETA | | Sales unit [pcs] |
|---|---|---|---|---|
| HK 41 12.5 | 547494 | ● | | 50 |

See page 164 for article description

## Cover cap FEC



FEC 21 B



FEC 41 B



FEC 62 B

| Item | Item no. | Material | Sales unit [pcs] |
|---|---|---|---|
| FEC 21 B | 077357 | Polyethylene, black | 100 |
| FEC 41 B | 077355 | Polyethylene, black | 100 |
| FEC 62 B | 505551 | Polyethylene, black | 100 |

See page 133 for article description

## Channel nut FCN Clix P



FCN Clix P

| Item | Item no. | Thread A | Sales unit [pcs] |
|---|---|---|---|
| **FCN Clix P 12** | **559760** | M12 | 50 |

See page 154 for article description

## Channel nut FCN



FCN

| Item | Item no. | Thread A | Sales unit [pcs] |
|---|---|---|---|
| **FCN 12** | **077411** | M12 | 100 |

See page 158 for article description

## Universal hinge FUH



FUH

| Item | Item no. | | Sales unit [pcs] |
|---|---|---|---|
| **FUH 13** | **543065** | | 6 |

See page 181 for article description

## Turnbuckle SPS, Bolt BLR



SPS



BLR

| Item | Item no. | Thread A | Sales unit [pcs] |
|---|---|---|---|
| SPS M 12 | 064090 | M12 | 25 |
| BLR 100 M12 | 064091 | M12 | 25 |

See page 285 for article description

## Beam clamp TKR



TKR

| Item | Item no. | For profile | Sales unit [pcs] |
|---|---|---|---|
| TKR 21 - 42 | 504363 | 21, 41 | 20 |
| TKR 82 | 504366 | 62, 41D | 20 |
| TKR 124 | 504367 | 62 | 10 |

See page 184 for article description

## Threaded rod G



G

| Item | Item no. | Thread A | Length l [mm] | Sales unit [pcs] |
|---|---|---|---|---|
| G M12 x 1000 | 020957 | M12 | 1,000 | 20 |
| G M12 x 2000 | 579746 | M12 | 2,000 | 25 |
| G M12 x 3000 | 064056 | M12 | 3,000 | 5 |

See page 271 for article description

## Hexagonal bolt SKS

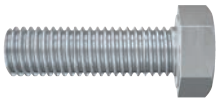

SKS zp

| Item | Item no. | Thread A | Length l [mm] | Width across nut SW [mm] | Sales unit [pcs] |
|---|---|---|---|---|---|
| **SKS M12 x 20** | **570680** | M12 | 20 | 19 | 100 |
| **SKS M12 x 25** | **535538** | M12 | 25 | 19 | 100 |
| **SKS M12 x 30** | **570681** | M12 | 30 | 19 | 100 |
| **SKS M12 x 35** | **570682** | M12 | 35 | 19 | 100 |
| **SKS M12 x 55** | **077611** | M12 | 55 | 19 | 100 |
| **SKS M12 x 65** | **535539** | M12 | 65 | 19 | 50 |
| **SKS M12 x 85** | **505553** | M12 | 85 | 19 | 100 |

See page 286 for article description

## Washer U



U

| Item | Item no. | Thickness S [mm] | Hole-Ø D [mm] | Sales unit [pcs] |
|---|---|---|---|---|
| **U 12 x 24** | **557301** | 2.5 | 12.5 | 100 |
| **U 12 x 40** | **024649** | 3.0 | 12.5 | 100 |

See page 288 for article description

## Hexagonal nut MU



MU

| Item | Item no. | Thread A | Width across nut SW [mm] | Sales unit [pcs] |
|---|---|---|---|---|
| **MU M12** | **024650** | M12 | 19 | 100 |

See page 289 for article description

## Hexagonal connector VM



VM

| Item | Item no. | Thread A | Sales unit [pcs] |
|---|---|---|---|
| **VM M 12** | **020971** | M12 | 100 |

See page 290 for article description

## Bracing bracket FYJB



FYJB

| Item | Item no. | Thread A | Sales unit [pcs] |
|---|---|---|---|
| **FYJB M12** | **569185** | M12 | 10 |

See page 179 for article description

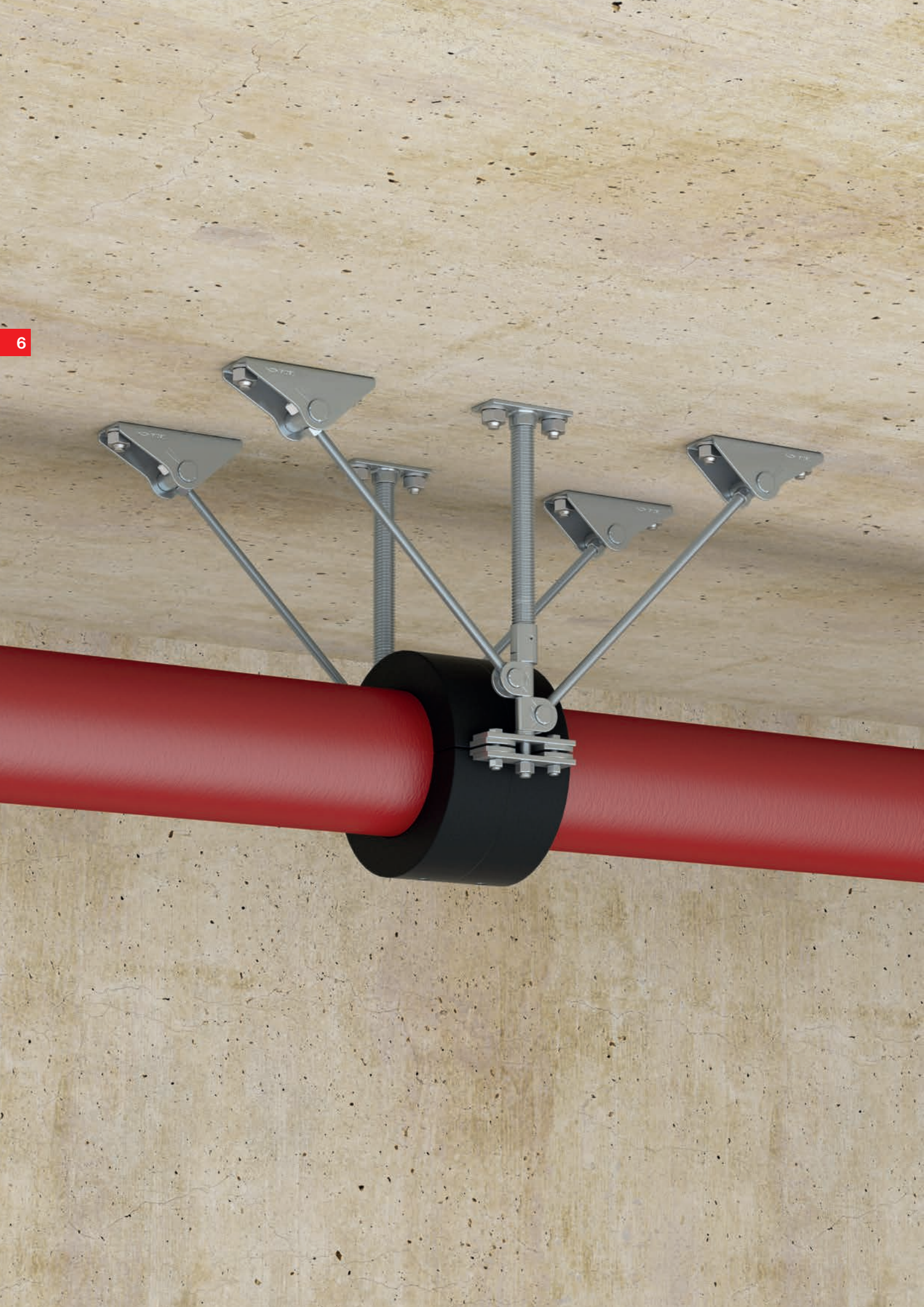

# 6

# Fixed point and sliding elements




| FIXED POINTS | | |
|---|---|---|
| Fixed point saddle FFS-M / FFS-M2 | 200 |  |
| Fixed point saddle FFS-H / FFS-H2 | 201 |  |
| Fixed point compact FFP-C | 202 |  |
| Fixed point light FFP-L / FFP-L2 | 203 |  |
| Fixed point light FFP-L22 / FFP-L42 | 204 |  |
| Fixed point medium FFP-M / FFP-M2 | 205 |  |
| Fixed point medium FFP-M22 / -M42 | 207 |  |
| Fixed point medium FFP-MD2 / -MD4 | 208 |  |
| Fixed point heavy FFP-HD22 / FFP-HD42 | 209 |  |
| Fixed point solid clamp FFPC | 211 |  |
| Refrigeration fixed point clamp FFRC | 213 |  |
| Sound insulated fixed point FSFP | 215 |  |

| SLIDING ELEMENTS | | |
|---|---|---|
| Axial slider compact FASC | 217 |  |
| Axial slider light FASL | 219 |  |
| Axial slider medium FASM | 221 |  |
| Axial roller slider heavy FASH | 223 |  |
| Cross slider FCSM | 225 |  |
| Sliding hanger SB | 227 |  |
| Pendulum hanger PDH / PDH K | 228 |  |

# Fixed point saddle FFS-H / FFS-H2

The fixed point solutions for medium loads



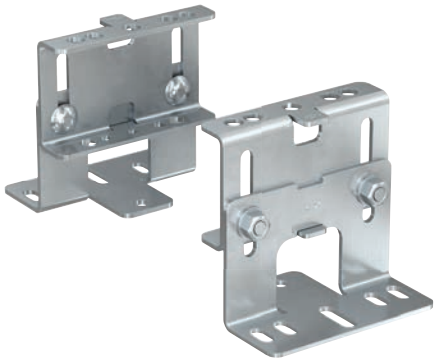



Hot water and circulation pipes



Media lines with thermal expansion

## Applications

- Heating pipes
- Cooling lines
- Steam pipes
- Hot water and circulation pipes
- Media lines with thermal expansion
- For use in dry interior areas.

## Advantages

- The massive design of the fixed point and the massive subsoil connection allow the absorption of high loads for a stable and secure connection.
- The fixed points consist of components with matching thread sizes and plug holes, thus ensuring easy assembly with the same tools.
- The height adjustment of the fixed point allows for precise adjustment to match mounted pipelines and therefore ensures the safe function of the fixed point.
- The fixed point is suitable for mounting the FFPC fixed point solid clamp and FFRC refrigeration fixed point clamp for even more flexibility.

## Properties

- Material: steel
- Bolts and nuts: strength class 8
- Zinc plating: electro zinc-plated
- Thermal capacity: -30 °C to +300 °C

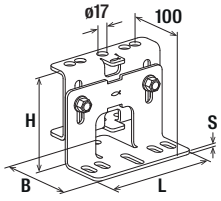


FFS-M

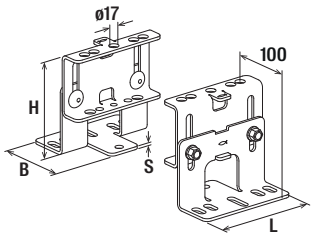


FFS-M2

## Technical data

| Item | Item no. | Max. recom. pipe-ø | Length L [mm] | Width B [mm] | Thickness S [mm] | Min. construction height H [mm] | Max. construction height H [mm] | Max. recom. axial load $F_{x\,rec.}$ [kN] | Installation torque $T_{inst}$ [Nm] | Sales unit [pcs] |
|---|---|---|---|---|---|---|---|---|---|---|
| **FFS-M** | **569306** | 168.3 | 180 | 130 | 5.0 | 120 | 180 | 9.0 | 80 | 2 |
| **FFS-M2** | **569307** | 168.3 | 180 | 130 | 5.0 | 120 | 180 | 23.0 | 80 | 1 |

Note: Maximum loads for orientation. Please contact fischer for the design of the fixed points. Load values for fixing with: 564586 Bolt anchor FAZ II Plus 12/10.
For detailed information on assembly, see the assembly instructions for download or as an enclosure to the article.

# Fixed point saddle FFS-H / FFS-H2

The fixed point solutions for heavy loads

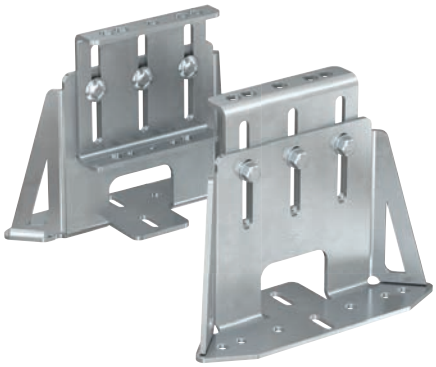



Hot water and circulation pipes



Media lines with thermal expansion



## Applications

- Heating pipes
- Cooling lines
- Steam pipes
- Hot water and circulation pipes
- Media lines with thermal expansion
- For use in dry interior areas.

## Advantages

- The massive design of the fixed point and the massive subsoil connection allow the absorption of high loads for a stable and secure connection.
- The fixed points consist of components with matching thread sizes and plug holes, thus ensuring easy assembly with the same tools.
- The height adjustment allows for precise adjustment to match mounted pipelines and therefore ensures the safe function of the fixed point.
- The fixed point is suitable for mounting the FFPC and FFRC for even more flexibility.

## Properties

- Material: steel
- Bolts and nuts: strength class 8
- Zinc plating: electro zinc-plated
- Thermal capacity: -30 °C to +300 °C

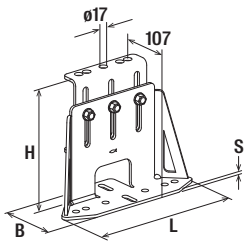


FFS-H

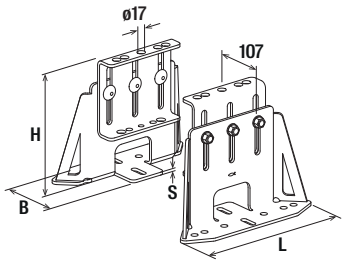


FFS-H2

## Technical data

| Item | Item no. | Max. recom. pipe-ø | Length L [mm] | Width B [mm] | Thickness S [mm] | Min. construction height H [mm] | Max. construction height H [mm] | Max. recom. axial load $F_{x\,rec.}$ [kN] | Installation torque $T_{inst}$ [Nm] | Sales unit [pcs] |
|---|---|---|---|---|---|---|---|---|---|---|
| FFS-H | 569308 | 355.6 | 325 | 130 | 6.0 | 210 | 310 | 14.0 | 80 | 2 |
| FFS-H2 | 569309 | 355.6 | 325 | 130 | 6.0 | 210 | 310 | 36.0 | 80 | 1 |

Note: Maximum loads for orientation. Please contact fischer for the design of the fixed points. Load values for fixing with: 564586 Bolt anchor FAZ II Plus 12/10.
For detailed information on assembly, see the assembly instructions for download or as an enclosure to the article.

# Fixed point compact FFP-C

The fixed point solutions for light loads



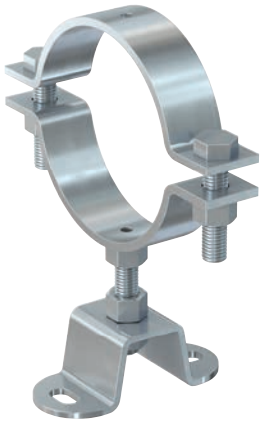



Media lines with thermal expansion

## Applications

- Heating pipes
- Cooling lines
- Hot water and circulation pipes
- Media lines with thermal expansion
- For use in dry interior areas.

## Advantages

- The compact design of the fixed point enables a small distance to the substrate and ensures safe transfer of the occurring forces into the substrate.
- The height adjustment on the base plate allows for precise adjustment to match mounted pipelines and therefore ensures the safe function of the fixed point.
- The fixed points consist of components with matching thread sizes and plug holes, thus ensuring easy assembly with the same tools.

## Properties

- Material: steel
- Bolts and nuts: strength class 8
- Zinc plating: electro zinc-plated
- Thermal capacity: -30 °C to +300 °C
- Note: Fixed point solid clamp FFPC and the threaded rod G16 (chapter „Accessories“ Art. no. 568434) are not included in the set.

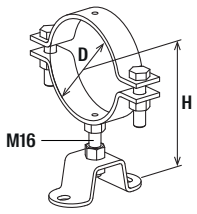


FFP-C

## Technical data

| Item | Item no. | Max. recom. pipe-ø D | Min. construction height H [mm] | Max. construction height H [mm] | Max. recom. axial load $F_{x\,rec.}$ [kN] | Sales unit [pcs] |
|---|---|---|---|---|---|---|
| **FFP-C** | **567696** | 60.3 | 100 | 150 | 5.0 | 1 |

Note: Maximum loads for orientation. Please contact fischer for the design of the fixed points. Load values for fixing with: 564586 Bolt anchor FAZ II Plus 12/10.
For detailed information on assembly, see the assembly instructions for download or as an enclosure to the article.

# Fixed point light FFP-L / FFP-L2

The fixed point solutions for light loads





Media lines with thermal expansion



## Applications

- Heating pipes
- Cooling lines
- Hot water and circulation pipes
- Media lines with thermal expansion
- For use in dry interior areas.

## Advantages

- The supports and braces on one or both sides of the variable fixed point allow adaptation to the distance of the pipeline to the subsoil.
- The fixed points consist of components with matching thread sizes and plug holes, thus ensuring easy assembly with the same tools.
- The height adjustment on the base plate allows for precise adjustment to match mounted pipelines and therefore ensures the safe function of the fixed point.

## Properties

- Material: steel
- Bolts and nuts: strength class 8
- Zinc plating: electro zinc-plated
- Thermal capacity: -30 °C to +300 °C
- Note: Fixed point solid clamp FFPC and threaded rod G16 (chapter „Accessories“ Art. no. 568434) are not included in the set.

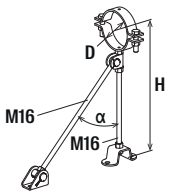


FFP-L

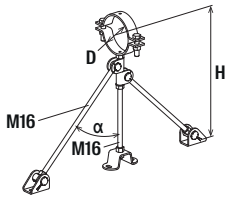


FFP-L2

## Technical data

| Item | Item no. | Max. recom. pipe-ø D | Min. construction height H [mm] | Max. construction height H [mm] | Bracing angle α [°] | Max. recom. axial load $F_{x\,rec.}$ [kN] | Sales unit [pcs] |
|---|---|---|---|---|---|---|---|
| **FFP-L** | **567697** | 139.7 | 270 | 500 | 35 - 45 | 3.0 | 1 |
| **FFP-L2** | **567698** | 139.7 | 320 | 500 | 35 - 45 | 7.0 | 1 |

Note: Maximum loads for orientation. Please contact fischer for the design of the fixed points. Load values for fixing with: 564586 Bolt anchor FAZ II Plus 12/10.
For detailed information on assembly, see the assembly instructions for download or as an enclosure to the article.

# Fixed point light FFP-L22 / FFP-L42

The fixed point solutions for light loads







Media lines with thermal expansion

## Applications

- Heating pipes
- Cooling lines
- Hot water and circulation pipes
- Media lines with thermal expansion
- For use in dry interior areas.

## Advantages

- The supports and braces on one or both sides of the variable fixed point allow adaptation to the distance of the pipeline to the subsoil.
- The fixed points consist of components with matching thread sizes and plug holes, thus ensuring easy assembly with the same tools.
- The height adjustment on the base plate allows for precise adjustment to match mounted pipelines and therefore ensures the safe function of the fixed point.

## Properties

- Material: steel
- Bolts and nuts: strength class 8
- Zinc plating: electro zinc-plated
- Thermal capacity: -30 °C to +300 °C
- Note: Fixed point solid clamp FFPC and the threaded rod G16 (chapter „Accessories“ Art. no. 568434) are not included in the set.

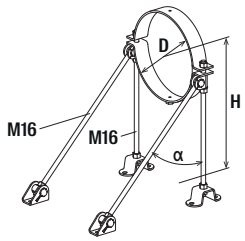


FFP-L22

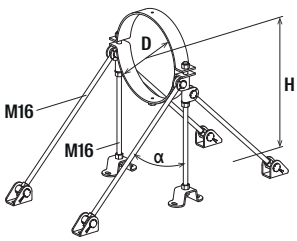


FFP-L42

## Technical data

| Item | Item no. | Max. recom. pipe-ø<br>D | Min. construction height<br>H<br>[mm] | Max. construction height<br>H<br>[mm] | Bracing angle<br>α<br>[°] | Max. recom. axial load<br>$F_{x\,rec.}$<br>[kN] | Sales unit<br>[pcs] |
|---|---|---|---|---|---|---|---|
| **FFP-L22** | **567699** | 193.7 | 200 | 500 | 35 - 45 | 4.0 | 1 |
| **FFP-L42** | **567700** | 193.7 | 250 | 500 | 35 - 45 | 7.0 | 1 |

Note: Maximum loads for orientation. Please contact fischer for the design of the fixed points. Load values for fixing with: 564586 Bolt anchor FAZ II Plus 12/10.
For detailed information on assembly, see the assembly instructions for download or as an enclosure to the article.

# Fixed point medium FFP-M / FFP-M2

The fixed point solutions for medium loads





Media lines with thermal expansion



## Applications

- Heating pipes
- Cooling lines
- Steam pipes
- Hot water and circulation pipes
- Media lines with thermal expansion
- For use in dry interior areas.

## Advantages

- The supports and braces on one or both sides of the variable fixed point allow adaptation to the distance of the pipeline to the subsoil.
- The fixed points consist of components with matching thread sizes and plug holes, thus ensuring easy assembly with the same tools.
- The height adjustment on the base plate allows for precise adjustment to match mounted pipelines and therefore ensures the safe function of the fixed point.
- The fixed point is suitable for mounting the FFPC fixed point solid clamp and FFRC refrigeration fixed point clamp for even more flexibility.

## Properties

- Material: steel
- Bolts and nuts: strength class 8
- Zinc plating: electro zinc-plated
- Thermal capacity: -30 °C to +300 °C
- Note: Fixed point solid clamps FFPC and FFRC and the threaded rod G16 and G1“ (chapter „Accessories“ Art. no. 568434 and 568435) are not included in the set.

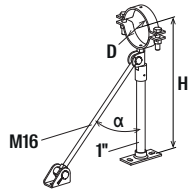


FFP-M with FFPC

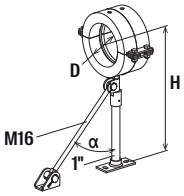


FFP-M with FFRC

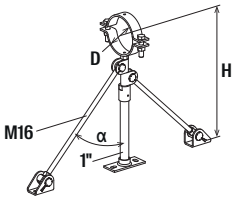


FFP-M2 with FFPC

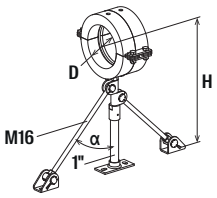


FFP-M2 with FFRC



## Technical data

| | Item no. | Max. recom. pipe-ø<br>D | Min. construction height<br>H<br>[mm] | Max. construction height<br>H<br>[mm] | Bracing angle<br>α<br>[°] | Max. recom. axial load<br>$F_{x\,rec.}$<br>[kN] | Sales unit<br>[pcs] |
|---|---|---|---|---|---|---|---|
| **Item** | | | | | | | |
| **FFP-M** | **567701** | 193.7 | 310 | 1,000 | 35 - 45 | 4.0 | 1 |
| **FFP-M2** | **567702** | 193.7 | 360 | 1,000 | 35 - 45 | 8.0 | 1 |

Note: Maximum loads for orientation. Please contact fischer for the design of the fixed points. Load values for fixing with: 564586 Bolt anchor FAZ II Plus 12/10.
For detailed information on assembly, see the assembly instructions for download or as an enclosure to the article.

# Fixed point medium FFP-M22 / -M42

The fixed point solutions for medium loads





Media lines with thermal expansion



## Applications

- Heating pipes
- Cooling lines
- Steam pipes
- Hot water and circulation pipes
- Media lines with thermal expansion
- For use in dry interior areas.

## Advantages

- The supports and braces on one or both sides of the variable fixed point allow adaptation to the distance of the pipeline to the subsoil.
- The fix points consist of components with matching thread sizes and plug holes, thus ensuring easy assembly with the same tools.
- The height adjustment on the base plate allows for precise adjustment to match mounted pipelines and therefore ensures the safe function of the fixed point.
- The axially and laterally adjustable bracing angles allow the subsoil connection to be adapted to the conditions on site and simplify the installation.

## Properties

- Material: steel
- Bolts and nuts: strength class 8
- Zinc plating: electro zinc-plated
- Thermal capacity: -30 °C to +300 °C
- Note: Fixed point solid clamp FFPC and the threaded rod G16 and G1“ (chapter „Accessories“ Art. no. 568434 and 568435) are not included in the set.

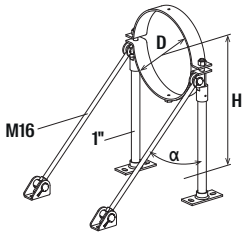


FFP-M22

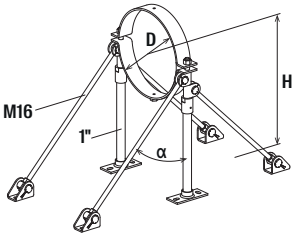


FFP-M42

## Technical data

| Item | Item no. | Max. recom. pipe-ø D [mm] | Min. construction height H [mm] | Max. construction height H [mm] | Bracing angle α [°] | Max. recom. axial load $F_{x\,rec.}$ [kN] | Sales unit [pcs] |
|---|---|---|---|---|---|---|---|
| **FFP-M22** | **567703** | 193.7 | 210 | 1,500 | 35 - 45 | 7.0 | 1 |
| **FFP-M42** | **567704** | 193.7 | 260 | 1,500 | 35 - 45 | 14.0 | 1 |

Note: Maximum loads for orientation. Please contact fischer for the design of the fixed points. Load values for fixing with: 564586 Bolt anchor FAZ II Plus 12/10.
For detailed information on assembly, see the assembly instructions for download or as an enclosure to the article.

# Fixed point medium FFP-MD2 / -MD4

The fixed point solutions for medium loads







Media lines with thermal expansion

## Applications

- Heating pipes
- Cooling lines
- Steam pipes
- Hot water and circulation pipes
- Media lines with thermal expansion
- For use in dry interior areas.

## Advantages

- The supports and braces on one or both sides allow adaptation to the distance of the pipeline to the subsoil.
- Easy assembly with the same tools can be ensured by components with the same thread sizes and plug holes.
- The height adjustment on the base plate allows for precise adjustment to match mounted pipelines and therefore ensures the safe function of the fixed point.
- The axially and laterally adjustable bracing angles allow the subsoil connection to be adapted to the conditions on site and simplify the installation.

## Properties

- Material: steel
- Bolts and nuts: strength class 8
- Zinc plating: electro zinc-plated
- Thermal capacity: -30 °C to +300 °C
- Note: Fixed point solid clamp FFPC and the threaded rod G16 and G1“ (chapter „Accessories“ Art. no. 568434 and 568435) are not included in the set.

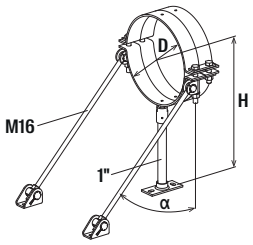


FFP-MD2-V1 and FFP-MD2-V2

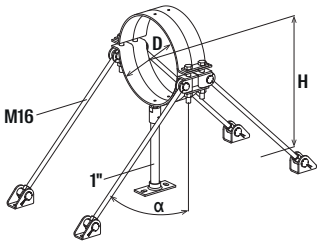


FFP-MD4-V1 and FFP-MD4-V2

## Technical data

| Item | Item no. | Max. recom. pipe-ø D | Min. construction height H [mm] | Max. construction height H [mm] | Bracing angle α [°] | Max. recom. axial load $F_{x\,rec.}$ [kN] | Sales unit [pcs] |
|---|---|---|---|---|---|---|---|
| **FFP-MD2-V1** | **567706** | 193.7 | 250 | 1,500 | 35 - 45 | 12.0 | 1 |
| **FFP-MD2-V2** | **567707** | 355.6 | 330 | 1,500 | 35 - 45 | 12.0 | 1 |
| **FFP-MD4-V1** | **567709** | 193.7 | 250 | 1,500 | 35 - 45 | 18.0 | 1 |
| **FFP-MD4-V2** | **567710** | 355.6 | 330 | 1,500 | 35 - 45 | 18.0 | 1 |

Note: Maximum loads for orientation. Please contact fischer for the design of the fixed points. Load values for fixing with: 564586 Bolt anchor FAZ II Plus 12/10.
For detailed information on assembly, see the assembly instructions for download or as an enclosure to the article.

# Fixed point heavy FFP-HD22 / FFP-HD42

The fixed point solutions for heavy loads



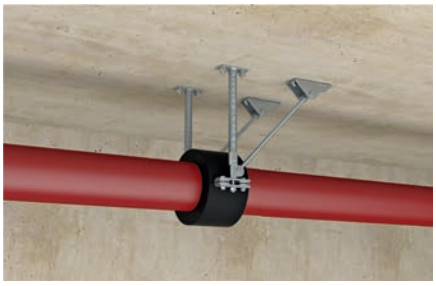

Media lines with thermal expansion



## Applications

- Heating pipes
- Cooling lines
- Steam pipes
- Hot water and circulation pipes
- Media lines with thermal expansion
- For use in dry interior areas.

## Advantages

- The supports and braces on one or both sides of the variable fixed point allow adaptation to the distance of the pipeline to the subsoil.
- The fixed points consist of components with matching thread sizes and plug holes, thus ensuring easy assembly with the same tools.
- The height adjustment on the base plate allows for precise adjustment to match mounted pipelines and therefore ensures the safe function of the fixed point.
- The axially and laterally adjustable bracing angles allow the subsoil connection to be adapted to the conditions on site and simplify the installation.
- The fixed point is suitable for mounting the FFPC fixed point solid clamp and FFRC refrigeration fixed point clamp for even more flexibility.

## Properties

- Material: steel
- Bolts and nuts: strength class 8
- Zinc plating: electro zinc-plated
- Thermal capacity: -30 °C to +300 °C
- Note: Fixed point solid clamps FFPC and FFRC and the threaded rod G16 and G1“ (chapter „Accessories“ Art. no. 568434 and 568435) are not included in the set.

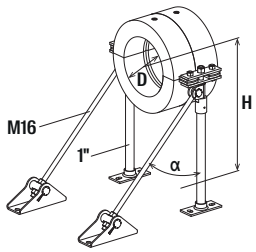


FFP-HD22

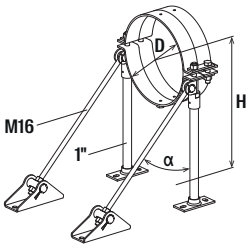


FFP-HD22-V1 and FFP-HD22-V2

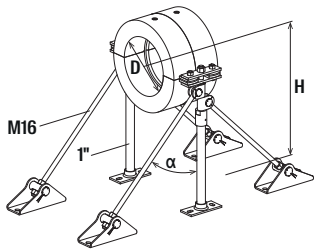


FFP-HD42

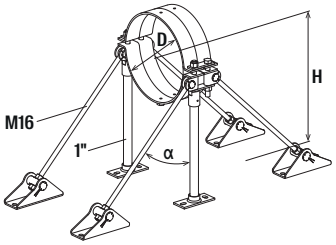


FFP-HD42-V1 and FFP-HD42-V2



## Technical data

| Item | Item no. | Max. recom. pipe-ø D | Min. construction height H [mm] | Max. construction height H [mm] | Bracing angle α [°] | Max. recom. axial load $F_{x\,rec.}$ [kN] | Sales unit [pcs] |
|---|---|---|---|---|---|---|---|
| **FFP-HD22** | **567711** | 355.6 | 300 | 2,000 | 35 - 45 | 18.0 | 1 |
| **FFP-HD22-V1** | **567712** | 193.7 | 300 | 2,000 | 35 - 45 | 18.0 | 1 |
| **FFP-HD22-V2** | **567713** | 355.6 | 300 | 2,000 | 35 - 45 | 18.0 | 1 |
| **FFP-HD42** | **567714** | 355.6 | 350 | 2,000 | 35 - 45 | 30.0 | 1 |
| **FFP-HD42-V1** | **567715** | 193.7 | 300 | 2,000 | 35 - 45 | 30.0 | 1 |
| **FFP-HD42-V2** | **567716** | 355.6 | 300 | 2,000 | 35 - 45 | 30.0 | 1 |

Note: Maximum loads for orientation. Please contact fischer for the design of the fixed points. Load values for fixing with: 564586 Bolt anchor FAZ II Plus 12/10; 564594 Bolt anchor FAZ II Plus 16/5
For detailed information on assembly, see the assembly instructions for download or as an enclosure to the article.

# Fixed point solid clamp FFPC

The solid fixed point clamp with load-optimized clamp band

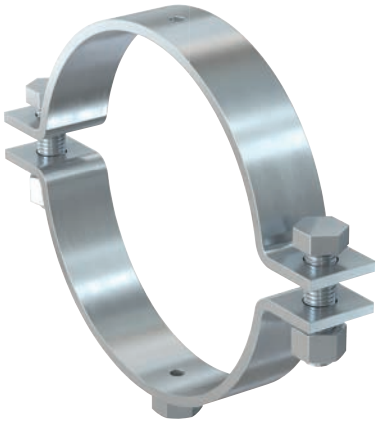



Media lines with thermal expansion



## Applications

- Heating pipes
- Steam pipes
- Hot water and circulation pipes
- Media lines with thermal expansion
- For use in dry interior areas.

## Advantages

- The FFRC Refrigeration clamp made of closed PUR foam can be used with all common insulation materials.
- The design of the FFRC Refrigeration clamp with external screw holes and internal welding ring enables the support of high loads.
- The age-resistant material ensures consistent function of the FFRC.
- The included connecting plates with matching connection holes and threads reduce the assembly effort by providing an optimal fit.
- The FFRC Refrigeration fixed point clamp can be mounted on the fixed point saddles FFS-M or FFS-H as well as on the braced fixed points FFP.

## Properties

- Material: steel
- Bolts and nuts: strength class 8
- Zinc plating: electro zinc-plated
- Thermal capacity: -30 °C to +300 °C

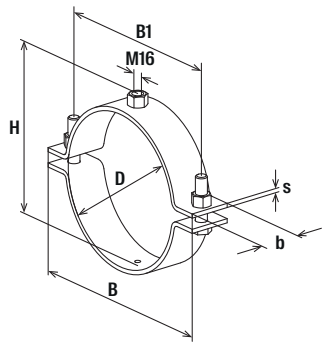


FFPC

## Technical data

| Item | Item no. | Size [in] | Clamping range D [mm] | Width B [mm] | Width B1 B1 [mm] | Height H [mm] | Width x thickness clamp band b x s [mm] | Locking screw | Max. recom. static load (centr. tension) $N_{rec}$ [kN] | Sales unit [pcs] |
|---|---|---|---|---|---|---|---|---|---|---|
| **FFPC 21** | **567717** | 1/2 | 21 | 91.7 | 60.7 | 45.4 | 40 x 4.0 | M16 | 10.15 | 2 |
| **FFPC 27** | **567718** | 3/4 | 27 | 97.7 | 66.7 | 51.4 | 40 x 4.0 | M16 | 10.15 | 2 |
| **FFPC 28** | **567719**[1)] | – | 28 | 98.7 | 67.7 | 52.4 | 40 x 4.0 | M16 | 10.15 | 2 |
| **FFPC 31** | **567720**[1)] | – | 31 | 101.7 | 70.7 | 55.4 | 40 x 4.0 | M16 | 10.15 | 2 |
| **FFPC 34** | **567721** | 1 | 34 | 104.7 | 73.7 | 58.4 | 40 x 4.0 | M16 | 10.15 | 2 |
| **FFPC 40** | **567722**[1)] | – | 40 | 110.7 | 79.7 | 64.4 | 40 x 4.0 | M16 | 10.15 | 2 |
| **FFPC 43** | **567723** | 1 1/4 | 43 | 113.7 | 82.7 | 67.4 | 40 x 4.0 | M16 | 10.15 | 2 |
| **FFPC 49** | **567724** | 1 1/2 | 49 | 119.7 | 88.7 | 73.4 | 40 x 4.0 | M16 | 10.15 | 2 |
| **FFPC 50** | **567725** | – | 50 | 120.7 | 89.7 | 74.4 | 40 x 4.0 | M16 | 10.15 | 2 |
| **FFPC 61** | **567726** | 2 | 61 | 131.7 | 100.7 | 85.4 | 40 x 4.0 | M16 | 10.15 | 2 |
| **FFPC 63** | **567727** | – | 63 | 145.1 | 110.1 | 91.4 | 40 x 6.0 | M16 | 17.60 | 2 |
| **FFPC 70** | **567728** | – | 70 | 152.1 | 117.1 | 98.4 | 40 x 6.0 | M16 | 17.60 | 2 |
| **FFPC 76.1** | **567729** | 2 1/2 | 76.1 | 158.2 | 123.2 | 104.5 | 40 x 6.0 | M16 | 17.60 | 2 |
| **FFPC 88.9** | **567730** | 3 | 88.9 | 171 | 136 | 117.3 | 40 x 6.0 | M16 | 17.60 | 2 |
| **FFPC 108** | **567731**[1)] | – | 108 | 190.1 | 155.1 | 136.4 | 40 x 6.0 | M16 | 17.60 | 2 |
| **FFPC 114.3** | **567732** | 4 | 114.3 | 196.4 | 161.4 | 142.7 | 40 x 6.0 | M16 | 17.60 | 2 |
| **FFPC 133** | **567733**[1)] | – | 133 | 215.1 | 180.1 | 161.4 | 40 x 6.0 | M16 | 17.60 | 2 |
| **FFPC 139.7** | **567734** | 5 | 139.7 | 221.8 | 186.8 | 168.1 | 40 x 6.0 | M16 | 17.60 | 2 |
| **FFPC 159** | **567735** | – | 159 | 241.1 | 206.1 | 187.4 | 40 x 6.0 | M16 | 17.60 | 2 |
| **FFPC 168.3** | **567736** | 6 | 168.3 | 250.4 | 215.4 | 196.4 | 40 x 6.0 | M16 | 17.60 | 2 |
| **FFPC 193.7** | **567737**[1)] | – | 193.7 | 275.8 | 240.8 | 222.1 | 40 x 6.0 | M16 | 17.60 | 2 |
| **FFPC 219.1** | **567738** | 8 | 219.1 | 305 | 269.8 | 247.5 | 60 x 6.0 | M16 | 22.30 | 2 |
| **FFPC 267** | **567739**[1)] | – | 267 | 352.9 | 317.7 | 295.4 | 60 x 6.0 | M16 | 22.30 | 2 |
| **FFPC 273** | **567740** | 10 | 273 | 358.9 | 323.7 | 301.4 | 60 x 6.0 | M16 | 22.30 | 2 |
| **FFPC 323.9** | **567741** | 12 | 323.9 | 409.8 | 374.6 | 352.3 | 60 x 6.0 | M16 | 22.30 | 2 |
| **FFPC 355.6** | **567742**[1)] | 14 | 355.6 | 441.5 | 406.3 | 384 | 60 x 6.0 | M16 | 22.30 | 2 |

[1)] Delivery time on request

# Refrigeration fixed point clamp FFRC

Fixed point pipe clamp with rigid foam insulation for absorbing pipe expansions in cold-running pipelines

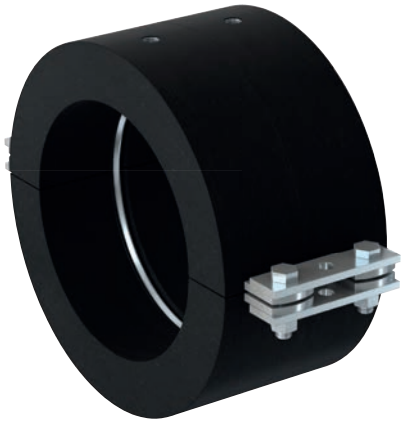



Cold running media lines



## Applications

- Cooling lines
- Refrigeration lines
- Cold running media lines
- For use in dry interior areas.

## Advantages

- The FFRC Refrigeration clamp made of closed PUR foam can be used with all common insulation materials.
- The design of the FFRC Refrigeration clamp with external screw holes and internal welding ring enables the support of high loads.
- The age-resistant material ensures consistent function of the FFRC.
- The included connecting plates with matching connection holes and threads reduce the assembly effort by providing an optimal fit.
- The FFRC Refrigeration fixed point clamp can be mounted on the fixed point saddles FFS-M or FFS-H as well as on the braced fixed points FFP.

## Properties

- Material: closed-cell polyurethane foam, silicone-free, halogen-free
- Density: 250 kg/m³
- Heat conductivity: 0.045 W/(m*K)
- Fire behaviour: DIN 4102: Class B2
- Diffusion resistance: >1000 µ
- Compressive strength: 3,96 mPa at 23 °C
- Temperature range: -50 °C to +105 °C
- Material steel clamp: steel, electro zinc-plated
- Material welding ring: steel

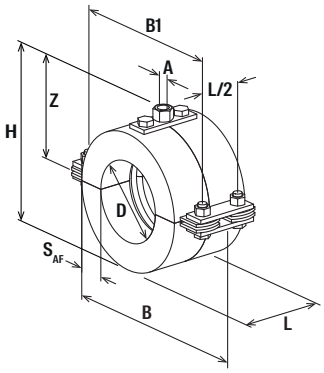


FFRC with coupler (to 168,3)

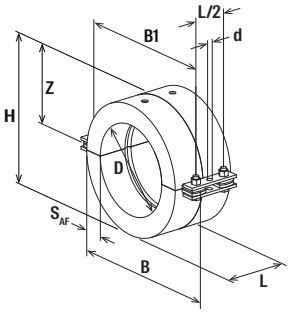


FFRC without coupler (above 193,7)

## 6 Technical data

| Item | Item no. | Size [in] | Clamping range D [mm] | Thread A | Hole-Ø d [mm] | Insulation thickness $S_{AF}$ [mm] | Length of insulation material L [mm] | Width B [mm] | Width B1 [mm] | Height H [mm] | Height Z [mm] | Max. recom. static load (centr. tension) $Z_{z\,rec.}$ [kN] | Max. recom. axial load $F_{x\,rec.}$ [kN] | Installation torque (Bolt Connector Screws) $T_{inst.BC}$ [Nm] | Installation torque (Coupler) $T_{inst.Co}$ [Nm] | Sales unit [pcs] |
|---|---|---|---|---|---|---|---|---|---|---|---|---|---|---|---|---|
| **FFRC 76.1** | **567747** | 2 1/2 | 76.1 | M16 | – | 30 | 100 | 203 | 173 | 156 | 88 | 3.60 | 2.5 | 12 | 12 | 1 |
| **FFRC 88.9** | **567748** | 3 | 88.9 | M16 | – | 30 | 100 | 211 | 181 | 169 | 94 | 4.30 | 3.0 | 12 | 12 | 1 |
| **FFRC 108** | **567749** | – | 108 | M16 | – | 30 | 120 | 230 | 200 | 187 | 103 | 6.50 | 4.0 | 20 | 12 | 1 |
| **FFRC 114.3** | **567750** | 4 | 114.3 | M16 | – | 40 | 120 | 274 | 238 | 212 | 116 | 6.90 | 4.0 | 20 | 20 | 1 |
| **FFRC 133** | **567751** | – | 133 | M16 | – | 40 | 120 | 300 | 264 | 233 | 126 | 7.70 | 4.5 | 20 | 20 | 1 |
| **FFRC 139.7** | **567752** | 5 | 139.7 | M16 | – | 40 | 120 | 264 | 300 | 236 | 128 | 8.10 | 4.5 | 20 | 20 | 1 |
| **FFRC 159** | **567753** | – | 159 | M16 | – | 40 | 120 | 319 | 283 | 258 | 139 | 9.20 | 6.0 | 20 | 20 | 1 |
| **FFRC 168.3** | **567754** | 6 | 168.3 | M16 | – | 40 | 120 | 328 | 292 | 272 | 146 | 9.70 | 6.0 | 20 | 20 | 1 |
| **FFRC 193.7** | **567755**[1)] | – | 193.7 | – | 17 | 60 | 200 | 439 | 399 | 340 | 170 | 23.00 | 9.0 | 45 | 45 | 1 |
| **FFRC 219.1** | **567756** | 8 | 219.1 | – | 17 | 60 | 200 | 439 | 399 | 340 | 170 | 23.00 | 9.0 | 45 | – | 1 |
| **FFRC 273** | **567757** | 10 | 273 | – | 17 | 60 | 200 | 493 | 453 | 393 | 197 | 28.00 | 12.0 | 45 | – | 1 |
| **FFRC 323.9** | **567758** | 12 | 323.9 | – | 17 | 60 | 200 | 544 | 504 | 448 | 224 | 32.80 | 15.0 | 45 | – | 1 |
| **FFRC 355.6** | **567759**[1)] | 14 | 355.6 | – | 17 | 60 | 200 | 576 | 536 | 477 | 239 | 36.00 | 17.0 | 45 | – | 1 |
| **FFRC 368** | **567760**[1)] | – | 368 | – | 17 | 60 | 240 | 588 | 548 | 492 | 246 | 46.30 | 17.0 | 45 | – | 1 |
| **FFRC 406.4** | **567761**[1)] | 16 | 406.4 | – | 17 | 60 | 240 | 646 | 596 | 530 | 265 | 50.40 | 19.0 | 45 | – | 1 |
| **FFRC 457** | **567762**[1)] | 18 | 457 | – | 17 | 60 | 240 | 697 | 647 | 578 | 289 | 57.10 | 19.0 | 45 | – | 1 |
| **FFRC 508** | **567763**[1)] | 20 | 508 | – | 17 | 60 | 240 | 748 | 698 | 635 | 318 | 62.40 | 20.0 | 45 | – | 1 |
| **FFRC 609** | **567764**[1)] | 24 | 609 | – | 17 | 60 | 280 | 848 | 798 | 731 | 366 | 89.20 | 25.0 | 45 | – | 1 |

[1)] Delivery time on request

Note on the required adhesive: 59389 fischer construction adhesive Multi MS white 290 ml; 503318 fischer construction adhesive Multi MS grey 290 ml
Note on loads: The loads apply to the FFRC without considering wether the associated fix point design is a braced fix point or fix point saddle. The component with the lower load specification determines the loads.

# Sound insulated fixed point FSFP

The compact fixed point with a sound insulation insert



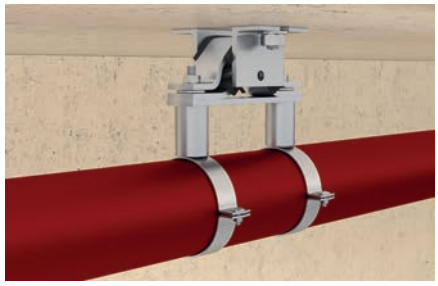

Sound insulated fixpoint at ceiling



## Applications

- Prevention of unwanted displacement between the pipes and the structures.
- Ensuring of the expansion into the desired direction.
- For use in dry interior areas.

## Advantages

- The supports and braces on one or both sides of the variable fixed point allow adaptation to the distance of the pipeline to the subsoil
- The fixed points consist of components with matching thread sizes and plug holes, thus ensuring easy assembly with the same tools.
- The height adjustment on the base plate allows for precise adjustment to match mounted pipelines and therefore ensures the safe function of the fixed point.

## Properties

- Clamp strap: StW22 (material no. 1.0032)
- Base plate: S235JR (material no. 1.0038)
- Zinc plating: electro zinc-plated
- Elastomer: ISO 1629 SBR/EPDM chlorine-free and silicone-free
- Temperature range: -40 °C to +100 °C

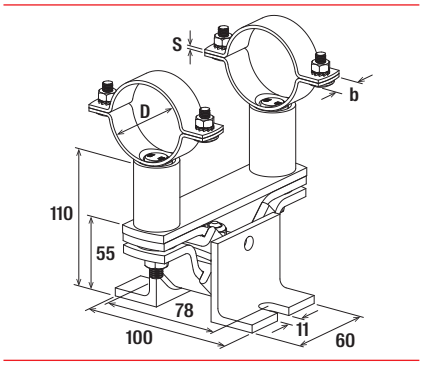


FSFP

## Technical data

| Item | Item no. | Size [in] | Clamping range D [mm] | Locking screw | Width x thickness clamp band b x s [mm] | Sales unit [pcs] |
|---|---|---|---|---|---|---|
| FSFP 1“ | 512716 | 1 | 33.7 | M6 | 20 x 1.5 | 1 |
| FSFP 1 1/4“ | 512717 | 1 1/4 | 42.4 | M6 | 20 x 2 | 1 |
| FSFP 1 1/2“ | 512718 | 1 1/2 | 48.3 | M6 | 20 x 2 | 1 |
| FSFP 2“ | 512719 | 2 | 60.3 | M8 | 22 x 1.5 | 1 |
| FSFP 2 1/2“ | 512720 | 2 1/2 | 76.1 | M8 | 22 x 1.5 | 1 |

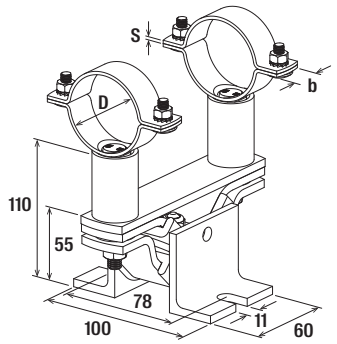


FSFP

## Technical data

6

| Item | Item no. | Size [in] | Clamping range D [mm] | Locking screw | Width x thickness clamp band b x s [mm] | Sales unit [pcs] |
|---|---|---|---|---|---|---|
| **FSFP 3“** | **512721** | 3 | 88.9 | M8 | 22 x 1.5 | 1 |
| **FSFP 4“** | **512722** | 4 | 114.3 | M8 | 22 x 1.5 | 1 |

# Axial slider compact FASC

The compact axial slider with combination connecting thread

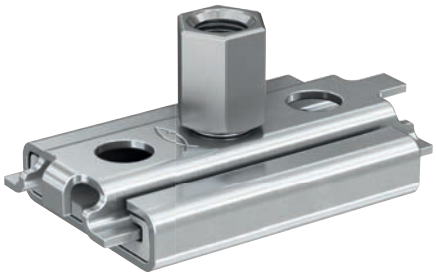



Media lines with thermal expansion



## Applications

- Heating pipes
- Cooling lines
- Hot water and circulation pipes
- Media lines with thermal expansion
- For use in dry interior areas.

## Advantages

- The FASC can be used flexibly, thanks to the application options as a standing or hanging slider.
- The low sliding friction of the plastic sliding pad enables optimum force application at the fixed point.
- The base plate of the FASC is compatible with the FLS and FUS channel systems and allows fixing with only one screw.
- The flexible combination thread allows the use of pipe clamps of various sizes.

## Properties

- Material: steel
- Zinc plating: electro zinc-plated
- Sliding strip material: glass fiber reinforced polyamide
- Thermal capacity: -30 °C to +130 °C

## Installation FASC on FUS channel

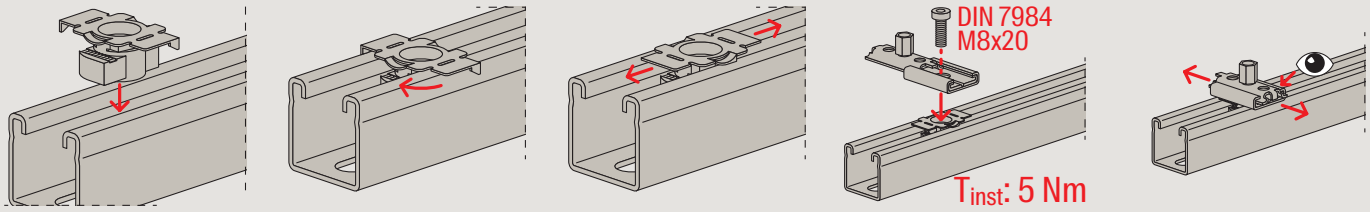


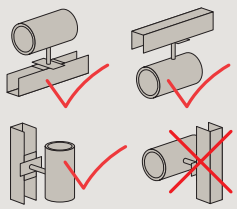

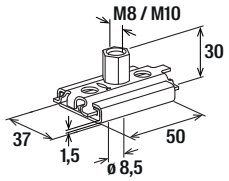


FASC M8/M10

## Technical data

| | Item no. | Thread<br>A | Length<br>L<br>[mm] | Width<br>B<br>[mm] | Height<br>H<br>[mm] | Thickness<br>S<br>[mm] | Max. recommended static load (suspended)<br>$N_{rec}$<br>[kN] | Max. recommended static load (upright)<br>$N_{rec}$<br>[kN] | Static friction factor<br>µh | Sliding friction factor<br>µg | Max. sliding distance<br>[mm] | Sales unit<br>[pcs] |
|---|---|---|---|---|---|---|---|---|---|---|---|---|
| **Item** | | | | | | | | | | | | |
| **FASC M8/10** | **567948** | M8 / M10 | 50 | 37 | 30 | 1.5 | 0.7 | 0.7 | 0.18 | 0.14 | 42 | 50 |

# Axial slider light FASL

The light axial slider with single or double mount and single or combination connection thread

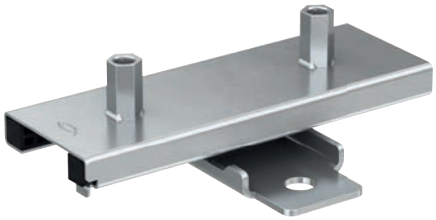



Media lines with thermal expansion



Media lines with thermal expansion



## Applications

- Heating pipes
- Cooling lines
- Hot water and circulation pipes
- Media lines with thermal expansion
- For use in dry interior areas.

## Advantages

- The FASL can be used flexibly, thanks to the application options as a standing or hanging slider and as a guide bearing on vertical pipelines.
- The low sliding friction of the plastic sliding rails enables optimum force application at the fixed point.
- The large sliding path and the long slide rails allow large expansions to be accommodated without any problems.
- The base plate of the FASL is compatible with the FLS and FUS channel systems and allows fixing with one or two screws.
- The flexible combination thread allows the use of pipe clamps of various sizes.

## Properties

- Material: steel
- Zinc plating: electro zinc-plated
- Sliding strip material: glass fiber reinforced polyamide
- Thermal capacity: -30 °C to +130 °C

## Installation FASL on FUS channel

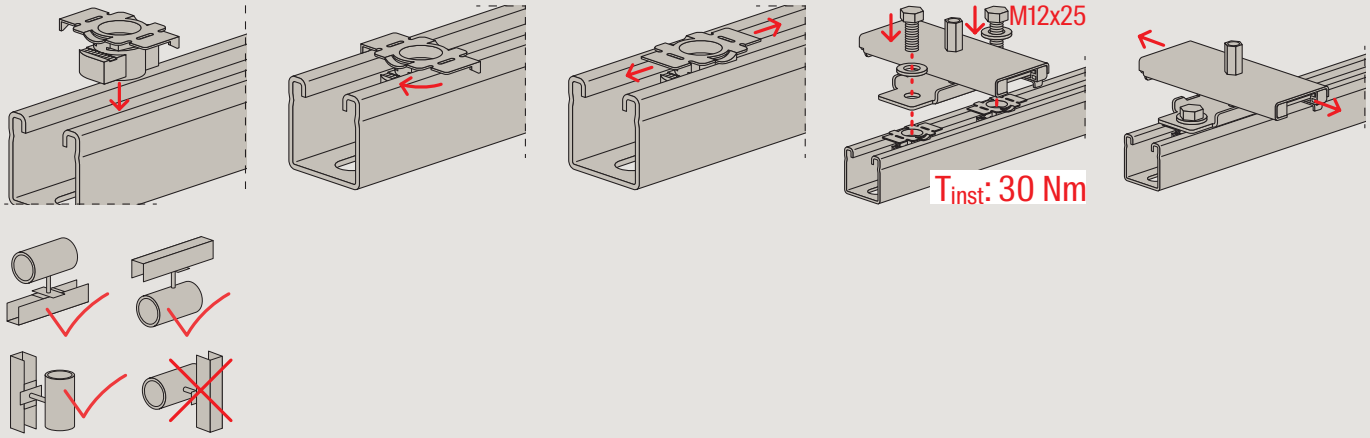

## Cross-slide function through double mounting with FASL2 M10

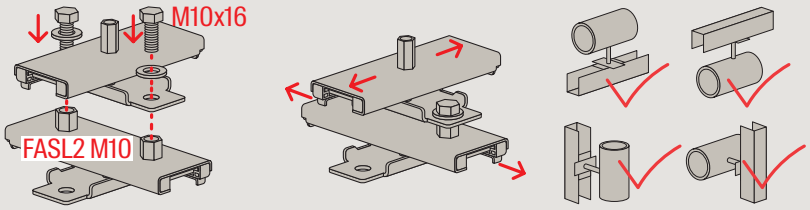


## Cross-slide function with FCSM

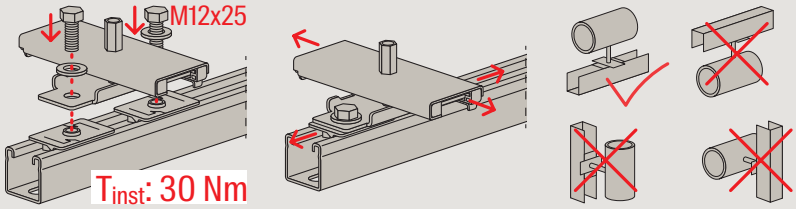


## Installation FASL with central fixing on FUS channel

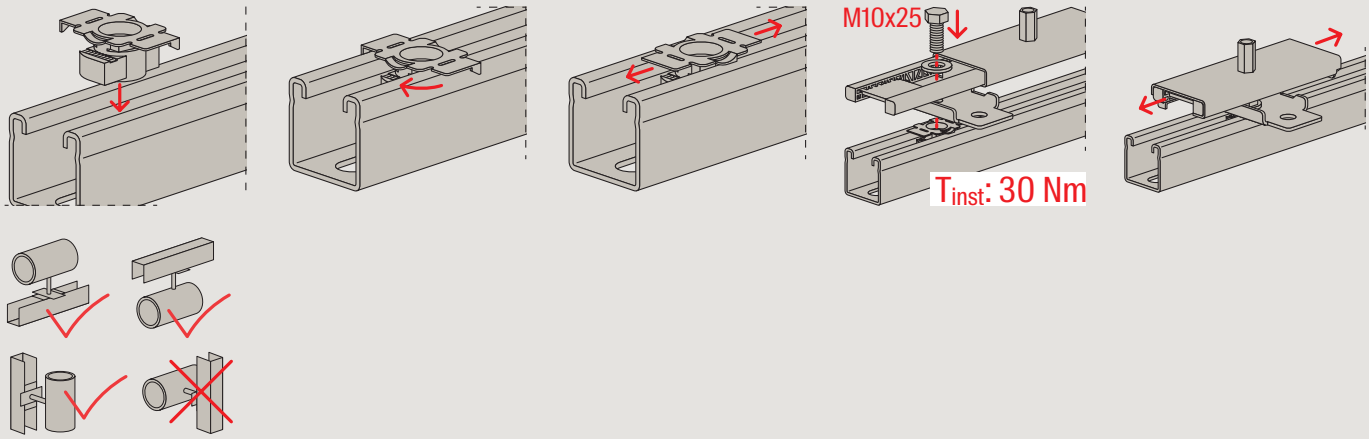


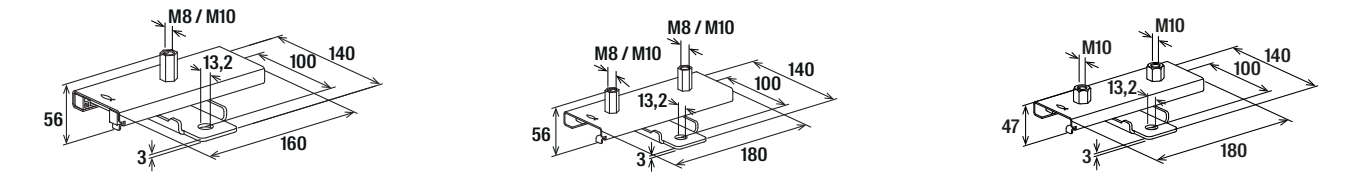


FASL1 M8/M10

FASL2 M8/M10

FASL2 M10

## Technical data

| Item | Item no. | Thread<br>A | Length<br>L<br>[mm] | Width<br>B<br>[mm] | Height<br>H<br>[mm] | Max. recommended static load (suspended)<br>$N_{rec}$<br>[kN] | Max. recommended static load (upright)<br>$N_{rec}$<br>[kN] | Static friction factor<br>µh | Sliding friction factor<br>µg | Max. recommended lever arm<br>[mm] | Max. sliding distance<br>[mm] | Sales unit<br>[pcs] |
|---|---|---|---|---|---|---|---|---|---|---|---|---|
| **FASL1 M8/10** | **567949** | M8 / M10 | 160 | 140 | 56 | 1.2 | 1.2 | 0.18 | 0.14 | 200 | 100 | 10 |
| **FASL2 M8/10** | **568670** | M8 / M10 | 180 | 140 | 56 | 1.5 | 1.5 | 0.18 | 0.14 | 200 | 120 | 10 |
| **FASL2 M10** | **567950** | M10 | 180 | 140 | 47 | 1.5 | 1.5 | 0.18 | 0.14 | 200 | 120 | 10 |

# Axial slider medium FASM

The medium axial slider with single or double mount and combination connection thread

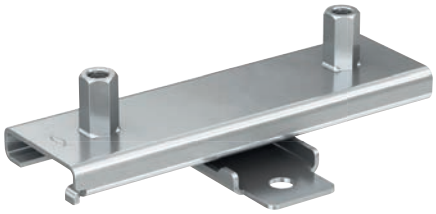



Media lines with thermal expansion



Media lines with thermal expansion



## Applications

- Heating pipes
- Cooling lines
- Steam pipes
- Hot water and circulation pipes
- Media lines with thermal expansion
- For use in dry interior areas.

## Certificates

R 120

R 30 MLAR

## Advantages

- The fire test report according to MLAR R30 up to a maximum of R120 guarantees objectively tested safety of function.
- The FASM can be used flexibly, thanks to the application options as a standing or hanging slider and as a guide bearing on vertical pipelines.
- The low sliding friction of the plastic sliding rails enables optimum force application at the fixed point.
- The large sliding path and the long slide rails allow large expansions to be accommodated without any problems.
- The base plate of the FASM is compatible with the FUS and FMS channel systems and allows fixing with one or two screws.
- A cross-slide function of the FASM is possible with the FCSM cross slider as well as with the FASL2 M10.

## Properties

- Material: steel
- Zinc plating: electro zinc-plated
- Sliding strip material: glass fiber reinforced polyamide
- Thermal capacity: -30 °C to +130 °C

## Installation FASM on FUS channel

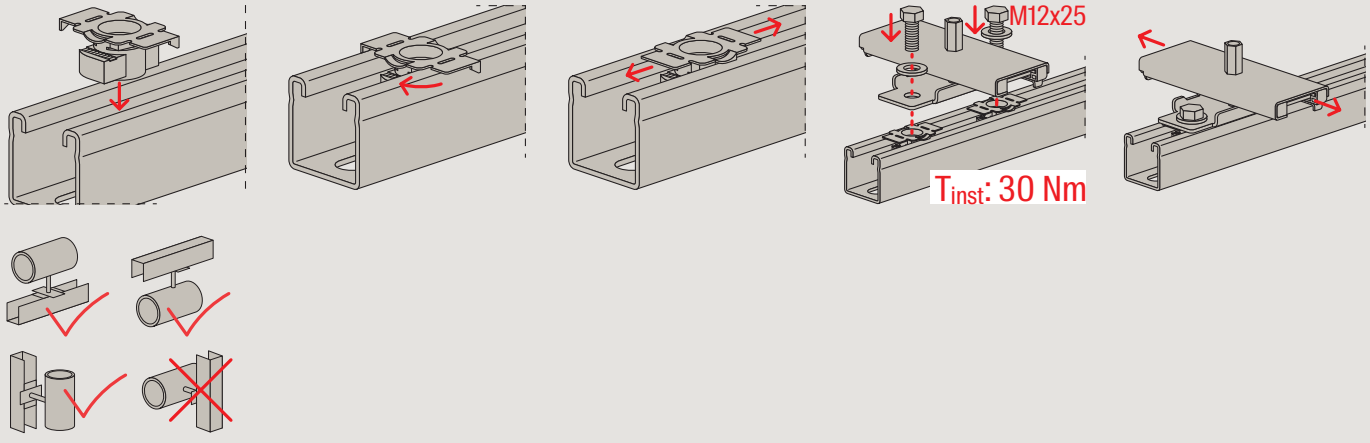

## Cross-slide function through double mounting with FASL2 M10

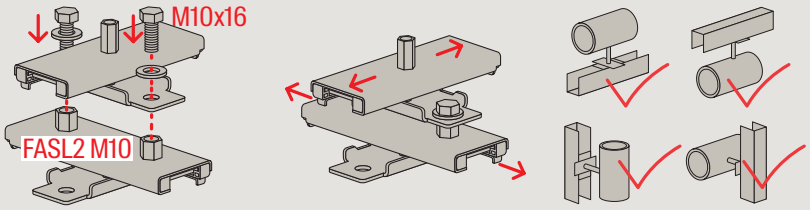


## Cross-slide function with FCSM

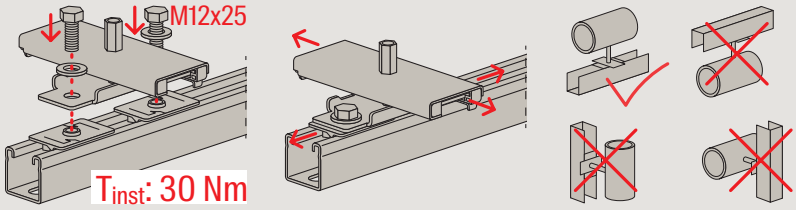


## Installation FASM with central fixing on FUS channel

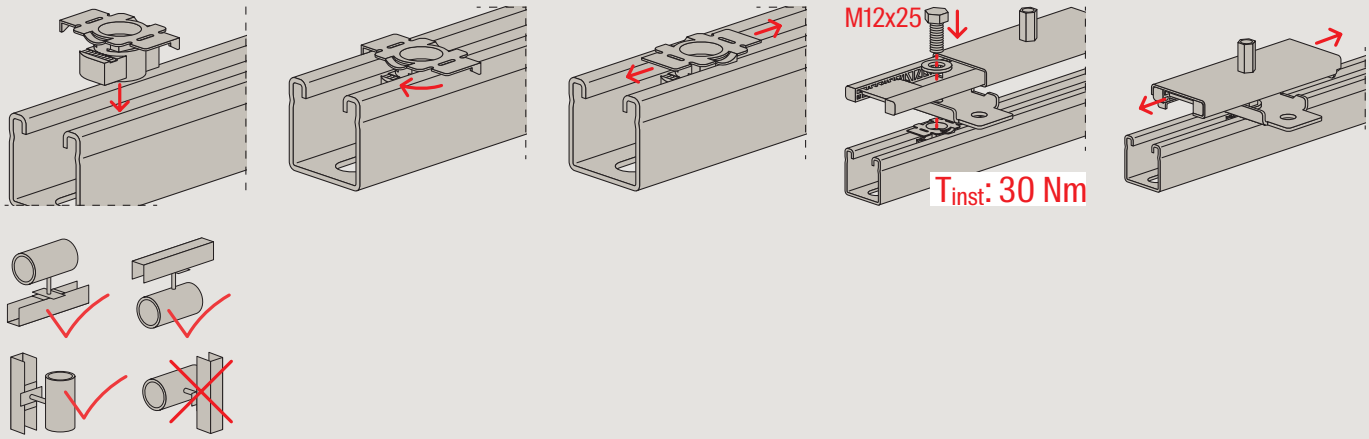


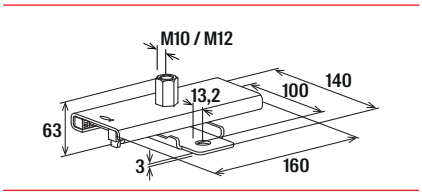


FASM1 M10/M12

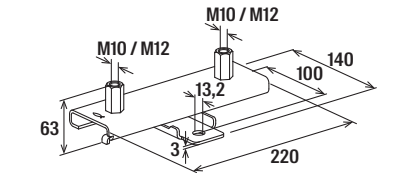


FASM2 M10/M12

## Technical data

| Item | Item no. | Fire test report | Thread A | Length L [mm] | Width B [mm] | Thickness S [mm] | Max. recommended static load (suspended) $N_{rec}$ [kN] | Max. recommended static load (upright) $N_{rec}$ [kN] | Static friction factor µh | Sliding friction factor µg | Max. recommended lever arm [mm] | Max. sliding distance [mm] | Sales unit [pcs] |
|---|---|---|---|---|---|---|---|---|---|---|---|---|---|
| **FASM1 M10/12** | **567951** | – | M10 / M12 | 160 | 140 | 3.0 | 2.5 | 2.5 | 0.18 | 0.14 | 200 | 100 | 10 |
| **FASM2 M10/12** | **567952** | Yes | M10 / M12 | 220 | 140 | 3.0 | 3.0 | 3.0 | 0.18 | 0.14 | 200 | 150 | 10 |

For load information under fire exposure, see chapter Basic knowledge.

# Axial roller slider heavy FASH

The heavy axial roller slider with single or double mount and combination connection thread

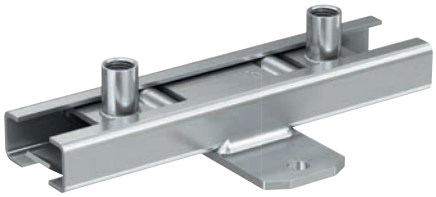

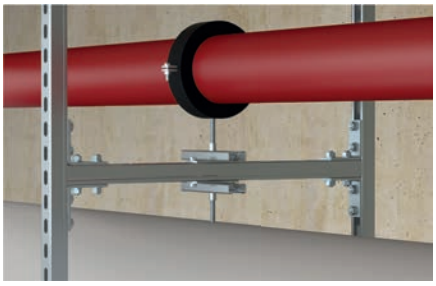

Media lines with thermal expansion



Media lines with thermal expansion



## Applications

- Heating pipes
- Cooling lines
- Steam pipes
- Hot water and circulation pipes
- Media lines with thermal expansion
- For use in dry interior areas.

## Certificates

R 120

R 30 MLAR

## Advantages

- The fire test report according to MLAR R30 up to a maximum of R120 guarantees objectively tested safety of function.
- The FASH can be used flexibly, thanks to the application options as a standing or hanging slider and as a guide bearing on vertical pipelines.
- The low sliding friction of the two sliding rollers enables optimum force application at the fixed point.
- The large sliding path and the two sliding rollers allow large expansions to be accommodated without any problems.
- The base plate of the FASH is compatible with the FUS and FMS channel systems and allows fixing with one or two screws.
- A cross-slide function of the FASH1 or FASH2 is possible with the FCSM cross slider as well as with the FASH2.

## Properties

- Material: steel
- Zinc plating: electro zinc-plated
- Thermal capacity: -30 °C to +300 °C

## Installation FASH on FUS channel

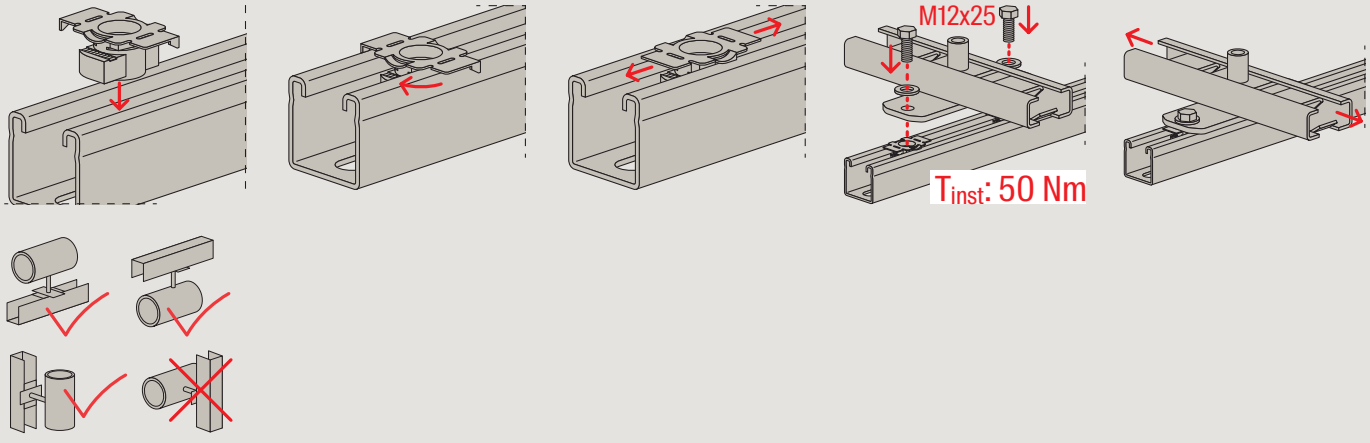

## Cross-slide function through double mounting with FASH2 M12/16

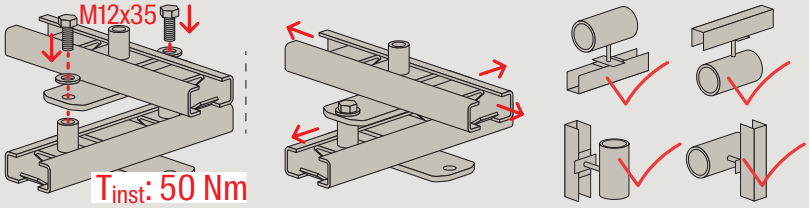


## Cross-slide function with FCSM

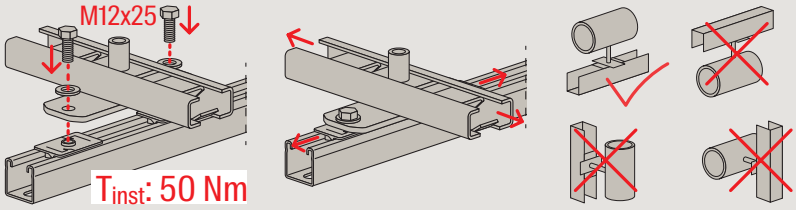


## Installation FASH on FMP channel

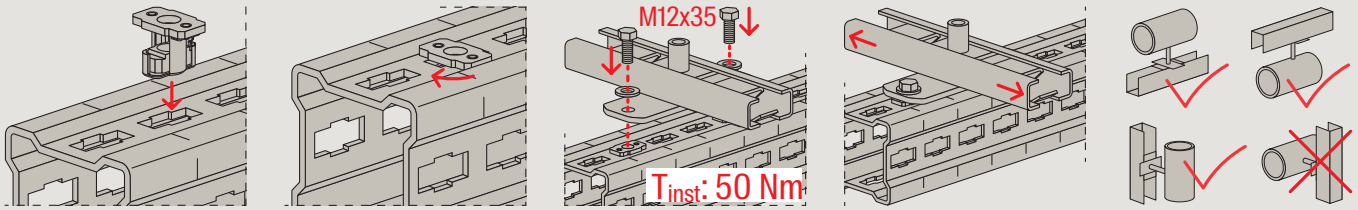


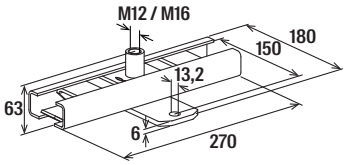


FASH1 M12/M16

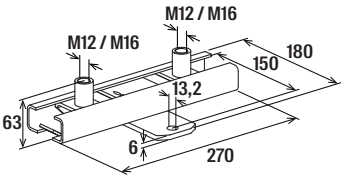


FASH2 M12/M16

## Technical data

| | Item no. | Fire test report | Thread<br>A | Length<br>L<br>[mm] | Width<br>B<br>[mm] | Height<br>H<br>[mm] | Thick-ness<br>S<br>[mm] | Max. recom-mended static load (suspen-ded)<br>$N_{rec}$<br>[kN] | Max. recom-mended static load (upright)<br>$N_{rec}$<br>[kN] | Static friction factor<br>µh | Sliding friction factor<br>µg | Max. recom-mended lever arm<br>[mm] | Max. sliding distance<br>[mm] | Sales unit<br>[pcs] |
|---|---|---|---|---|---|---|---|---|---|---|---|---|---|---|
| **Item** | | | | | | | | | | | | | | |
| **FASH1 M12/16** | **567953** | – | M12 / M16 | 270 | 180 | 63 | 6.0 | 6.5 | 6.5 | 0.06 | 0.06 | 400 | 140 | 5 |
| **FASH2 M12/16** | **567954** | Yes | M12 / M16 | 270 | 180 | 63 | 6.0 | 10.0 | 10.0 | 0.06 | 0.06 | 400 | 140 | 5 |

For load information under fire exposure, see chapter Basic knowledge.

# Cross slider FCSM

The channel slider for all load levels





Media lines with thermal expansion



## Applications

- Heating pipes
- Cooling lines
- Steam pipes
- Hot water and circulation pipes
- Media lines with thermal expansion
- For indoor and outdoor application.

## Advantages

- The simple connection of the FCSM Cross Slider with the FUS mounting channels by simply inserting and rotating by 45° also allows subsequent installation at any position.
- Due to the application as a upright slider in the FUS mounting channels, the FCSM is the universal cross slider substructure for all axial and roller sliders.
- The unique design and the use as a single glider or double glider enable a high load capacity.
- The low sliding friction of the plastic sliding surface minimizes resistance during lateral expansion.

## Properties

- Material: steel
- Zinc plating: hot-dip galvanised
- Material plastic components: glass fiber reinforced polyamide
- Thermal capacity: -30 °C to +130 °C

## Installation FCSM

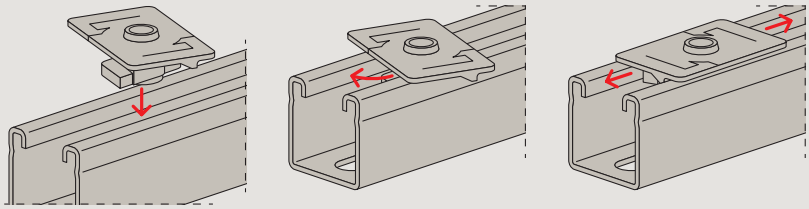

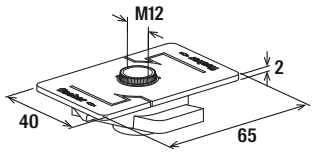


FCSM

## Technical data

| | Item no. | Thread<br>A | Length<br>L<br>[mm] | Width<br>B<br>[mm] | Height<br>H<br>[mm] | Thickness<br>S<br>[mm] | Max. recommended static load (upright)<br>$N_{rec}$<br>[kN] | Static friction factor<br>µh | Sliding friction factor<br>µg | Sales unit<br>[pcs] |
|---|---|---|---|---|---|---|---|---|---|---|
| **Item** | | | | | | | | | | |
| **FCSM M12** | **567955**[1)] | M12 | 65 | 40 | 21 | 2.0 | 5.0 | 0.2 | 0.16 | 50 |

[1)] Max. recommended lever arm: with FASL and FASM: 200 mm; with FASH: 300 mm. Sliding and static friction values apply to galvanised and hot-dip galvanised FUS mounting channels.

# Sliding hanger SB

Sliding hanger SB - the lightweight sliding element with fire test report



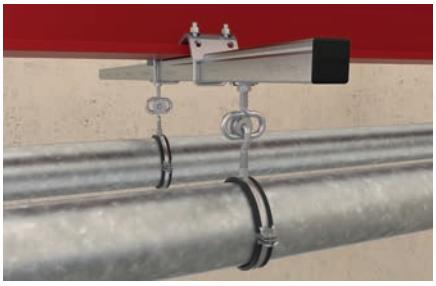

Channel with sliding element



Channel to steelbeam



## Applications

- Adjustments of axial length to pipelines.
- Installation of sliding elements in line with the expected length expansions (Ensuring that no sliding distance is lost and sliding isn‘t inhibited).
- For use in dry interior areas.

## Advantages

- The design of the sliding hanger allows pipes to be mounted securely and easily.
- The sliding hanger is ideally suited to adjust the axial length of pipelines.

## Properties

- Material: steel DD11 (material no. 1.0332) acc. to DIN EN 10111
- Zinc plating: electro zinc-plated

## Certificates

R 120

R 30 MLAR

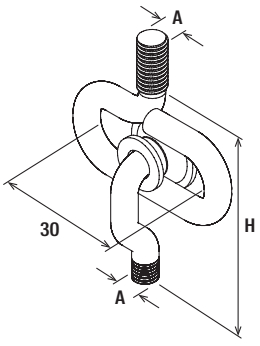


SB

## Technical data

| Item | Item no. | Fire test report | Height H [mm] | Max. recom. static load (centr. tension) [kN] | Sales unit [pcs] |
|---|---|---|---|---|---|
| SB M 8 | 079680 | – | 75 | 0.40 | 25 |
| SB M 10 | 079681 | Yes | 90 | 0.65 | 25 |

For load information under fire exposure, see chapter Basic knowledge.

# Pendulum hanger PDH / PDH K

Pendulum hanger PDH / PDH K - the single fixing element for length expansion





Double pendulum hanger



## Applications

- Single fixing for the absorption of pipeline length adjustments in any direction.
- Installation of the pendulum in pairs for pipe movement without tipping.
- Secure threaded rod with lock nut to prevent loosening.
- For use in dry interior areas.

## Advantages

- The design of the pendulum hanger allows a rotation of 360°.
- The pendulum hanger‘s screw-in sleeve allows for large height adjustments.
- The max. pendulum angle of 12° enables the absorption of large expansions.
- The screw-in depth of the threaded bolts guarantees a high tension load.

## Properties

- Material: steel DD11 (material no. 1.0332) acc. to DIN EN 10111
- Zinc plating: electro zinc-plated

## Certificates

R 120

R 30 MLAR

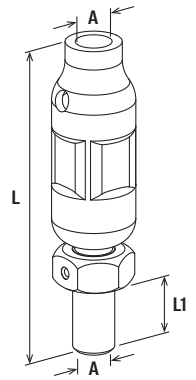


PDH



## Technical data

| Item | Item no. | Fire test report | Thread<br>A | Length<br>L<br>[mm] | Length<br>L1<br>[mm] | Max. recom. static load (centr. tension)<br>[kN] | Sales unit<br>[pcs] |
|---|---|---|---|---|---|---|---|
| **PDH K M 8** | **068267** | – | M8 | 50 | 18 | 2.40 | 50 |
| **PDH K M 10** | **068269** | Yes | M10 | 54 | 18 | 3.00 | 50 |
| **PDH M 8** | **079676** | – | M8 | 76 | 18 | 2.40 | 50 |
| **PDH M 10** | **079677** | Yes | M10 | 80 | 18 | 3.00 | 50 |
| **PDH M 12** | **064037** | Yes | M12 | 90 | 20 | 3.50 | 25 |

For load information under fire exposure, see chapter Basic knowledge.

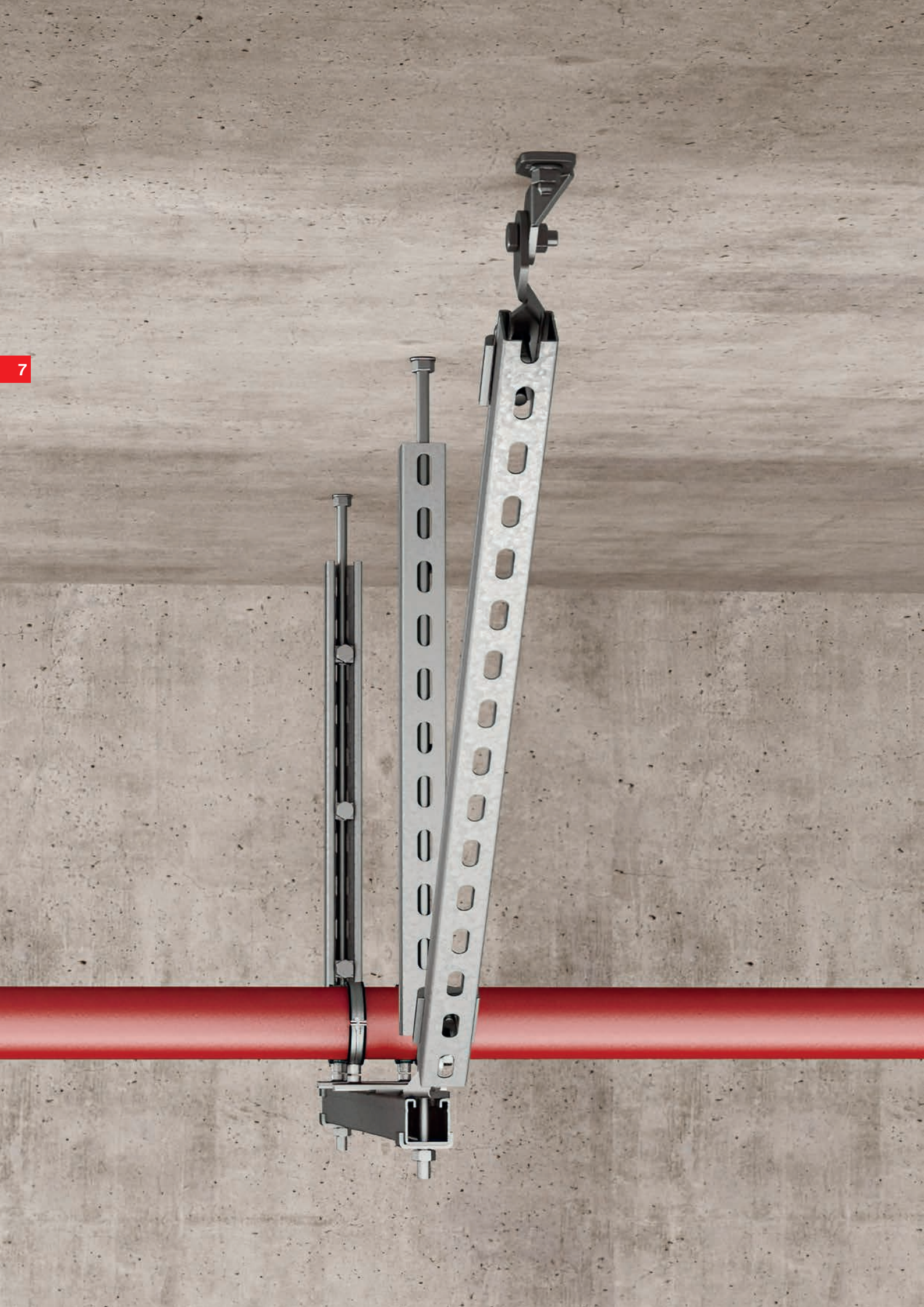

# 7

# Seismic bracing assortment




| CHANNEL BRACING ELEMENTS | | |
|---|---|---|
| Shaped reinforcement strut SAE | 232 |  |
| Threaded rod brace connector S-VA | 233 |  |
| Channel brace connector S-VB | 234 |  |
| 90° angle connector S-FAF | 235 |  |
| Seismic wire cable system FWI-S | 236 |  |

| ACCESSORIES | | |
|---|---|---|
| Threaded rod connector S-ROD | 239 |  |
| Rod stiffener FTRC M12 | 240 |  |

# Shaped reinforcement strut SAE

Shaped reinforcement strut for bracing FUS channel profiles and FCA cantilevers





Bracing of cantilever construction



## Applications

- Seismic bracing of framework constructions with FUS channels and FCA cantilevers.
- For use in dry interior areas.

## Advantages

- The shaped L enables the fixing of the bracing not only in the horizontal but also at the vertical level.
- The stable shaped reinforcement strut provides very high stability and safety to a supporting structure.

## Properties

- Material: Steel S235JR (material no. 1.0038) acc. to DIN EN 10025-2
- Zinc plating: electro zinc-plated

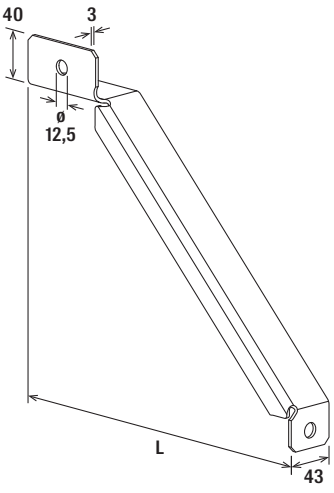


SAE

## Technical data

| Item | Item no. | Length L [mm] | Sales unit [pcs] |
|---|---|---|---|
| SAE 300 | 512114 | 300 | 10 |
| SAE 500 | 512115 | 500 | 10 |

# Threaded rod brace connector S-VA

Threaded rod brace connector S-VA with maximum installation flexibility for seismic bracing with threaded rods





Bracing of frame construction with threaded rods



## Applications

- For bracing of new as well as already installed frame constructions with threaded rods M10.
- For use in dry interior areas.

## Advantages

- The design of the threaded rod brace connector S-VA allows a variable fixation at angles between 30° and 60° for a flexible adaptation to new and already existing construction.
- The design of the bracing element allows easy and quick insertion of a pre-mounted threaded rod with nut.
- The possibility to mount two bracing elements on top of each other offers the option to clamp the same point in different directions.

## Properties

- Material bracket: steel S275JR (material no. 1.0044) acc. to DIN EN 10025-2
- Material supporting plate: steel S355MC (material no. 1.0976) acc. to DIN EN 10149-2
- Screw: M10x45, strength class 8.8, electro zinc-plated
- Nut: M10, strength class 8, electro zinc-plated

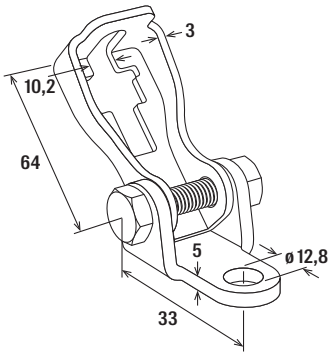


S-VA

## Technical data

| Item | Item no. | For profile | Sales unit [pcs] |
|---|---|---|---|
| S-VA | 552360 | FUS, FLS | 10 |

# Channel brace connector S-VB

Channel brace connector for seismic bracing of framework constructions with FUS channel profiles





Bracing of frame construction with channel profiles



## Applications

- For seismic bracing of new as well as already installed framework constructions with FUS channel profiles.
- For use in dry interior areas.

## Advantages

- The design of the channel brace connector S-VB allows a variable fixation at angles between 30° and 60° for a flexible adaptation to new and already existing construction.
- The lamellae bent upwards and downwards allow the easy installation of the channel profile to the channel brace connector.
- The possibility to mount two channel brace connectors on top of each other offers the option to clamp the same point in different directions.

## Properties

- Material bracket: steel S275JR (material no. 1.0044) acc. to DIN EN 10025-2
- Material supporting plate: steel S355MC (material no. 1.0976) acc. to DIN EN 10149-2
- Screw: M10x45, strength class 8.8, electro zinc-plated
- Nut: M10, strength class 8, electro zinc-plated

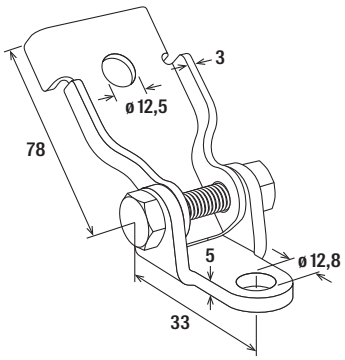


S-VB

## Technical data

| Item | Item no. | For profile | Sales unit [pcs] |
|---|---|---|---|
| S-VB | 552362 | FUS | 10 |

# 90° angle connector S-FAF

90° angle connector to connect two FUS channel profiles and install seismic bracing elements S-VA and S-VB





Connection of channel profiles and bracing elements



## Applications

- For the connection of channel profiles and the installation of bracing elements.
- For use in dry interior areas.

## Advantages

- Perforated wings allow an easy and quick installation of the brace connectors S-VA and S-VB on the angle connector S-FAF.
- The seismic angle connector allows an easy and flexible installation of the brace connectors S-VA and S-VB at different angles.

## Properties

- Material: steel S275JR (material no. 1.0044) acc. to DIN EN 10025-2
- Zinc plating: electro zinc-plated

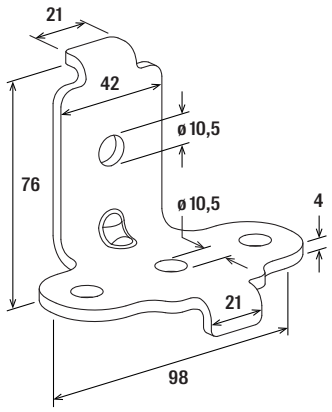


S-FAF

## Technical data

| Item | Item no. | For profile | Sales unit [pcs] |
|---|---|---|---|
| S-FAF | 552363 | FUS | 10 |

# Seismic wire cable system FWI-S

The wire cable system for securing installations from horizontal forces

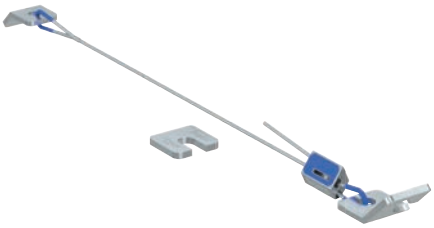



Lateral bracing of ventilation ducts



Four-way bracing of cable trays



## Applications

- Securing installations in buildings in the event of an earthquake, such as electrical cable routes, mechanical systems, ventilation ducts, hydraulic pipes.
- The FWI-S wire cable system ensures a safe transmission of the longitudinal and transversal forces into the subsurface and thus effectively prevents damage to installations.
- Also ideal for retrofitting existing installations.
- For use in dry interior areas.

## Advantages

- The system protects installations from damage caused by horizontal forces.
- The FWI-S wire cable system offers a safe and reliable method of bracing MEP installations to ensure their integrity during an earthquake.
- The FWI-S wire cable system can minimise damage to installations, resulting in lower repair costs and downtime.
- Easy installation thanks to pre-assembled sets in lengths of 2, 3 and 5 m.
- The available wire cable diameters of 2, 3 or 5 mm provides the right kit for your load case.
- Suitable for new buildings or for retrofitting. Each set has a retrofit plate that allows particularly easy installation into existing installations.
- Each set has a type-specific color marking for identification on the construction site.

## Properties

- Material wire cable lock: zinc-diecasting (material no. 2.2140.05)
- Material stamped and bent parts: steel (material no. 1.0038)
- Material wire cable: steel (material no. 1.5122)
- Material protective sleeve: PVC
- Corrosion protection: zinc lamella coating

## Installation FWI-SR / FWI-SB

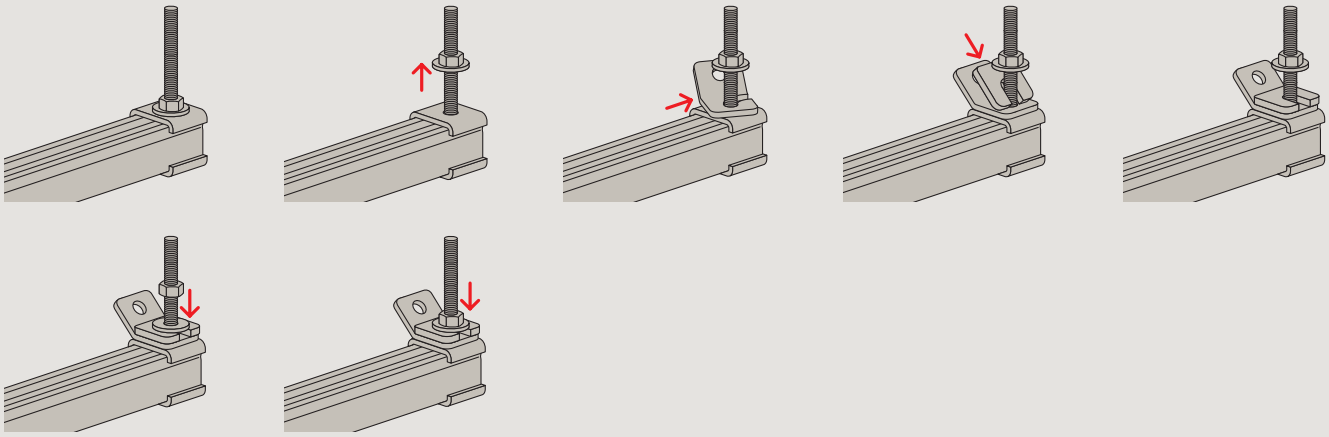



## Installation FWI-SGY

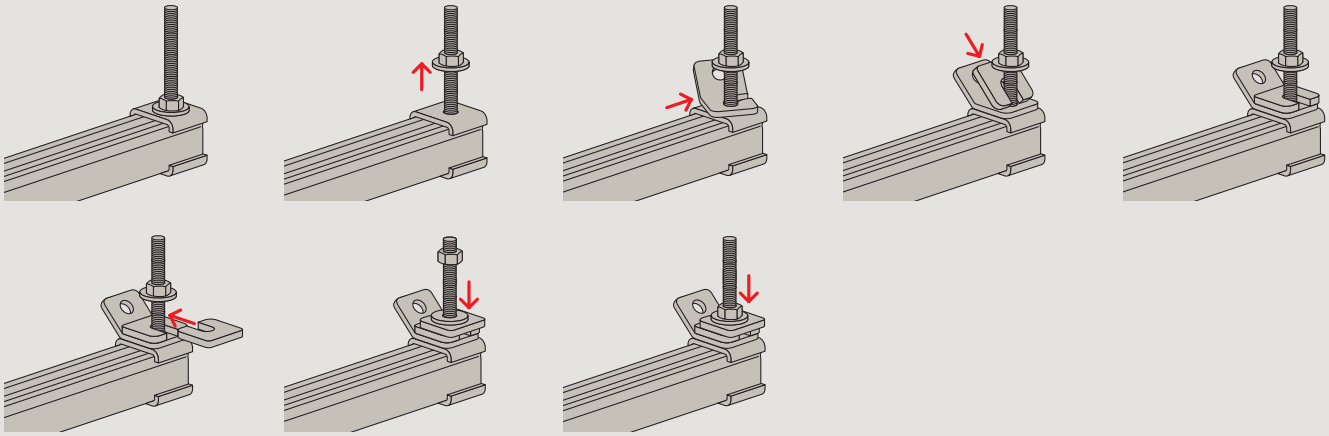

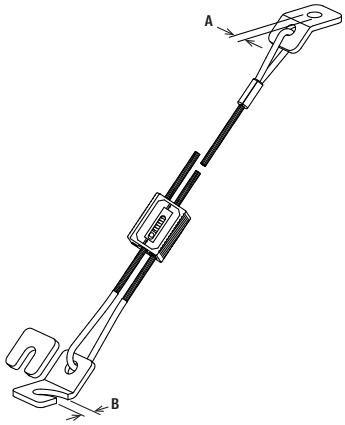


FWI-S

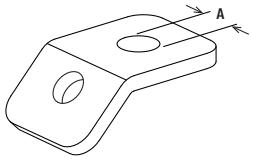


FWI-S anchor bracket

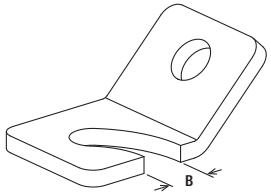


FWI-S retrofit bracket

## Technical data

| Item | Item no. | Cable length [m] | Wire-ø [mm] | Diameter anchor bracket A [mm] | Diameter retrofit bracket B [mm] | Max. recommended load $N_{rec}$ [kN] | Colour | Sales unit [pcs] |
|---|---|---|---|---|---|---|---|---|
| **FWI-SR-Kit 2.0 2m** | **569504** | 2 | 2.0 | 11.0 | 13.0 | 1.4 | red | 2 |
| **FWI-SR-Kit 2.0 3m** | **569505** | 3 | 2.0 | 11.0 | 13.0 | 1.4 | red | 2 |
| **FWI-SR-Kit 2.0 5m** | **569506** | 5 | 2.0 | 11.0 | 13.0 | 1.4 | red | 2 |

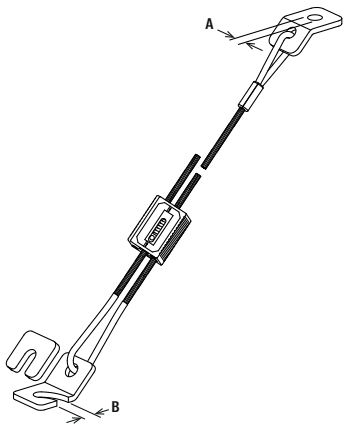


FWI-S

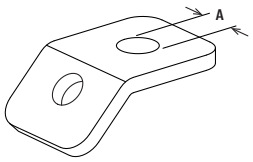


FWI-S anchor bracket

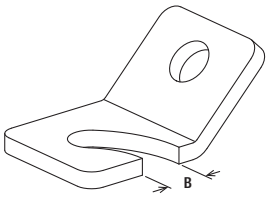


FWI-S retrofit bracket

7

## Technical data

| Item | Item no. | Cable length [m] | Wire-ø [mm] | Diameter anchor bracket A [mm] | Diameter retrofit bracket B [mm] | Max. recommended load $N_{rec}$ [kN] | Colour | Sales unit [pcs] |
|---|---|---|---|---|---|---|---|---|
| **FWI-SB-Kit 3.0 2m** | **569507** | 2 | 3.0 | 11.0 | 13.0 | 3.7 | blue | 2 |
| **FWI-SB-Kit 3.0 3m** | **569508** | 3 | 3.0 | 11.0 | 13.0 | 3.7 | blue | 2 |
| **FWI-SB-Kit 3.0 5m** | **569509** | 5 | 3.0 | 11.0 | 13.0 | 3.7 | blue | 2 |
| **FWI-SGY-Kit 5.0 2m** | **569510** | 2 | 5.0 | 13.0 | 13.0 | 8.5 | green / yellow | 2 |
| **FWI-SGY-Kit 5.0 3m** | **569511** | 3 | 5.0 | 13.0 | 13.0 | 8.5 | green / yellow | 2 |
| **FWI-SGY-Kit 5.0 5m** | **569512** | 5 | 5.0 | 13.0 | 13.0 | 8.5 | green / yellow | 2 |

## Accessories

**Seismic wire cable system FWI-S spare-kit**



FWI-S spare kit

| Item | Item no. | Contents | Sales unit [pcs] |
|---|---|---|---|
| **FWI-S spare kit** | **569513** | 1 x PVC hose red<br>1 x PVC hose blue<br>1 x PVC hose green/yellow<br>1 x Restraint washer<br>1 x Retrofit bracket | 1 |

# Threaded rod connector S-ROD

Threaded rod brace connector with increased angle adjustability to install threaded rods for seismic bracing




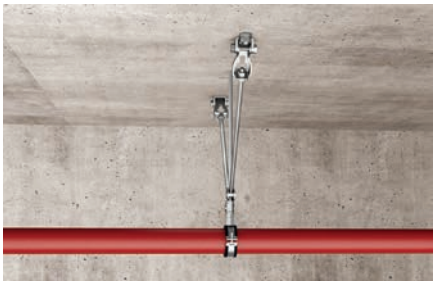

Bracing of pipeline with threaded rods



## Applications

- For the seismic bracing of suspended threaded rods as well as new and existing frame constructions with threaded rods M10.
- Suitable to attach to M8 and M10 rods.
- For use in dry interior areas.

## Advantages

- The design of the threaded rod brace connector allows a variable installation at angles between 30° and 60°.
- The threaded rod connector can be installed quickly and easily without having to dismantle already existing installations.
- By tilting the side rod by 90°, the threaded rod connector slides very easily, allowing easy and quick adjustment of the assembly height on the vertical threaded rod.
- The threaded rod connectors can be mounted on top of each other to brace the same point in different directions.

## Properties

- Material U-shaped brackets: steel S275JR (material no. 1.0044) acc. to DIN EN 10025-2
- Material threaded rod: steel 11SMnPb37 (material no. 1.0737) acc. to DIN EN 10277-3
- Zinc plating: electro zinc-plated

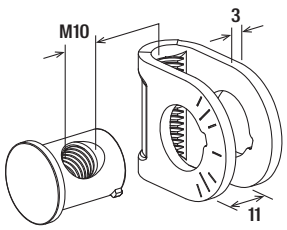


S-ROD

## Technical data

| Item | Item no. | | Sales unit [pcs] |
|---|---|---|---|
| S-ROD | 552361 | | 10 |

# Rod stiffener FTRC M12

Rod stiffener FTRC M12 for attaching strut channel to a threaded rod to accomodate compression loads



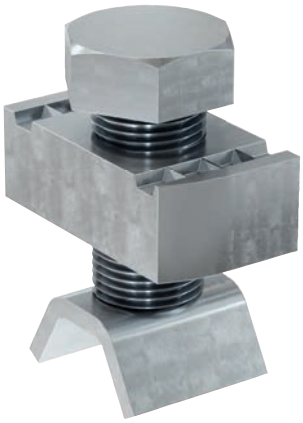

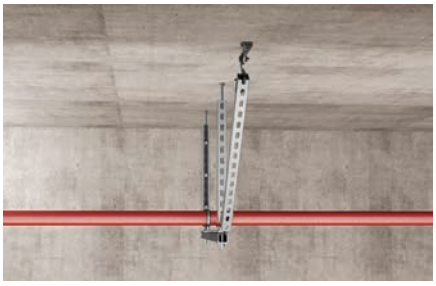

Rod stiffing for vertical seismic support

## Applications

- For the reinforcement of existing suspended constructions due to bracing of threaded rods M10 or M12 to FUS channel profiles.
- For attaching strut channel to a threaded rod to accommodate compression loads.
- For use in dry interior areas.

## Advantages

- The pronounced interlocking of the rod stiffeners gives a secure hold in the channel profile and holds the threaded rod in the desired position.
- The exact fit of the rod stiffeners enables quick and easy assembly.
- The assembly enables subsequent insertion in already installed channel profiles by 90° rotation.

## Properties

- Material: steel S235JR (material no. 1.0038) acc. to DIN EN 10025-2
- Zinc plating: electro zinc-plated

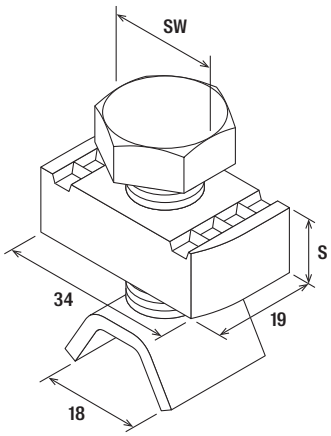


FTRC

## Technical data

| Item | Item no. | Thread M | Width across nut SW [mm] | Thickness S [mm] | Installation torque $T_{inst}$ [Nm] | Sales unit [pcs] |
|---|---|---|---|---|---|---|
| FTRC M12 | 547791 | M12 | 19 | 12.0 | 20 | 50 |

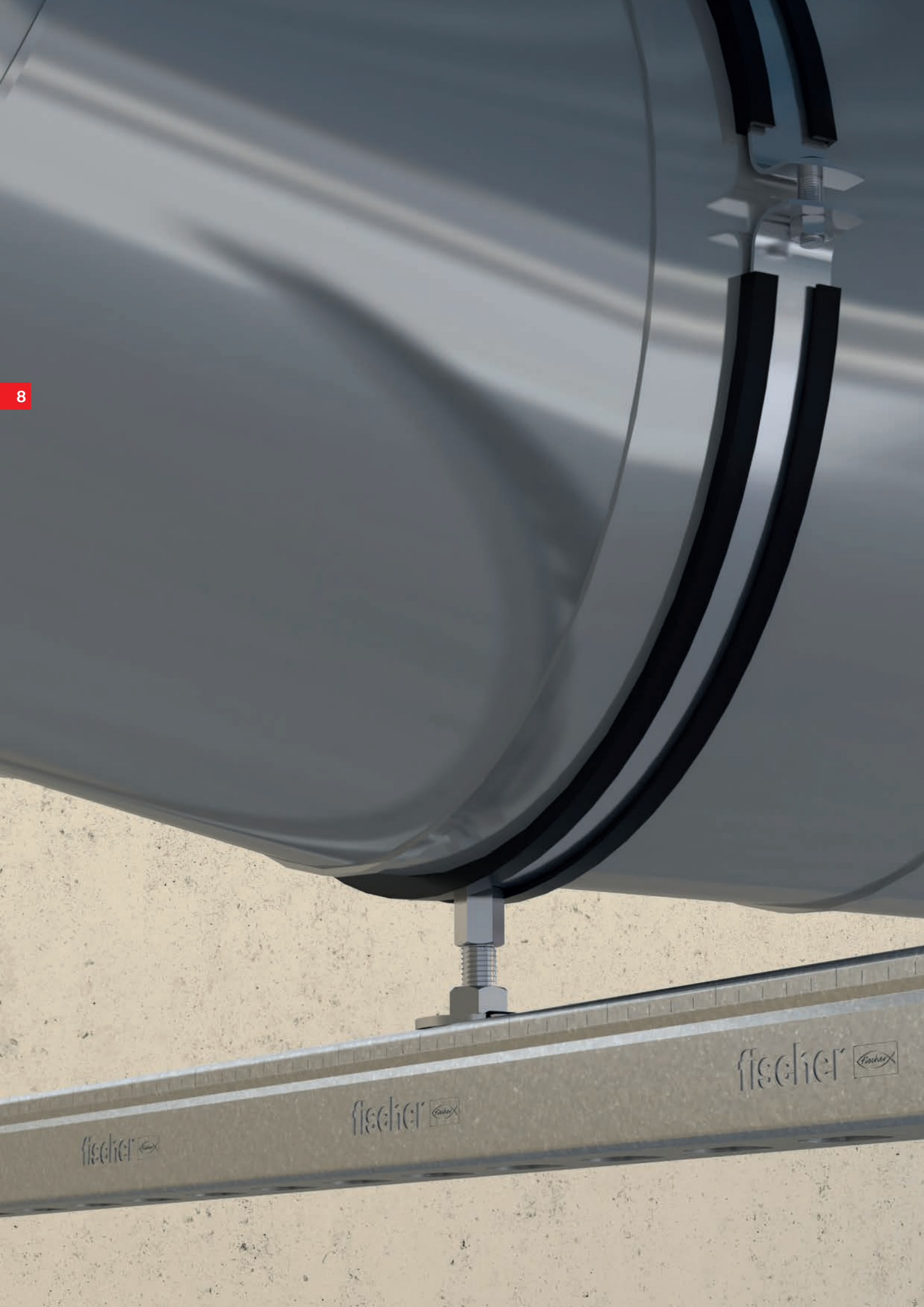
fischer
fischer
fischer

# 8

# Airduct and metal roof fixings


| | | |
|---|---|---|
| Ventilation duct clamp LGS | 244 |  |
| Ventilation duct clamp LGSN | 246 |  |
| Air duct hanger L- and Z-type | 248 |  |
| Spiral duct hanger LRB / LRBN | 250 |  |
| Ventilation duct connector VDC | 251 |  |
| Flat roof base FFRB | 252 |  |
| Profile hanger TZ / TZA / TZH / TZB / TZR | 255 |  |
| Toggle plug KDS | 257 |  |
| Hole punch LZ, hole stamp LST | 259 |  |
| Rubber inlay EMS | 260 |  |
| Profile connecting screw FPS-FPB | 261 |  |

# Ventilation duct clamp LGS

Clamps - Ventilation duct clamp LGS





Support systems for ventilation



Spiral airduct on cantilever



## Applications

- 2-screw-pipe clamp with sound insulation for fixing of spiral ducts.
- For use in dry interior areas.

## Advantages

- The large opening angle of the LGS enables a quick and easy installation.
- The LGS‘s two screws allow the adjustment to suit the outer pipe diameter.
- The sound insulation insert offers noise protection and prevents contact corrosion.
- The screw´s loss protection prevents loss of the locking screws during installation.
- Connection nut with combination thread M8/M10
- The LGS is drilled on both sides of the clamp from 450 mm diameter on. This allows for connection with two threaded rods with nuts. Thereby the recommended load of the clamp can be doubled.

## Properties

- Material: steel DC01 (material no. 1.330) acc. to DIN EN 10130
- Zinc plating: electro zinc-plated
- Connecting nut: resistance welded domed nut, M8 / M10, SW13
- Locking screw: oval head screw with combination recessed head
- Material sound insulation insert: SBR/ EPDM; chlorine-free; silicone-free
- Sound insulation: for DIN 4109
- Temperature range: -50 °C to +110 °C
- Hardness: 45 ± 5° Shore A
- Fire behaviour: DIN 4102: Class B2

## Installation LGS with connection nut

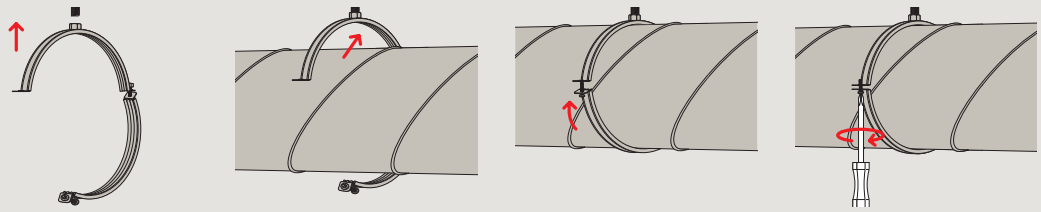

## Installation LGS with two threaded rods (for LGS ≥ 450mm)

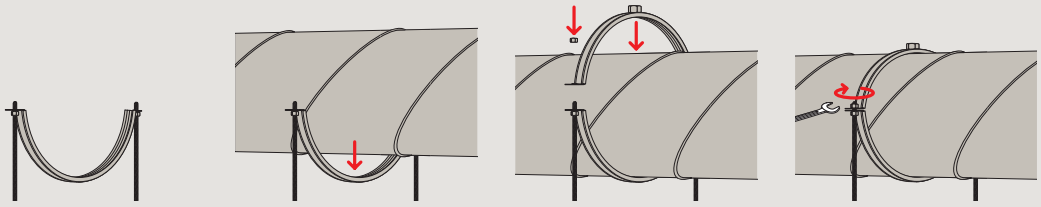

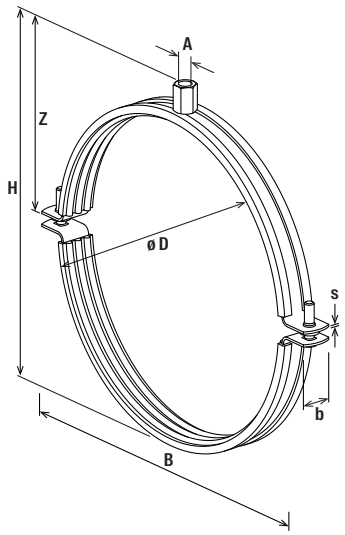


LGS



## Technical data

| Item | Item no. | Thread<br>A | Clamping range<br>D<br>[mm] | Height<br>H<br>[mm] | Height<br>Z<br>[mm] | Width<br>B<br>[mm] | Width x thickness clamp band<br>b x s<br>[mm] | Locking screw | Max. recom. static load (centr. tension)<br>[kN] | Installation torque<br>$T_{inst}$<br>[Nm] | Sales unit<br>[pcs] |
|---|---|---|---|---|---|---|---|---|---|---|---|
| LGS 80 | 079491 | M8 / M10 | 80 | 108 | 62 | 133 | 25 x 1.5 | M6 | 0.60 | 2 | 25 |
| LGS 90 | 079492 | M8 / M10 | 90 | 118 | 67 | 143 | 25 x 1.5 | M6 | 0.60 | 2 | 25 |
| LGS 100 | 079493 | M8 / M10 | 100 | 128 | 72 | 153 | 25 x 1.5 | M6 | 0.60 | 2 | 20 |
| LGS 112 | 079494 | M8 / M10 | 112 | 140 | 78 | 165 | 25 x 1.5 | M6 | 0.60 | 2 | 20 |
| LGS 125 | 079495 | M8 / M10 | 125 | 153 | 85 | 178 | 25 x 1.5 | M6 | 0.60 | 2 | 10 |
| LGS 140 | 079496 | M8 / M10 | 140 | 168 | 92 | 193 | 25 x 1.5 | M6 | 0.60 | 2 | 10 |
| LGS 150 | 079497 | M8 / M10 | 150 | 178 | 97 | 203 | 25 x 1.5 | M6 | 0.60 | 2 | 10 |
| LGS 160 | 079498 | M8 / M10 | 160 | 188 | 102 | 213 | 25 x 1.5 | M6 | 0.60 | 2 | 10 |
| LGS 180 | 079499 | M8 / M10 | 180 | 208 | 112 | 233 | 25 x 1.5 | M6 | 0.60 | 2 | 10 |
| LGS 200 | 079500 | M8 / M10 | 200 | 228 | 122 | 253 | 25 x 1.5 | M6 | 0.60 | 2 | 15 |
| LGS 224 | 079501 | M8 / M10 | 224 | 252 | 134 | 280 | 25 x 1.5 | M6 | 0.60 | 2 | 15 |
| LGS 250 | 079502 | M8 / M10 | 250 | 278 | 147 | 306 | 25 x 1.5 | M6 | 0.60 | 2 | 10 |
| LGS 280 | 079503 | M8 / M10 | 280 | 308 | 162 | 336 | 25 x 1.5 | M6 | 0.60 | 2 | 10 |
| LGS 300 | 079504 | M8 / M10 | 300 | 328 | 172 | 356 | 25 x 1.5 | M6 | 0.60 | 2 | 10 |
| LGS 315 | 079505 | M8 / M10 | 315 | 343 | 180 | 371 | 25 x 1.5 | M6 | 0.60 | 2 | 10 |
| LGS 355 | 079506 | M8 / M10 | 355 | 383 | 200 | 410 | 25 x 1.5 | M6 | 0.60 | 2 | 10 |
| LGS 400 | 079507 | M8 / M10 | 400 | 428 | 222 | 455 | 25 x 1.5 | M6 | 0.60 | 2 | 10 |
| LGS 450 | 024637[1)] | M8 / M10 | 450 | 480 | 248 | 510 | 25 x 2.5 | M10 | 0.80 | 5 | 1 |
| LGS 500 | 024638[1)] | M8 / M10 | 500 | 530 | 273 | 560 | 25 x 2.5 | M10 | 0.80 | 5 | 1 |
| LGS 560 | 024639[1)] | M8 / M10 | 560 | 590 | 303 | 620 | 25 x 2.5 | M10 | 0.80 | 5 | 1 |
| LGS 600 | 024640[1)] | M8 / M10 | 600 | 630 | 323 | 661 | 25 x 2.5 | M10 | 0.80 | 5 | 1 |
| LGS 630 | 542960[1)] | M8 / M10 | 630 | 660 | 338 | 691 | 25 x 2.5 | M10 | 0.80 | 5 | 1 |
| LGS 710 | 542962[1)] | M8 / M10 | 710 | 740 | 378 | 771 | 25 x 2.5 | M10 | 0.80 | 5 | 1 |
| LGS 800 | 024643[1)] | M8 / M10 | 800 | 831 | 424 | 861 | 25 x 3.0 | M10 | 0.80 | 5 | 1 |
| LGS 900 | 024644[1)] | M8 / M10 | 900 | 931 | 474 | 960 | 25 x 3.0 | M10 | 0.80 | 5 | 1 |
| LGS 1000 | 024645[1)] | M8 / M10 | 1,000 | 1.031 | 527 | 1.06 | 25 x 3.0 | M10 | 0.80 | 5 | 1 |
| LGS 1.120 | 024646[1)] | M8 / M10 | 1,120 | 1.151 | 584 | 1.183 | 25 x 3.0 | M10 | 0.80 | 5 | 1 |
| LGS 1.250 | 024647[1)] | M8 / M10 | 1,250 | 1.281 | 649 | 1.313 | 25 x 3.0 | M10 | 0.80 | 5 | 1 |

[1)] The installation with two threaded rods allows to double the given recommended loads.

# Ventilation duct clamp LGSN

LGSN without sound insulation insert





Support systems for ventilation



Spiral airduct on cantilever



## Applications

- 2-screw-pipe clamp without sound insulation for fixing of spiral ducts.
- For use in dry interior areas.

## Advantages

- The large opening angle of the LGSN enables a quick and easy installation.
- The LGSN‘s two screws allow the adjustment to suit the outer pipe diameter.
- The screw´s loss protection prevents loss of the locking screws during installation.
- Connection nut with combination thread M8/M10.
- The LGS is drilled on both sides of the clamp from 450 mm diameter on. This allows for connection with two threaded rods with nuts. Thereby the recommended load of the clamp can be doubled.

## Properties

- Material: steel DC01 (material no. 1.330) according to DIN EN 10130
- Zinc plating: electro zinc-plated
- Connecting nut: resistance welded domed nut, M8 / M10, SW13
- Locking screw: cross recessed pan-head screw M6 (up to size 400), hexagon screw with nut M10 (size 450 to 1250)
- Fire behaviour: DIN 4102: Class A1

## Installation LGSN with connection nut

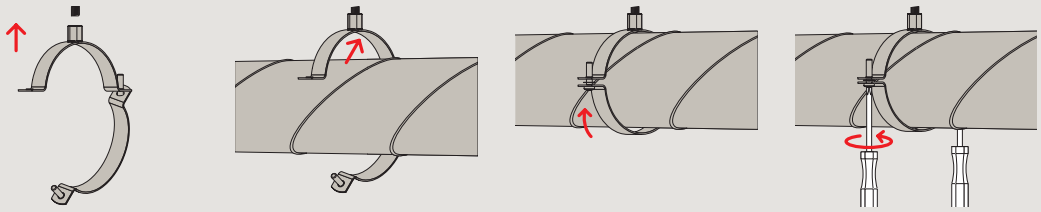

## Installation LGSN with two threaded rods (for LGSN ≥ 450mm)

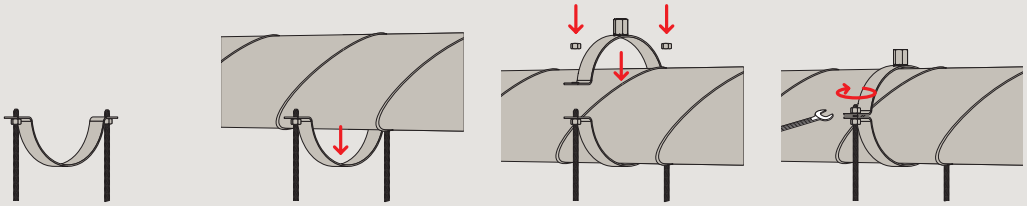

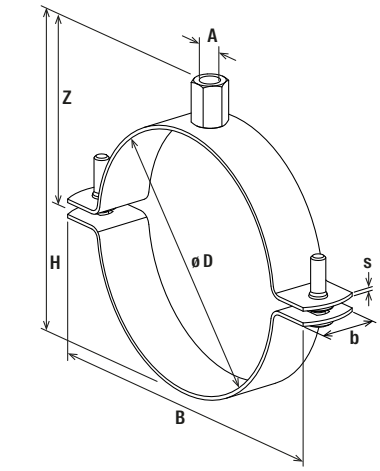


LGSN



## Technical data

| Item | Item no. | Thread<br>A | Clamping range<br>D<br>[mm] | Height<br>H<br>[mm] | Height<br>Z<br>[mm] | Width<br>B<br>[mm] | Width x thickness clamp band<br>b x s<br>[mm] | Locking screw | Max. recom. static load (centr. tension)<br>[kN] | Installation torque<br>$T_{inst}$<br>[Nm] | Sales unit<br>[pcs] |
|---|---|---|---|---|---|---|---|---|---|---|---|
| **LGSN 80** | **564518** | M8 / M10 | 80 | 100 | 59 | 125 | 25 x 1.5 | M6 | 0.60 | 2 | 25 |
| **LGSN 90** | **564519** | M8 / M10 | 90 | 110 | 64 | 135 | 25 x 1.5 | M6 | 0.60 | 2 | 25 |
| **LGSN 100** | **564520** | M8 / M10 | 100 | 120 | 69 | 145 | 25 x 1.5 | M6 | 0.60 | 2 | 20 |
| **LGSN 112** | **564521** | M8 / M10 | 112 | 132 | 75 | 157 | 25 x 1.5 | M6 | 0.60 | 2 | 20 |
| **LGSN 125** | **564522** | M8 / M10 | 125 | 145 | 81 | 170 | 25 x 1.5 | M6 | 0.60 | 2 | 10 |
| **LGSN 140** | **564523** | M8 / M10 | 140 | 160 | 89 | 185 | 25 x 1.5 | M6 | 0.60 | 2 | 10 |
| **LGSN 150** | **564524** | M8 / M10 | 150 | 170 | 94 | 195 | 25 x 1.5 | M6 | 0.60 | 2 | 10 |
| **LGSN 160** | **564525** | M8 / M10 | 160 | 180 | 99 | 205 | 25 x 1.5 | M6 | 0.60 | 2 | 10 |
| **LGSN 180** | **564526** | M8 / M10 | 180 | 200 | 109 | 225 | 25 x 1.5 | M6 | 0.60 | 2 | 10 |
| **LGSN 200** | **564527** | M8 / M10 | 200 | 220 | 119 | 245 | 25 x 1.5 | M6 | 0.60 | 2 | 15 |
| **LGSN 224** | **564528** | M8 / M10 | 224 | 244 | 131 | 272 | 25 x 1.5 | M6 | 0.60 | 2 | 15 |
| **LGSN 250** | **564529** | M8 / M10 | 250 | 270 | 144 | 298 | 25 x 1.5 | M6 | 0.60 | 2 | 10 |
| **LGSN 280** | **564530** | M8 / M10 | 280 | 300 | 159 | 328 | 25 x 1.5 | M6 | 0.60 | 2 | 10 |
| **LGSN 300** | **564531** | M8 / M10 | 300 | 320 | 169 | 348 | 25 x 1.5 | M6 | 0.60 | 2 | 10 |
| **LGSN 315** | **564532** | M8 / M10 | 315 | 335 | 176 | 362 | 25 x 1.5 | M6 | 0.60 | 2 | 10 |
| **LGSN 355** | **564533** | M8 / M10 | 355 | 375 | 196 | 402 | 25 x 1.5 | M6 | 0.60 | 2 | 10 |
| **LGSN 400** | **564534** | M8 / M10 | 400 | 420 | 219 | 447 | 25 x 1.5 | M6 | 0.60 | 2 | 10 |
| **LGSN 450** | **564535**[1)] | M8 / M10 | 450 | 472 | 245 | 502 | 25 x 2.5 | M10 | 0.80 | 5 | 1 |
| **LGSN 500** | **564536**[1)] | M8 / M10 | 500 | 522 | 270 | 552 | 25 x 2.5 | M10 | 0.80 | 5 | 1 |
| **LGSN 560** | **564537**[1)] | M8 / M10 | 560 | 582 | 300 | 612 | 25 x 2.5 | M10 | 0.80 | 5 | 1 |
| **LGSN 600** | **564538**[1)] | M8 / M10 | 600 | 622 | 320 | 653 | 25 x 2.5 | M10 | 0.80 | 5 | 1 |
| **LGSN 630** | **564539**[1)] | M8 / M10 | 630 | 652 | 335 | 683 | 25 x 2.5 | M10 | 0.80 | 5 | 1 |
| **LGSN 710** | **564540**[1)] | M8 / M10 | 710 | 732 | 375 | 763 | 25 x 2.5 | M10 | 0.80 | 5 | 1 |
| **LGSN 800** | **564541**[1)] | M8 / M10 | 800 | 823 | 420 | 853 | 25 x 3.0 | M10 | 0.80 | 5 | 1 |
| **LGSN 900** | **564542**[1)] | M8 / M10 | 900 | 923 | 470 | 952 | 25 x 3.0 | M10 | 0.80 | 5 | 1 |
| **LGSN 1000** | **564543**[1)] | M8 / M10 | 1,000 | 1.023 | 520 | 1.052 | 25 x 3.0 | M10 | 0.80 | 5 | 1 |
| **LGSN 1120** | **564544**[1)] | M8 / M10 | 1,120 | 1.143 | 580 | 1.175 | 25 x 3.0 | M10 | 0.80 | 5 | 1 |
| **LGSN 1250** | **564545**[1)] | M8 / M10 | 1,250 | 1.273 | 645 | 1.305 | 25 x 3.0 | M10 | 0.80 | 5 | 1 |

[1)] The installation with two threaded rods allows to double the given recommended loads.

# Air duct hanger L- and Z-type

Fastening components - Air duct hanger L- and Z-type





Airduct installation on steel beam with clamp hanger and ZKH



Air duct vertical installation utilising LKHS



## Applications

- Fastening component with sound-insulation for air ducts.
- For use in dry interior areas.

## Advantages

- The air duct hanger's sound-insulation element reduces the transfer of vibration and noise to the building.
- The multiple holes allow a quick and easy fastening with self-drilling screws or rivets.
- The center hole allows a simple alignment and height adjustment of the threaded rod.
- The LKHS enables stable vertical installation of ventilation ducts in conjunction with fischer cantilever arms FCA in riser shafts.

## Properties

- Material LKH/ZKH: steel DD11 (material no. 1.0332)
- Material LKHN/ZKHN: steel DC01 (material no. 1.0330)
- Material LKHS: steel S235JR (material no. 1.0038)
- Zinc plating: electro zinc-plated
- Sound insulation: EPDM/SBR

**See also:**



Product family Profile connecting screw
FPS-FPB Page 261

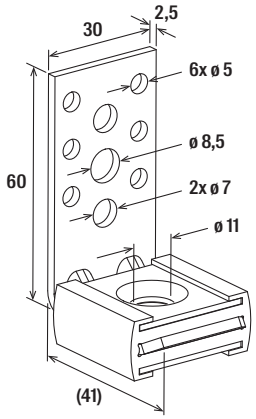


LKHN

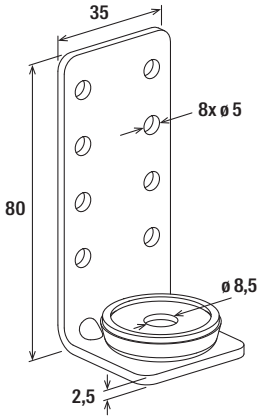


LKH

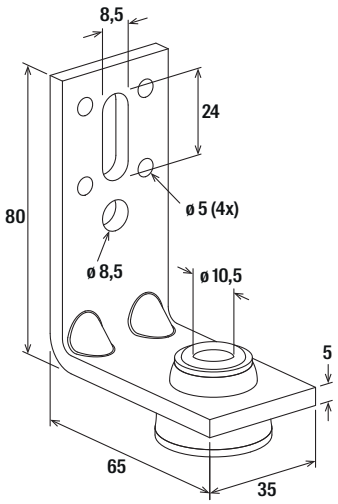


LKHS



## Technical data

| Item | Item no. | For thread | Max. recom. static load (centr. tension) $N_{rec}$ [kN] | Sales unit [pcs] |
|---|---|---|---|---|
| **LKHN** | **516537** | M8, M10 | 0.90 | 50 |
| **LKH** | **024671** | M8 | 0.50 | 50 |
| **LKHS** | **568672** | M8, M10 | 0.80 | 25 |

Note on LKHS: the maximum recommended load when using 4 LKHS reaches 3.20 kN.

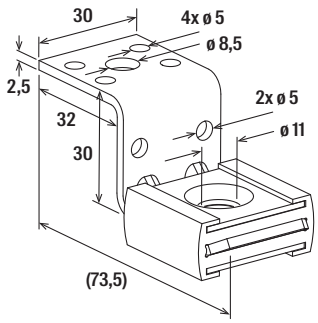


ZKHN

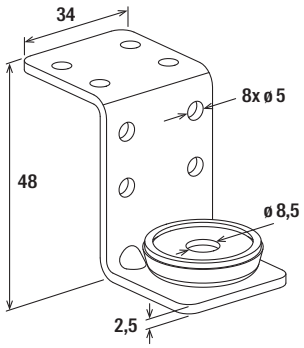


ZKH

## Technical data

| Item | Item no. | For thread | Max. recom. static load (centr. tension) $N_{rec}$ [kN] | Sales unit [pcs] |
|---|---|---|---|---|
| **ZKHN** | **516540** | M8, M10 | 0.90 | 50 |
| **ZKH** | **024674** | M8 | 0.50 | 50 |

# Spiral duct hanger LRB / LRBN

Fastening components - Spiral duct hanger LRB and LRBN





Spiral duct pipe with sound insulated hanger



## Applications

- Fastening component with sound-insulation for spiral ducts.
- For use in dry interior areas.

## Advantages

- The multiple holes on the duct hangers allow a quick and easy fastening with self-drilling screws or rivets.
- The duct hangers sound-insulation element reduces the transfer of vibration and noise.
- The center hole in the duct hangers allows the simple alignment and height adjustment of the threaded rod.
- The riveted version gives the ceiling hanger increased stability.

## Properties

- Material LRB: steel DD11 (material no. 1.0332) acc. to DIN EN 10111
- Material LRBN: steel S235JR (material no. 1.0038) acc. to DIN EN 10025
- Zinc plating: electro zinc-plated
- Sound insulation: for DIN 4109
- Temperature range: -50 °C to +110 °C
- Hardness: 45 ± 5° Shore A
- Fire behaviour: DIN 4102: Class B2

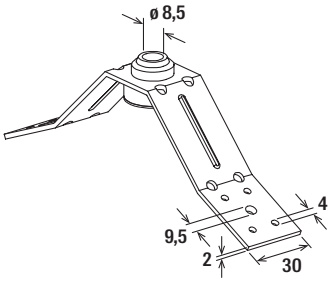


LRB

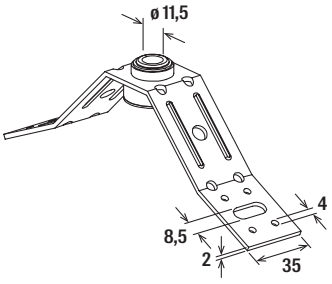


LRBN

## Technical data

| Item | Item no. | For thread | Max. recom. static load (centr. tension) [kN] | Sales unit [pcs] |
|---|---|---|---|---|
| **LRB** | **024675** | M8 | 0.50 | 50 |
| **LRBN** | **077613** | M8, M10 | 0.90 | 50 |

**See also:**



Product family Profile connecting screw
FPS-FPB Page 261

# Ventilation duct connector VDC

Connecting elements - Ventilation duct connector VDC

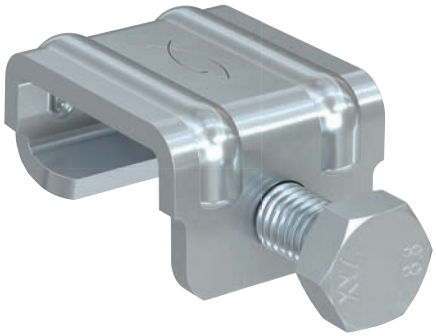



Flange connection of two rectangular ducts



## Applications

- Ventilation duct connector VDC for simple flange connection of large duct cross-sections and/or high pressure conditions.
- For use in dry interior areas.

## Advantages

- Easy to use.
- No drilling.
- High clamping effect.
- Ensures a firm connection of ducts.
- Reduces pressure losses in the ventilation duct systems.
- Reduces noise in the ventilation duct system.

## Properties

- Material: steel DD11 (material no. 1.0332) acc. to DIN EN 10111
- Zinc plating: electro zinc-plated

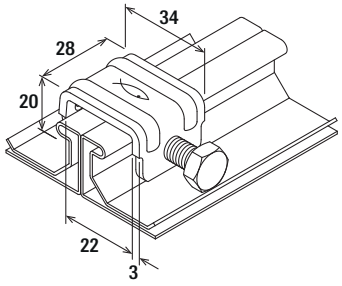


VDC

## Technical data

| Item | Item no. | Bolt<br>ø x length | Rec. installation distance<br>[mm] | Sales unit<br>[pcs] |
|---|---|---|---|---|
| **VDC** | **568675** | M8 x 20 | 200 - 300 | 50 |

For ventilation ducts with a side length of less than 800 mm, place a connector in the middle of each side.

# Flat roof base FFRB

Flat roof base - Secure and variable thanks to tolerance compensation

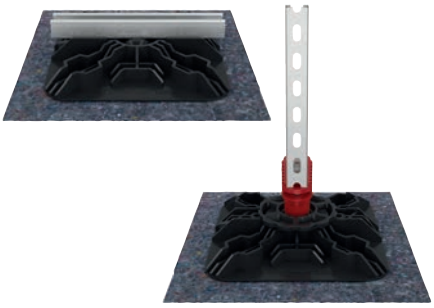

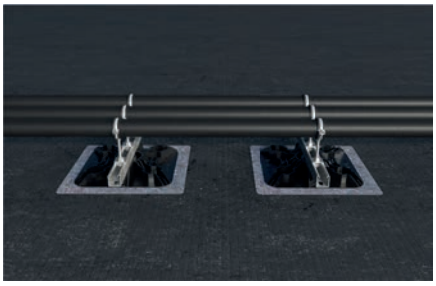

Pipelines and pipeline routes

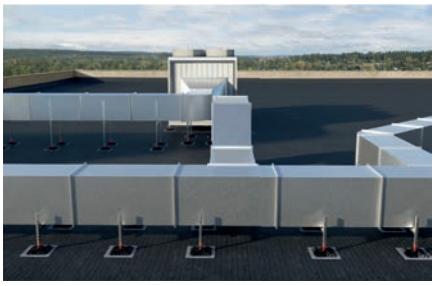

Ventilation systems and ventilation ducts



## Applications

- Pipelines and cable trays on flat roofs
- Ventilation ducts and pipes on flat roofs
- Air conditioning systems, heat exchangers and cooling towers, etc. on flat roofs
- Maintenance platforms, walkways and bridges
- Solar thermal or photovoltaic systems
- Protecting membrane roofs
- Wind safety attachments
- Durability test for the application, tested according to EOTA TR 024: 2019-08. Test report No. 904 1349 000/STÄ

## Advantages

- The fischer flat roof base ensures optimal weight distribution and reduces point loads on flat roofs, protecting against defect and recourse claims.
- The system fit with the proven FUS channel system in hot-dip galvanised steel ensures economical installation.
- The material of the base plate enables weather-resistant, durable and secure fixing of supports on flat roofs.
- The protective fibre fleece FFRP protects synthetic roofs or bitumen waterproofing membranes, and effectively prevents damage or penetration of the membrane.
- The handwheel of the flat roof base FFRBH allows for continuous adjustment of the tilt angle up to 12° and reduces the installation effort in the long term, as no further accessories are required.
- The swivel-mounted base of the flat roof base FFRBH enables a 360° rotation of the FUS channel. This allows the flat roof base to be placed in any position.

## Properties

Material FFRB / FFRBH:
- PP HD GF30%
- nut stainless steel A2, DIN 6330
- nut stainless steel A2, DIN 934
- disc spring: stainless steel A2, DIN 2093

Material LKS:
- stainless steel A2, DIN 933

Material FFRP:
- polyester fibre fleece 300 g/m²

Material FFRBB:
- concrete

## Installation FFRB

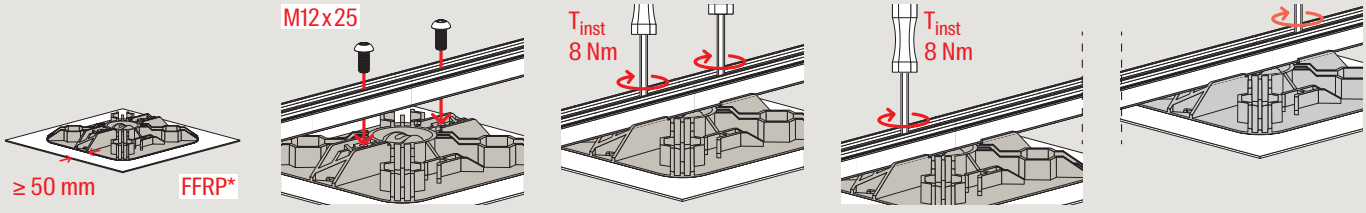

## Installation FFRBH

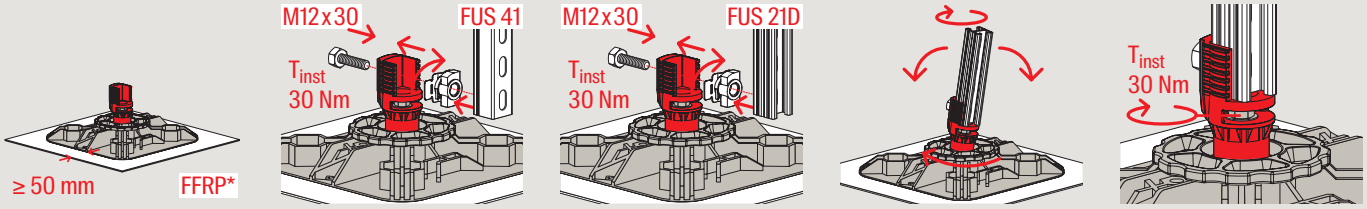


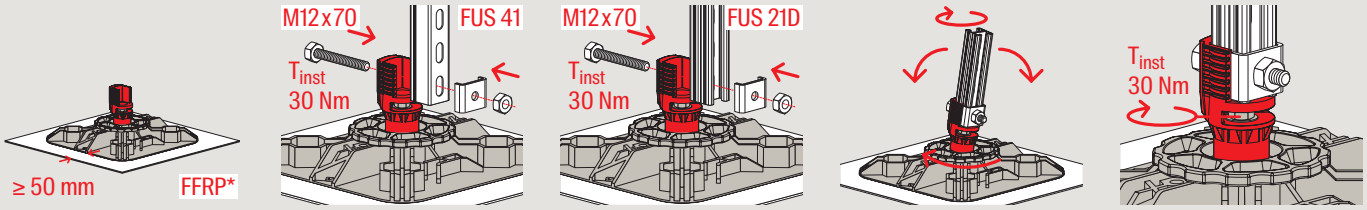


## Installation FFRBB

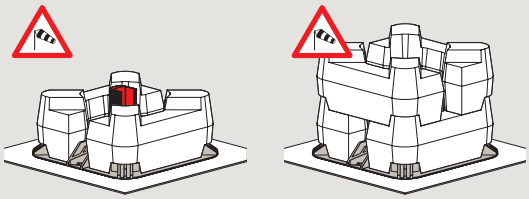

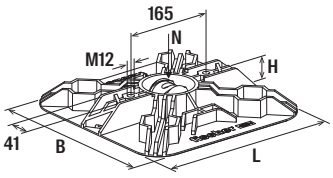


FFRB

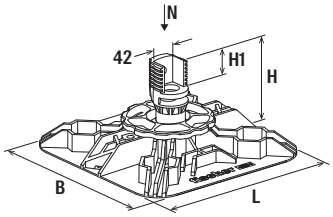


FFRBH

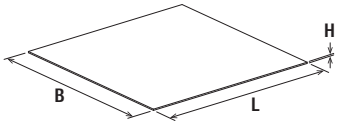


FFRP

## Technical data

| | Item no. | Length L [mm] | Width B [mm] | Height H [mm] | Height 1 H1 [mm] | Installation torque $T_{inst}$ [Nm] | Max. recommended static load (upright) $N_{rec}$ [kN] | Weight packaging unit [kg] | Sales unit [pcs] |
|---|---|---|---|---|---|---|---|---|---|
| **Item** | | | | | | | | | |
| **FFRB Flat roof base standard** | **559127** | 340 | 340 | 52 | – | 40 | 20.0 | 3.285 | 2 |
| **FFRBH Flat roof base hinged** | **559128** | 340 | 340 | 168 | 50 | 40 | 20.0 | 4.255 | 2 |
| **FFRP Flat roof base protector** | **559129** | 450 | 450 | 3 | – | – | – | 0.870 | 10 |

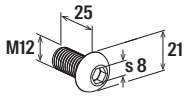


LKS

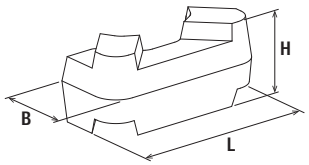


FFRBB

## Technical data

| Item | Item no. | Length<br>l<br>[mm] | Width<br>B<br>[mm] | Height<br>H<br>[mm] | Weight packaging unit<br>[kg] | Sales unit<br>[pcs] |
|---|---|---|---|---|---|---|
| **LKS M12x25 A2** | **559972** | 25 | – | – | 1.460 | 50 |
| **FFRBB flat roof base ballast** | **559130** | 330 | 135 | 150 | 8.000 | 1 |

# Profile hanger TZ / TZA / TZH / TZB / TZR

Metal ceiling hanger - Profile hanger TZ / TZA / TZH / TZB / TZR





Sprinkler pipe installation to trapezoidal metal sheet



Ventilation duct on trapezoidal sheet



## Applications

- Fixing element for trapezoidal sheets (available in five versions).
- For application in sprinkler systems TZ, TZH and TZA need to be fastened with a hex bolt through the punched hole.
- For non sprinkler applications the hangers can be fixed to the metal sheet using self drilling screws or blind rivets
- For use in dry interior areas.

## Certificates

FM APPROVED

VdS

## Advantages

- The VdS approval for TZ/TZH and the FM approval for the TZA guarantee independently tested safety.
- The TZH's adjustable nut allows a simple, post-installation height adjustment.
- The predetermined bending point of the TZ/TZH/TZA enables ideal adaptation to the trapezoidal sheet shape.
- The TZR reduces the noise emission in the building by using a sound insulation element.
- The TZB is a cost-effective alternative for standard non-approved applications for use with threaded rods and nuts.

## Properties

- Material TZ/TZA: steel DD11
- Material TZH: steel DX51D+Z140-275
- Material TZB/TZR: Q235B
- Zinc plating: electro zinc-plated

## Installation for use in sprinkler systems TZ/TZH/TZA

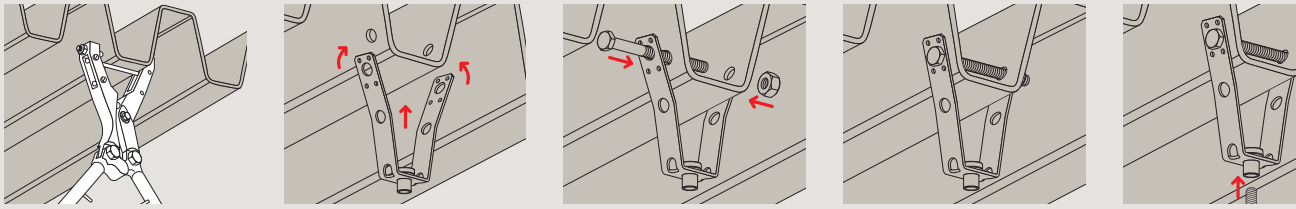

## Other installations

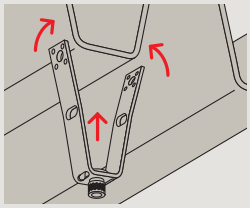
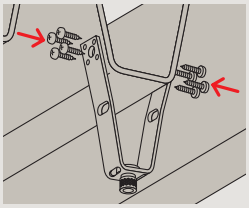
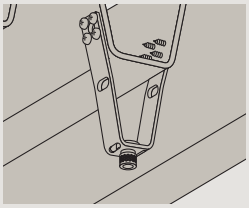
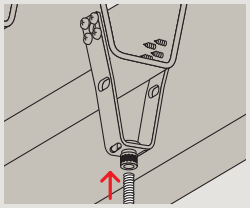



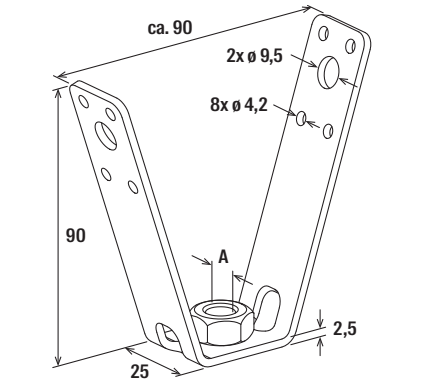


TZ

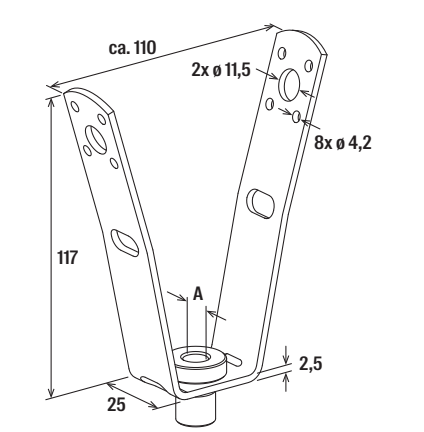


TZH

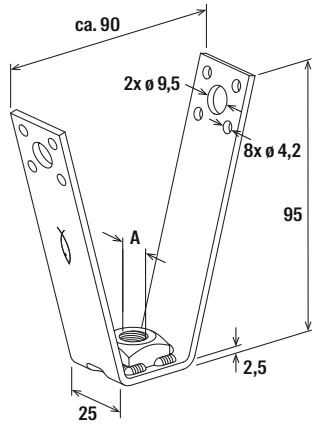


TZA

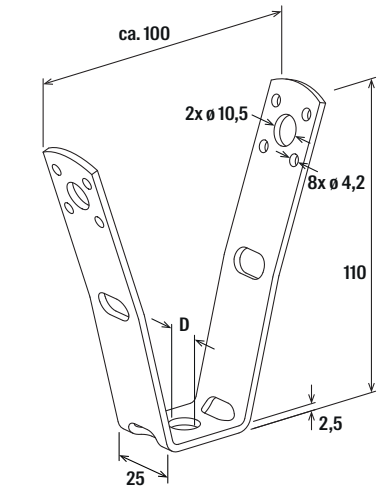


TZB

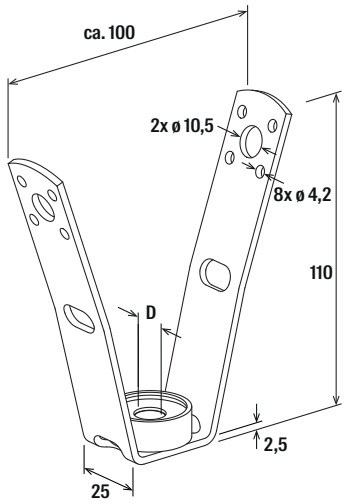


TZR

## Technical data

| Item | Item no. | VdS approval | FM approval | Thread A | Hole-Ø D [mm] | Max. recom. static load (centr. tension) $N_{rec}$ [kN] | Sales unit [pcs] |
|---|---|---|---|---|---|---|---|
| **TZ M8** | **064094** | Yes | – | M8 | – | 3.00 | 25 |
| **TZ M10** | **064095** | Yes | – | M10 | – | 3.00 | 25 |
| **TZA M10** | **524047** | – | Yes | M10 | – | 3.00 | 50 |
| **TZH M8** | **079825** | Yes | – | M8 | – | 4.00 | 25 |
| **TZH M10** | **079826** | Yes | – | M10 | – | 4.00 | 25 |
| **TZB ø10.5** | **568674** | – | – | – | 10.5 | 3.00 | 50 |
| **TZR ø10.5** | **568673** | – | – | – | 10.5 | 3.00 | 50 |

The load values do not consider the maximum allowable load of the trapezoidal metal sheet.

# Toggle plug KDS

Toggle plug KDS for secure fixing of pipes to trapezoidal metal sheet ceilings in stationary sprinkler systems






Sprinkler pipe on trapezoidal sheet metal ceiling



## Applications

- The completely pre-assembled toggle plug KDS is used as a fixing element on trapezoidal metal ceilings.
- Suitable e.g. for fixing pipelines, mounting channels, ventilation ducts, power lines and lighting systems.
- Attachment of sprinkler pipelines to trapezoidal metal sheets: from ¾ to 1 ½“ inch according to FM, max DN 50 (2“) according to VdS.
- The permissible tensile load per fastening point for sprinkler lines on trapezoidal sheets is 0.8 kN, for other fastenings it is 1.0 kN.
- For use in dry interior areas.

## Advantages

- The entire KDS range has VdS approval. The KDS 10 also has FM approval. This means that the KDS toggle plug guarantees objectively tested functional safety for use in sprinkler systems.
- Available in lengths from 100 to 500 mm (KDS 8) and 100 to 200 mm (KDS 10).
- The rotatable threaded rod allows easy height adjustment within the trapezoidal sheet. The threaded rod is secured against unintentional unscrewing.
- Complete with threaded rod, nut, washer, sealing washer and load distribution block. The sealing washer ensures a reliable seal on the trapezoidal metal sheet .

## Properties

- Material: galvanised steel
- Material sealing washer: polyolefin-elastomere TPE-O
- Zinc plating: electro zinc-plated

## Certificates

FM APPROVED

VdS

## Installation KDS

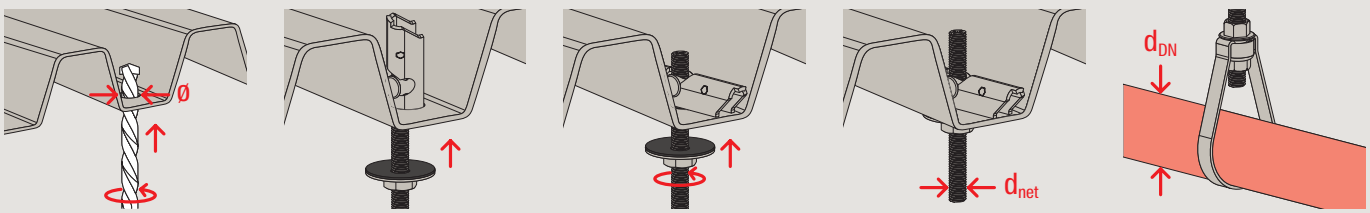

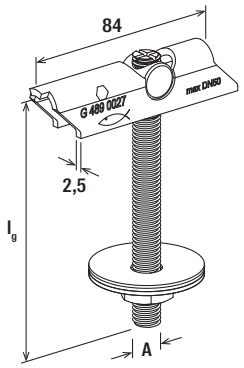


KDS

## Technical data

8

| | Item no. | Thread<br>A | Thread length<br>$l_g$ [mm] | For sprinkler pipes acc. to VdS | dnet VdS | For sprinkler pipes acc. to FM | dnet FM | Drill hole Ø<br>[mm] | Permissible tension load acc. to VdS/FM on trapezoidal metal sheet ≥ 0.63mm<br>[kN] | Permissible tension load for non-VdS/FM rel. applications on trap. metal sheet*<br>[kN] | Max. recom. static load (centr. tension)<br>$N_{rec}$ [kN] | Sales unit<br>[pcs] |
|---|---|---|---|---|---|---|---|---|---|---|---|---|
| **Item** | | | | | | | | | | | | |
| **KDS 8x100** | **563859** | M8 | 100 | ≤ DN 50 (2“) | M8 | – | – | 22 | 0.8 | 1 | 8.00 | 50 |
| **KDS 8x200** | **563860** | M8 | 200 | ≤ DN 50 (2“) | M8 | – | – | 22 | 0.8 | 1 | 8.00 | 25 |
| **KDS 8x300** | **563861** | M8 | 300 | ≤ DN 50 (2“) | M8 | – | – | 22 | 0.8 | 1 | 8.00 | 25 |
| **KDS 8x500** | **563862** | M8 | 500 | ≤ DN 50 (2“) | M8 | – | – | 22 | 0.8 | 1 | 8.00 | 25 |
| **KDS 10x100** | **563863** | M10 | 100 | ≤ DN 50 (2“) | M10 | DN 20 to DN 40 (¾“ to 1½“) | M10 | 25 | 0.8 | 1 | 8.50 | 25 |
| **KDS 10x200** | **563864** | M10 | 200 | ≤ DN 50 (2“) | M10 | DN 20 to DN 40 (¾“ to 1½“) | M10 | 25 | 0.8 | 1 | 8.50 | 25 |

* Note on the maximal recommended static load (centric tension): Please consider the permissible load capacity of the trapezoidal metal sheet.

# Hole punch LZ, hole stamp LST

Hole punch for punching trapezoidal sheet roofs





## Applications

- Tool for punching holes in trapezoidal metal sheets.

## Advantages

- The hole punch LZ enables easy handling during use.
- Thanks to the long lever, only a little force is required to use it.
- The hole stamp LST can be replaced if it shows signs of wear.

## Properties

- Usable for trapezoidal metal sheets with max. width of 100 mm.
- Max. sheet thickness 1,25 mm.
- Hole punch diameter 10 mm.
- Adjustable depth stop for accurate adjustment.
- Stamp with ejector springs for easy ejection of stamps from metal sheet.
- Rubber handles for better grip.
- Long lever and hinges for better power transmission.

## Technical data

| Item | Item no. | Max. sheet thickness [mm] | Hole punch diameter [mm] | Opening width [mm] | Sales unit [pcs] |
|---|---|---|---|---|---|
| LZ | 079830 | 1.25 | 10 | 100 | 1 |

## Hole stamp LST



LST

| Item | Item no. | Hole punch diameter [mm] | Sales unit [pcs] |
|---|---|---|---|
| LST 10 | 079829 | 10 | 2 |

# Rubber inlay EMS

Fastening components - Rubber inlay EMS



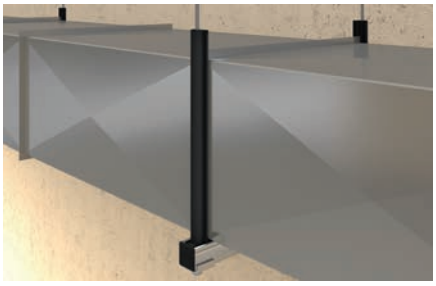

Airduct with sound insulation on installation channel



## Applications

- Profile rubber to insert in channels.
- Sound insulation of large ducting.
- EMS 31 suitable for FLS channels, EMS 41 suitable for FUS channels.

## Advantages

- The channel rubber EMS provides sound insulation between components.
- The design of the rubber EMS allows it to be used in channels and threaded rods.

## Properties

- Material sound insulation: SBR/EPDM chlorine-free and silicone-free
- Sound insulation: special noise-absorbing lining
- Temperature range: -50 °C to +110 °C
- Hardness: 45 ± 5° Shore A
- Fire behaviour: DIN 4102: Class B2

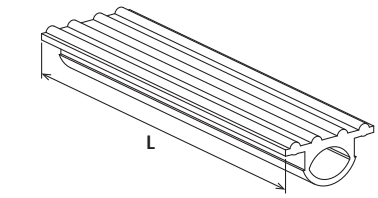


EMS

## Technical data

| Item | Item no. | For profile | Length [m] | Sales unit [pcs] |
|---|---|---|---|---|
| **EMS 31** | **538752** | all FLS channels | 25 | 1 |
| **EMS 41** | **550806** | all FUS channels | 6 | 1 |

# Profile connecting screw FPS-FPB

The profile connection screw with mushroom head, drill point and PH cross drive

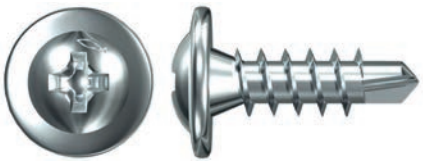



Suspended pipes on trapezoid roof



## Applications

- Suitable for fastening duct hangers and spiral duct hangers to air ducts and spiral air ducts.
- For use in dry interior areas.

## Advantages

- The screw is self drilling and does not require a drilling machine.

## Properties

- Material: steel
- Zinc plating: electro zinc-plated

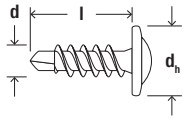


FPS-FPB

## Technical data

| Item | Item no. | Diameter d [mm] | Head-ø $d_h$ [mm] | Length l [mm] | Drive | Sales unit [pcs] |
|---|---|---|---|---|---|---|
| **FPS-FPB 4.2 x 13 ZPF 1000** | **040457** | 4.2 | 9.6 | 13 | PH2 | 1000 |

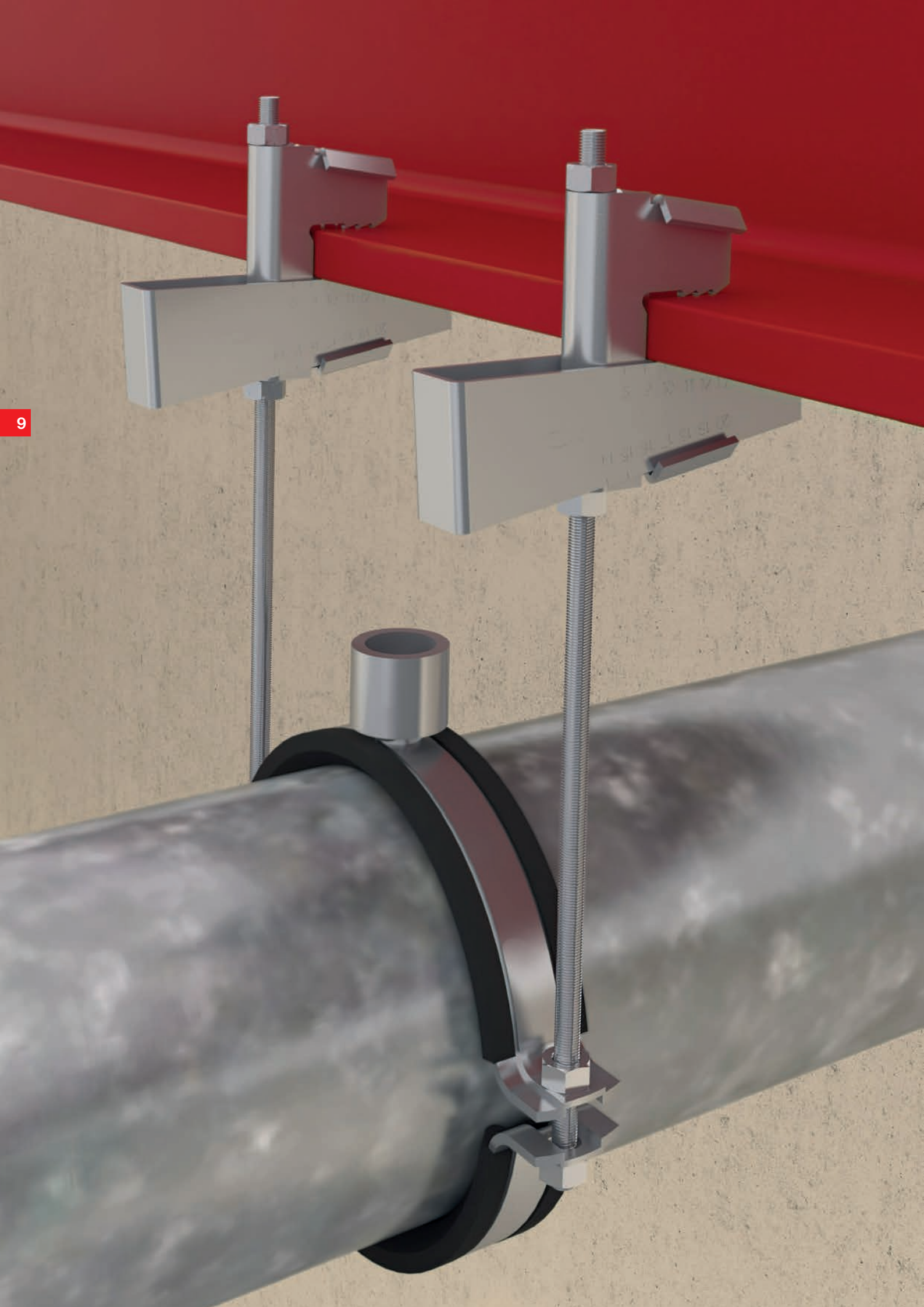

# 9 Accessories


| | | |
|---|---|---|
| Beam clamp TKL | 264 |  |
| Beam clamp TKLS | 266 |  |
| Swivel beam clamp TKLG | 268 |  |
| Threaded rod G | 271 |  |
| Threaded stud GS | 273 |  |
| Base plates GPL / GPS / GPSR / GPR | 275 |  |
| Stud screw STST with TX star recess | 277 |  |
| Support hanger AHB | 279 |  |
| Multi connector MW | 280 |  |
| Parallel connector PV | 281 |  |
| Double connector plate DPP, DPF | 283 |  |
| Bolt connector SBB | 284 |  |
| Turnbuckle SPS, Bolt left-hand/right-hand BLR | 285 |  |
| Hexagonal screw SKS | 286 |  |
| Cylindrical head screw ZKS | 287 | 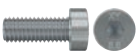 |
| Washer U | 288 |  |
| Hexagonal nut MU | 289 |  |
| Hexagonal connector VM | 290 |  |

| | | |
|---|---|---|
| Eyebolt AG | 291 |  |
| Thread hanger RAH | 292 |  |
| Reduction piece RD | 293 |  |
| Reduction socket RDM and GRD | 294 |  |
| Flat eye screw LLS | 295 |  |
| Textile web strapping GWB | 296 |  |
| Perforated steel banding LBV/LBK | 297 |  |
| Impact nail ED | 299 |  |
| Setting tool SZE | 300 |  |

# Beam clamp TKL

Clamp hanger TKL - the easy fixing solution without welding and drilling

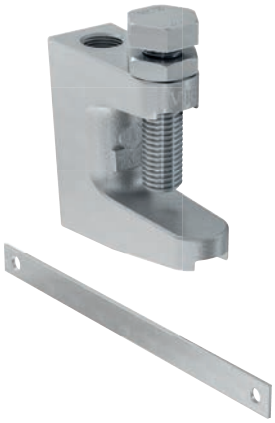



Heavy drainage pipe on beam clamp



## Applications

- Clamp hangers allow for simple fixing by clamping direct to steel girders.
- Retaining straps SS-TKL are required for VdS equipment over Ø 65 mm.
- For use in dry interior areas.

## Certificates

FM APPROVED

VdS

UL

## Advantages

- The TKL design with its clamping screw allows for fixing to steel girders without the need for welding and drilling.
- The design of the clamping screw prevents it from slipping from the steel girder.
- VdS/FM/UL certificates guarantee independently tested safety.
- The solid TKL design guarantees a high load-bearing capacity.
- The TKL with thread mount guarantees quick and easy installation.
- The TKL with through-hole allows for height adjustment after installation.

## Properties

- Material TKL: malleable cast iron EN-GJMB-350-10 acc. to DIN 1562
- Material bolt: steel 8.8 acc. to ISO 4017
- Material nut: steel acc. to ISO 4035, strength category 4
- Material SS-TKL: steel DX51D (material no. 1.0226) acc. to EN 10214
- Zinc plating: electro zinc-plated

## Installation TKL

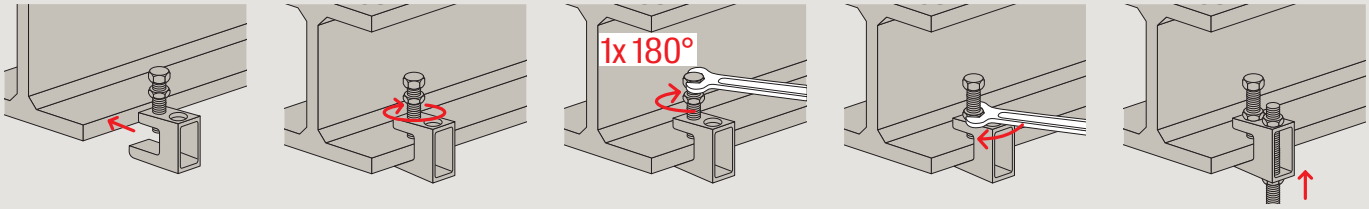

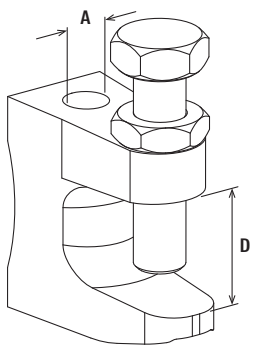


TKL

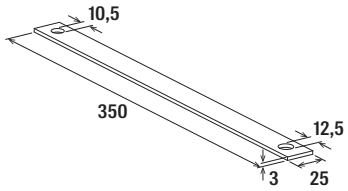


SS-TKL

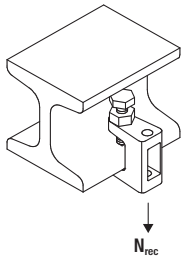


## Technical data

| Item | Item no. | VdS approval | FM approval | UL approval | Clamping range D [mm] | Thread A | Max. recom. static load (centr. tension) $N_{rec}$ [kN] | Sales unit [pcs] |
|---|---|---|---|---|---|---|---|---|
| **TKL L M 8** | **064055** | Yes | – | – | 0 - 18 | M8 | 1.20 | 50 |
| **TKL M 8** | **079687** | Yes | – | – | 0 - 23 | M8 | 2.50 | 50 |
| **TKL L Ø 9** | **077605** | Yes | – | – | 0 - 18 | Ø 9 | 1.20 | 50 |
| **TKL M10** | **079688** | Yes | Yes | Yes | 0 - 20 | M10 | 2.50 | 50 |
| **TKL Ø 11** | **079689** | Yes | Yes | Yes | 0 - 20 | Ø 11 | 2.50 | 50 |
| **TKL M12** | **020949** | Yes | Yes | Yes | 0 - 26 | M12 | 3.50 | 50 |
| **TKL Ø 13** | **043275** | Yes | Yes | Yes | 0 - 26 | Ø 13 | 3.50 | 50 |
| **SS-TKL M10/M12** | **048154** | Yes | – | – | – | Ø 10 / Ø 12 | – | 25 |

# Beam clamp TKLS

Clamp hangers for easy fixing to steel girders with just one tool

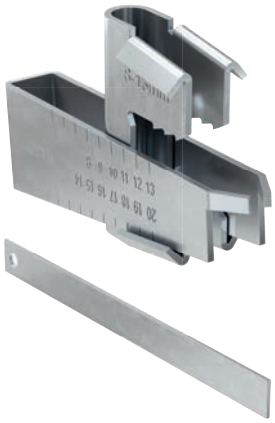



Heavy steel pipe suspended on steel beam



## Applications

- All kind of fixings by threaded rods to steel beams with sloping flange plate up to 14%.
- Retaining straps SS-TKLS are required for VdS equipment over Ø 65 mm.
- For use in dry interior areas.

## Certificates / Features

FM APPROVED

VdS

## Advantages

- The TKLS design with hammering wedge allows fixing to steel beams without the need of welding and drilling.
- The teeth of the TKLS effectively prevent from slipping off the steel beam.
- VdS and FM approval guarantees objectively tested functional safety.
- The TKLS made of steel guarantees highest load-bearing capacity.
- The TKLS allows pre-assembling of threaded rods and for retrospective height adjustment.

## Properties

- Material TKLS: steel HX420LAD+ZAD (material no. 1.0935) acc. to DIN EN 10346
- Material SS-TKLS: steel DX51D (material no.1.0226) acc. to EN 10214
- Zinc plating: electro zinc-plated

## Installation TKLS

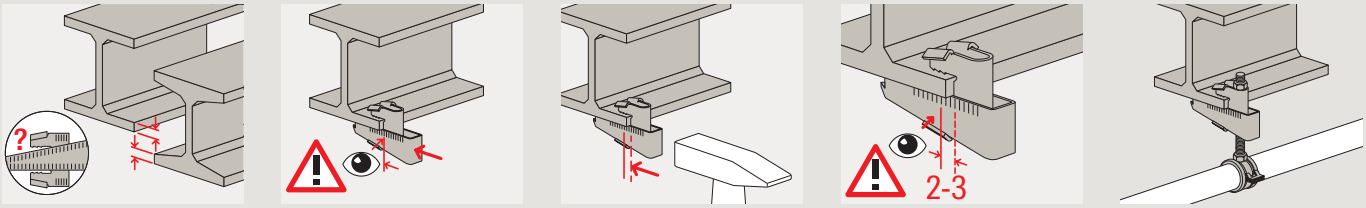

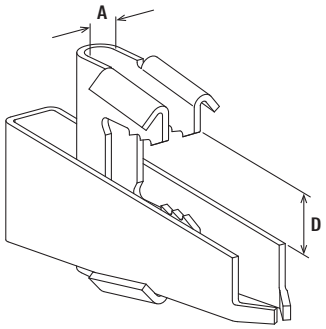


TKLS

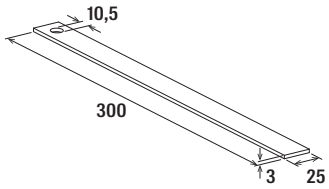


SS-TKLS

## Technical data

| Item | Item no. | VdS approval | FM approval | Hole-Ø A [mm] | Clamping range D [mm] | Max. recom. static load (centr. tension) $N_{rec}$ [kN] | Max. recom. pipe-ø acc. VDS CEA 4001 | Sales unit [pcs] |
|---|---|---|---|---|---|---|---|---|
| **TKLS Ø 9** | **531134** | Yes | – | 9 | 8 - 20 | 2.00 | ≤ DN 50 | 25 |
| **TKLS Ø 11** | **531136** | Yes | Yes | 11 | 8 - 20 | 3.50 | > DN 50 ≤ DN 100 | 25 |
| **TKLS Ø 13** | **531137** | Yes | Yes | 13 | 8 - 20 | 5.00 | > DN 100 ≤ DN 200 | 25 |
| **TKLS Ø 17** | **531138** | Yes | Yes | 17 | 11 - 26 | 10.00 | > DN 200 ≤ DN 250 | 16 |
| **SS-TKLS M10** | **566855** | Yes | – | – | – | – | – | 50 |
| **SS-TKLS M12** | **566856** | Yes | – | – | – | – | – | 50 |
| **SS-TKLS M16** | **566857** | Yes | – | – | – | – | – | 50 |

# Swivel beam clamp TKLG

Swivel beam clamp TKLG - The articulated beam clamp for fastening to inclined steel beams

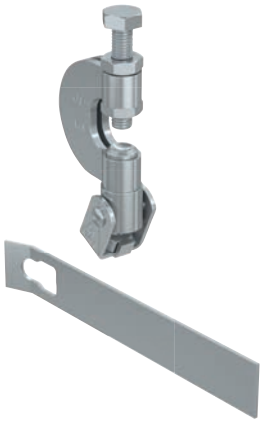



Pipe fixing to inclined steel beam



Steel beam fixing with retaining strap



## Applications

- The swivel beam clamp TKLG enables pipe and channel suspensions to be easily attached by clamping them to inclined steel supports.
- For suspending sprinkler pipes from sloped or tilted steel supports up to a deflection angle of max. 25° in accordance with FM and VdS.
- For pipes ≥ DN 65 and when installed to tilted or sloped steel beams, the TKLG support clamp must be secured to the steel support with the SS-TKLG retaining strap for VdS-compliant installation.
- Suitable for pipelines up to DN 100 according to VdS.
- Suitable for steel beams with flange thicknesses of max. 17 mm.
- For use in dry interior areas.

## Advantages

- The hinged design allows installation to inclined or tilted steel beams without welding or drilling.
- The joint connection can be rotated 360° and allows angle mounting from 0-180°.
- FM and VdS approval guarantee objectively tested functional reliability.
- Suitable for use in stationary sprinkler systems.
- The solid design of the TKLG allows a high load capacity.
- The M8 or M10 threaded mount allows threaded rods to be installed quickly and easily on the TKLG.
- Suitable for steel beams with flange thicknesses up to max. 17 mm

## Properties

- Material TKLG: high alloy steel S420NC
- Material screw: steel grade 8.8
- Material nut: steel acc. to DIN 267-4, grade min. 8
- Material SS-TKLG: steel DX51D+Z275
- Zinc plating: electro zinc-plated

## Certificates

FM APPROVED

VdS

G 423024

## Installation TKLG

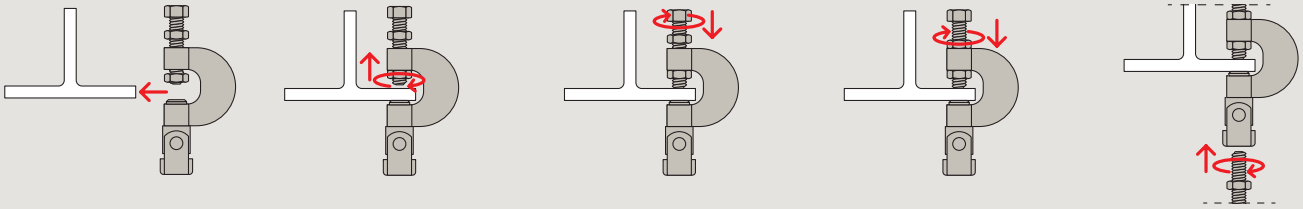

## FM/VdS-approved installation

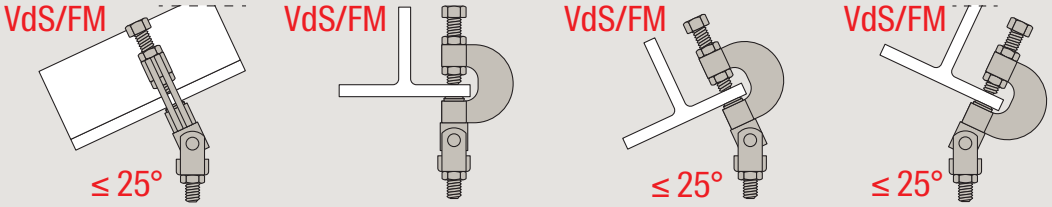


## Other installations

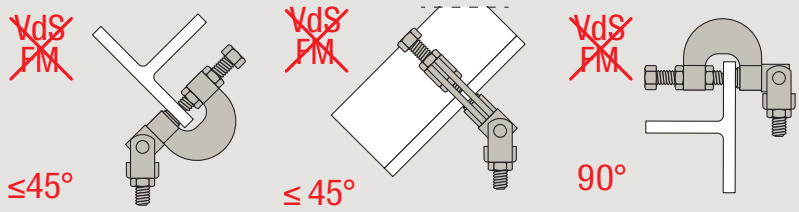

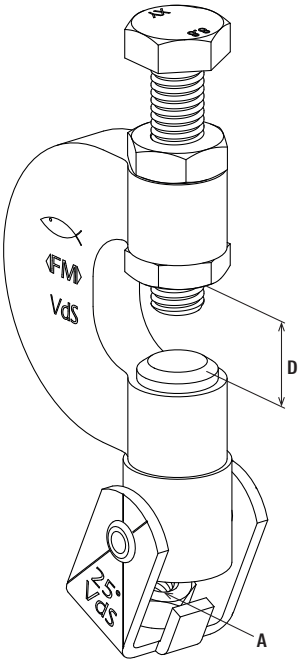


TKLG

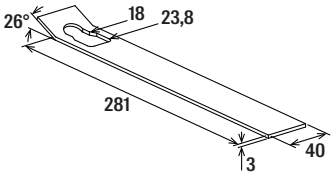


SS-TKLG

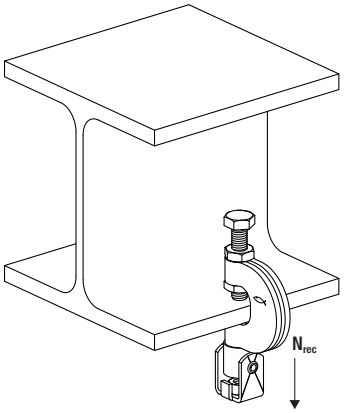


## Technical data

| Item | Item no. | VdS approval | FM approval | Clamping range D [mm] | Thread A | Max. recom. static load at 0-25° $N_{rec}$ [kN] | Max. recom. static load at 25-45° $N_{rec}$ [kN] | Tightening torque $T_{inst}$ [Nm] | Sales unit [pcs] |
|---|---|---|---|---|---|---|---|---|---|
| **TKLG M8** | **570846** | Yes | – | 3 - 17 | M8 | 2.50 | 1.50 | 18 | 25 |
| **TKLG M10** | **570847** | Yes | Yes | 3 - 17 | M10 | 2.50 | 1.50 | 18 | 25 |
| **SS-TKLG** | **573820** | Yes | – | – | – | – | – | – | 10 |

# Threaded rod G

Universal threaded rod for fixing pipes and channels





## Applications

- For use in dry interior areas.

## Properties

- Material threaded rod G (G6 - G24): DIN 976 steel 4.8, acc. to DIN EN ISO 898-1
- Material threaded pipe G (G½“ - G¾“): steel S235JR (material no. 1.0037), acc. to DIN EN 10025
- Zinc plating: electro zinc-plated

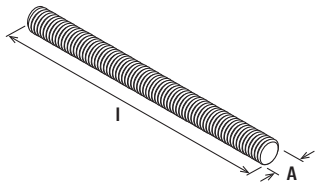


G

## Technical data

| Item | Item no. | Length l [mm] | Thread A | Sales unit [pcs] |
|---|---|---|---|---|
| **G M6 x 1000** | **020956** | 1,000 | M6 | 50 |
| **G M8 x 1000** | **079740** | 1,000 | M8 | 25 |
| **G M8 x 2000** | **079741** | 2,000 | M8 | 25 |
| **G M10 x 1000** | **079744** | 1,000 | M10 | 25 |
| **G M10 x 2000** | **079745** | 2,000 | M10 | 25 |
| **G M10 x 3000** | **557092** | 3,000 | M10 | 5 |
| **G M12 x 1000** | **020957** | 1,000 | M12 | 20 |
| **G M12 x 2000** | **579746** | 2,000 | M12 | 25 |
| **G M12 x 3000** | **064056** | 3,000 | M12 | 5 |
| **G M16 x 1000** | **020958** | 1,000 | M16 | 10 |
| **G M16 x 3000** | **568434** | 3,000 | M16 | 5 |
| **G M20 x 1000** | **557295** | 1,000 | M20 | 5 |
| **G M24 x 1000** | **557270** | 1,000 | M24 | 5 |
| **G 1/2“ x 2000** | **064093** | 2,000 | 1/2“ | 10 |
| **G 3/4“ x 2000** | **077580** | 2,000 | 3/4“ | 5 |
| **G 1“ x 2000** | **568435** | 2,000 | 1“ | 5 |

## Loads

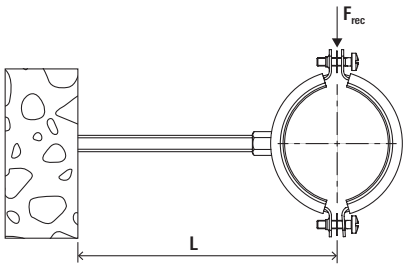


## Threaded rods (4.8)

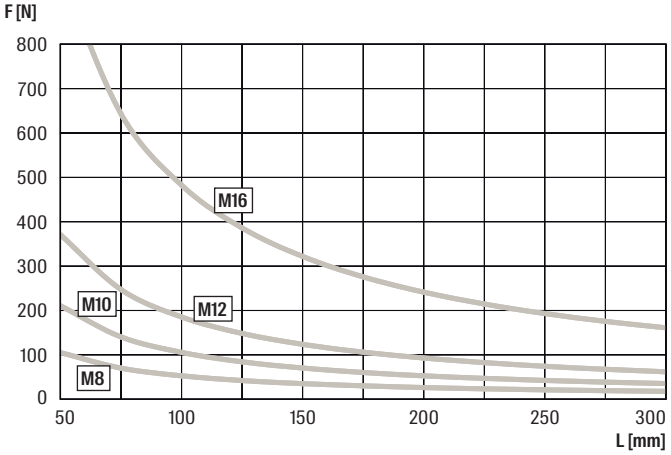


## Threaded pipes

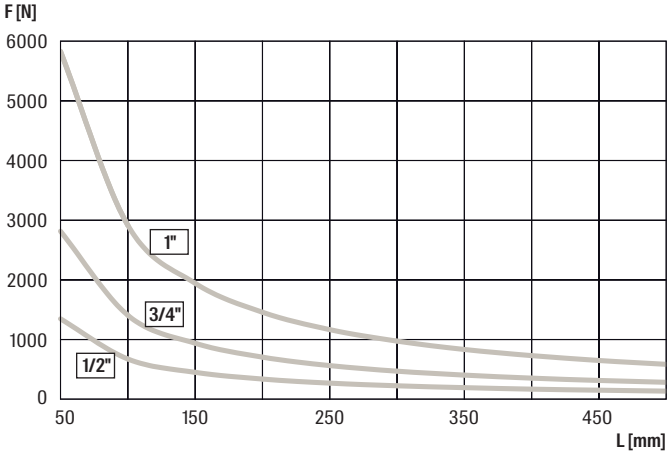

# Threaded stud GS

Universal threaded stud for mounting pipes





## Applications

- For use in dry interior areas.

## Properties

- Material: DIN 976 Steel 4.6 acc. to DIN EN ISO 898-1
- Zinc plating: electro zinc-plated

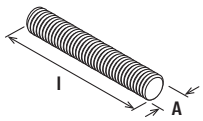


GS

## Technical data

| Item | Item no. | Length l [mm] | Thread A | Sales unit [pcs] |
|---|---|---|---|---|
| GS M6 x 25 | 544589 | 25 | M6 | 100 |
| GS M6 x 40 | 544590 | 40 | M6 | 100 |
| GS M6 x 50 | 544591 | 50 | M6 | 100 |
| GS M6 x 70 | 544592 | 70 | M6 | 100 |
| GS M6 x 80 | 544593 | 80 | M6 | 100 |
| GS M6 x 100 | 544594 | 100 | M6 | 100 |
| GS M8 x 25 | 079750 | 25 | M8 | 100 |
| GS M8 x 40 | 079751 | 40 | M8 | 100 |
| GS M8 x 50 | 079752 | 50 | M8 | 100 |
| GS M8 x 60 | 079753 | 60 | M8 | 100 |
| GS M8 x 70 | 079754 | 70 | M8 | 100 |
| GS M8 x 80 | 079755 | 80 | M8 | 100 |
| GS M8 x 100 | 079757 | 100 | M8 | 100 |
| GS M8 x 120 | 535535 | 120 | M8 | 50 |
| GS M8 x 150 | 079758 | 150 | M8 | 50 |
| GS M8 x 180 | 535536 | 180 | M8 | 50 |
| GS M8 x 200 | 079759 | 200 | M8 | 50 |

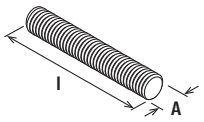


GS

## Technical data

| Item | Item no. | Length l [mm] | Thread A | Sales unit [pcs] |
|---|---|---|---|---|
| GS M10 x 25 | 079765 | 25 | M10 | 100 |
| GS M10 x 40 | 079766 | 40 | M10 | 100 |
| GS M10 x 60 | 079767 | 60 | M10 | 100 |
| GS M10 x 80 | 079768 | 80 | M10 | 100 |
| GS M10 x 100 | 079769 | 100 | M10 | 100 |
| GS M10 x 120 | 079770 | 120 | M10 | 50 |
| GS M10 x 150 | 079771 | 150 | M10 | 50 |
| GS M10 x 200 | 079772 | 200 | M10 | 50 |
| GS M12 x 40 | 091442 | 40 | M12 | 100 |
| GS M12 x 60 | 091443 | 60 | M12 | 100 |
| GS M12 x 80 | 091444 | 80 | M12 | 100 |
| GS M12 x 100 | 091461 | 100 | M12 | 100 |
| GS M12 x 120 | 091462 | 120 | M12 | 50 |
| GS M12 x 150 | 091463 | 150 | M12 | 50 |
| GS M12 x 200 | 091464 | 200 | M12 | 50 |
| GS M16 x 40 | 570691 | 40 | M16 | 50 |

## Loads

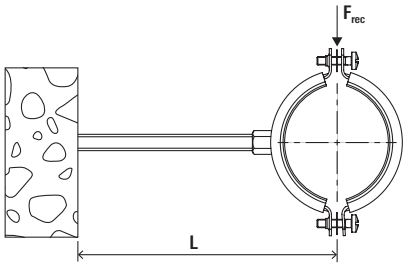


## Threaded rods (4.8)

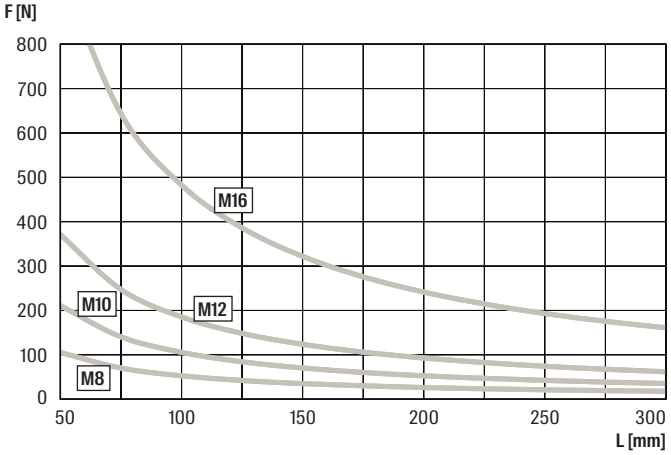


## Threaded pipes

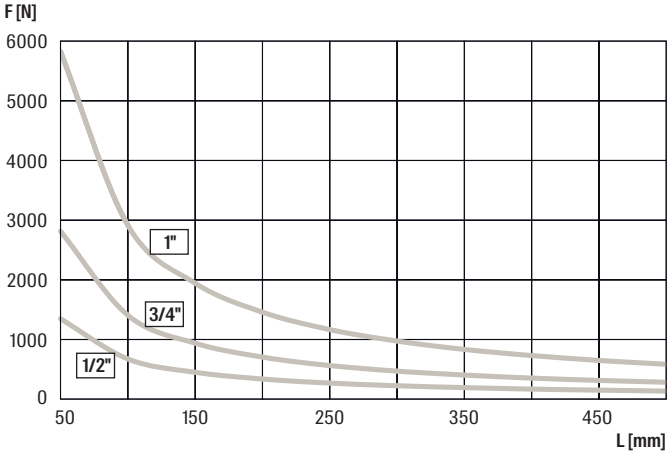

# Base plates GPL / GPS / GPSR / GPR

Base plates GPL / GPS / GPSR / GPR for dimensionally stable connections between the substrate and pipeline

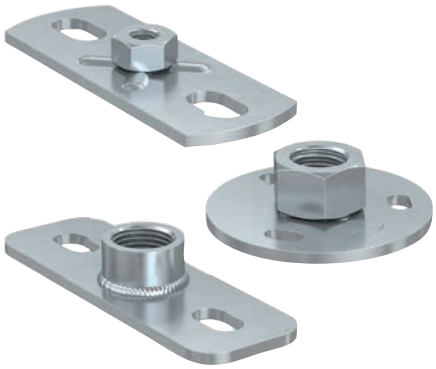



Plastic pipe with double clamp installation



Baseplate on installation channel



## Applications

- Creation of dimensionally stable connections between the substrate and pipeline.
- For use in dry interior areas.

## Advantages

- The base plate´s slots allow easy alignment.
- GPSR with round welded nut for rigid connection of threaded rods to the substrate.

## Properties

- Material: steel DD11 (material no. 1.0332) acc. to DIN EN 10111
- Zinc plating: electro zinc-plated

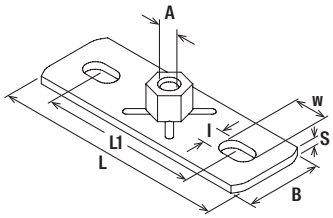


GPL/GPS

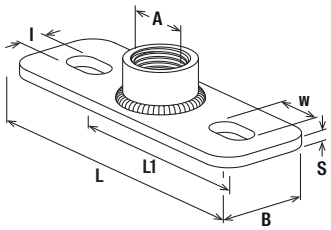


GPSR

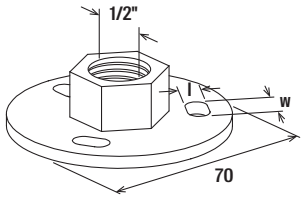


GPR

## Technical data

| Item | Item no. | Welding type | Thread A | Length L [mm] | Width B [mm] | Hole spacing L1 [mm] | Slot l x w [mm] | Thickness S [mm] | Max. recom. static load (centr. tension) $N_{rec}$ [kN] | Sales unit [pcs] |
|---|---|---|---|---|---|---|---|---|---|---|
| **GPL M8** | **079665** | spot welded | M8 | 80 | 30 | 54 | 9 x 16 | 3.0 | 2.40 | 25 |
| **GPL M10** | **079666** | spot welded | M10 | 80 | 30 | 54 | 9 x 16 | 3.0 | 2.40 | 25 |
| **GPL M8/M10** | **553637** | spot welded | M8 / M10 | 80 | 30 | 54 | 9 x 18 | 3.0 | 2.40 | 25 |
| **GPL 1/2“** | **079667** | spot welded | 1/2“ | 80 | 30 | 54 | 9 x 16 | 3.0 | 2.40 | 25 |
| **GPS M10** | **079671** | spot welded | M10 | 120 | 40 | 79 | 11 x 19 | 4.0 | 6.00 | 25 |
| **GPS M12** | **040398** | spot welded | M12 | 120 | 40 | 79 | 11 x 19 | 4.0 | 6.00 | 25 |
| **GPS 1/2“** | **079672** | spot welded | 1/2“ | 120 | 40 | 79 | 11 x 19 | 4.0 | 8.00 | 25 |
| **GPSR M10** | **570927** | round welded | M10 | 120 | 40 | 79 | 11 x 19 | 4.0 | 6.00 | 25 |
| **GPSR M12** | **570928** | round welded | M12 | 120 | 40 | 79 | 11 x 19 | 4.0 | 7.50 | 25 |
| **GPSR M16** | **504408** | round welded | M16 | 120 | 40 | 79 | 11 x 19 | 4.0 | 8.00 | 25 |
| **GPSR 1/2“** | **570929** | round welded | 1/2“ | 120 | 40 | 79 | 11 x 19 | 4.0 | 8.00 | 25 |
| **GPSR 3/4“** | **020968** | round welded | 3/4“ | 120 | 40 | 79 | 11 x 19 | 4.0 | 8.00 | 25 |
| **GPSR 1“** | **570930** | round welded | 1“ | 120 | 40 | 79 | 13 x 19 | 4.0 | 10.00 | 25 |

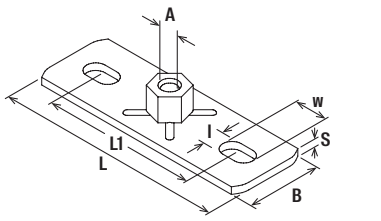


GPL/GPS

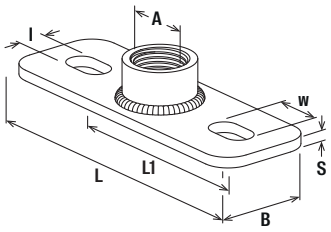


GPSR

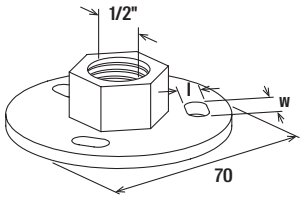


GPR

## Technical data

| | Item no. | Welding type | Thread<br>A | Length<br>L<br>[mm] | Width<br>B<br>[mm] | Hole spacing<br>L1<br>[mm] | Slot<br>l x w<br>[mm] | Thickness<br>S<br>[mm] | Max. recom. static load (centr. tension)<br>$N_{rec}$<br>[kN] | Sales unit<br>[pcs] |
|---|---|---|---|---|---|---|---|---|---|---|
| **Item** | | | | | | | | | | |
| **GPR 1/2“** | **037289** | spot welded | 1/2“ | – | – | – | 11 x 7 | 4.0 | 4.00 | 25 |

9

# Stud screw STST with TX star recess

Stud screw STST for the direct mounting of pipe clamps to the substrate

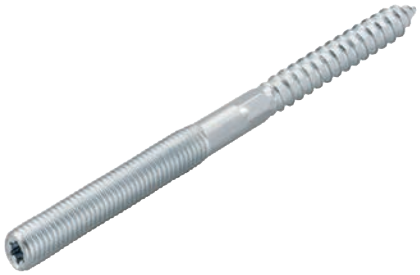



## Applications

- Stud screw for easy attachment of pipe clamps directly to the substrate using plugs with TX drive.
- Direct connection to wooden surfaces without plugs using a wooden thread.
- For use in dry indoor areas.

## Advantages

- Fixing with a nylon plug to brick or direct into timber construction is simple with the torx drive or the integrated hexagon.
- Different thread lengths and diameters allow a wide range of applications.

## Properties

- Material: steel 4.6 acc. to DIN EN ISO 898-1
- Zinc plating: electro zinc-plated

## Installation STST

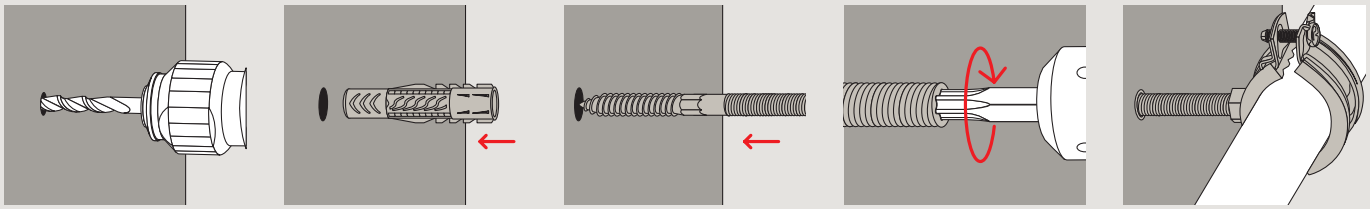

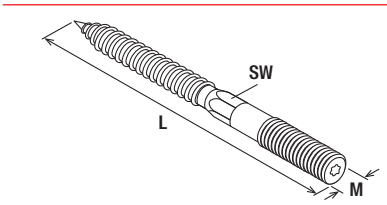


STST

## Technical data

| Item | Item no. | Length L [mm] | Thread M | Drive | Width across nut SW [mm] | Sales unit [pcs] |
|---|---|---|---|---|---|---|
| **STST 6 x 60** | **504400**[1] | 60 | M6 | TX15 | – | 100 |
| **STST 6 x 80** | **077714**[1] | 80 | M6 | TX15 | – | 100 |
| **STST 8 x 50** | **079780**[1] | 50 | M8 | TX25 | – | 100 |
| **STST 8 x 60** | **079781** | 60 | M8 | TX25 | 6 | 100 |
| **STST 8 x 80** | **079782** | 80 | M8 | TX25 | 6 | 100 |
| **STST 8 x 100** | **079783** | 100 | M8 | TX25 | 6 | 100 |
| **STST 8 x 120** | **079784** | 120 | M8 | TX25 | 6 | 100 |
| **STST 8 x 140** | **079785** | 140 | M8 | TX25 | 6 | 50 |
| **STST 8 x 180** | **079786** | 180 | M8 | TX25 | 6 | 50 |
| **STST 10 x 60** | **077689** | 60 | M10 | TX25 | 8 | 100 |
| **STST 10 x 80** | **077707** | 80 | M10 | TX25 | 8 | 100 |
| **STST 10 x 100** | **077708** | 100 | M10 | TX25 | 8 | 100 |
| **STST 10 x 120** | **077709** | 120 | M10 | TX25 | 8 | 100 |
| **STST 10 x 140** | **077711** | 140 | M10 | TX25 | 8 | 50 |
| **STST 10 x 180** | **077712** | 180 | M10 | TX25 | 8 | 50 |
| **STST 12 x 100** | **535541** | 100 | M12 | TX30 | 10 | 100 |
| **STST 12 x 160** | **535542** | 160 | M12 | TX30 | 10 | 50 |

[1] without hex drive

# Support hanger AHB

Support hanger AHB for the fixing and height regulation of pipe clamps



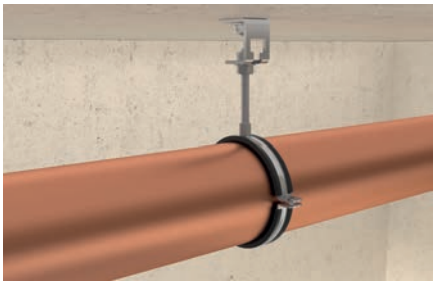

Height adjustable pipe installation



## Applications

- Component for height adjustment.
- A washer should be used when using size M8 threaded rods.
- For use in dry interior areas.

## Advantages

- The seat of the support hanger allows subsequent height regulation at any time.
- The base plate's long slot allows the support hanger to be easily aligned.
- The perforated opening means that a component can be simply hung and adjusted using a threaded rod and nut.
- Suitable for threaded rods M8, M10 and M12.

## Properties

- Material: steel DD11 (material no. 1.0332) acc. to DIN EN 10111
- Zinc plating: electro zinc-plated

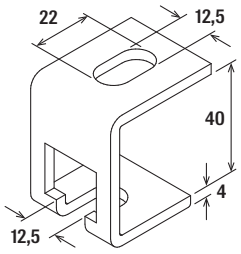


AHB

## Technical data

| Item | Item no. | For thread | Max. recom. static load (centr. tension) $N_{rec}$ [kN] | Sales unit [pcs] |
|---|---|---|---|---|
| **AHB** | **079675** | M8, M10, M12 | 1.20 | 25 |

# Multi connector MW

Multi connector MW for the flexible connection of up to three pipe clamps



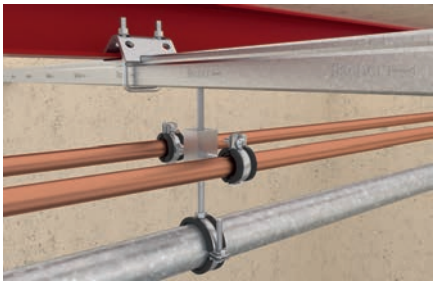

Fixation with multi-connector



## Applications

- Cube with four threaded drill holes for simple connection.
- Ideal for connecting threaded rods and bolts at 90°.
- For use in dry interior areas.

## Advantages

- Flexible connection of pipe clamps.
- Fixing of up to three pipes.
- Made of high-strength die-cast.
- Suitable for M8 threaded studs.

## Properties

- Material: zinc die-casting

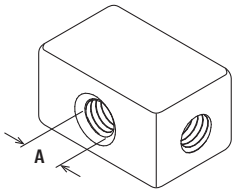


MW

## Technical data

| Item | Item no. | Thread A | Max. recom. static load (centr. tension) $N_{rec}$ [kN] | Sales unit [pcs] |
|---|---|---|---|---|
| **MW M 8** | **079717** | M8 | 2.50 | 50 |

# Parallel connector PV

Parallel connector PV for the easy extension and connection of threaded rods





Longitudinal channel connection



## Applications

- Simple, quick-mount connector for extending and connecting threaded rods.
- Parallel connector for extending threaded rods.
- Secure using locking nut.
- For use in dry interior areas.

## Advantages

- The parallel connector‘s design allows the threaded rods to be installed quickly.
- Designed for simple and fast height adjustment.
- The PV allows the height to be adjusted during installation.

## Properties

- Material: zinc die-casting

## Installation PV

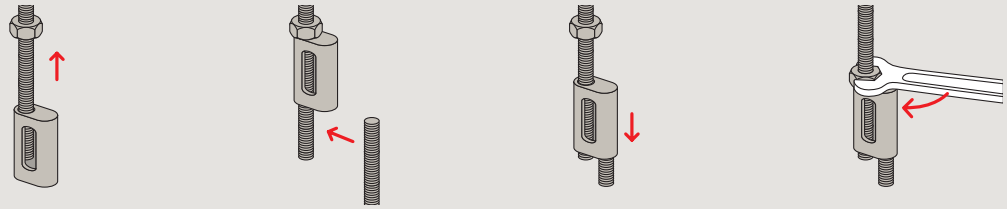

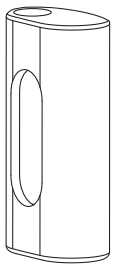

PV

## Technical data

| Item | Item no. | For thread | Max. recom. static load (centr. tension) $N_{rec}$ [kN] | Sales unit [pcs] |
|---|---|---|---|---|
| **PV M 6** | **020947** | M6 | 0.30 | 100 |
| **PV M 8** | **079678** | M8 | 2.00 | 100 |

# Double connector plate DPP, DPF

Base plate - double connector plate for the fixing of two parallel pipelines





## Applications

- Fixing element for the installation of two parallel pipelines with just one fixing point.
- For use in dry interior areas.

## Advantages

- The double connector plate design saves a fixing point for the fixing of two pipelines.
- The two-part double connector plate DPF is suitable for variable pipe spacing.
- The base plate's long slots allow the double connector plate to be easily aligned.
- The rounded design of the connector plate is ideal for a visual installation.

## Properties

- Material DPP: DC04 (material no. 1.0338) acc. to DIN EN 10130
- Material DPF: DC01 (material no. 1.0330) acc. to DIN EN 10130
- Zinc plating: electro zinc-plated

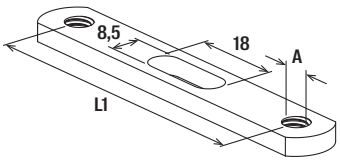


DPP

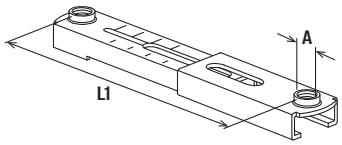


DPF

## Technical data

| Item | Item no. | Length L1 [mm] | Thread A | Max. recom. static load (centr. tension) $N_{rec}$ [kN] | Sales unit [pcs] |
|---|---|---|---|---|---|
| **DPP 65** | **079702** | 65 | M8 | 1.50 | 50 |
| **DPP 85** | **079703** | 85 | M8 | 1.00 | 50 |
| **DPP 105** | **079704** | 105 | M8 | 0.75 | 50 |
| **DPF 60 - 105** | **024648** | – | M8 | – | 50 |

# Bolt connector SBB

The threaded pin with shaft and double thread





## Applications

- For use in dry interior areas.

## Properties

- Material: steel S235JR (material no. 1.0037) acc. to DIN EN 10025
- Zinc plating: electro zinc-plated

## Bolt connector SBB

| Item | Item no. | Length l [mm] | Thread A | Sales unit [pcs] |
|---|---|---|---|---|
| **SBB 35** | **079705** | 35 | M8 | 100 |
| **SBB 45** | **079706** | 45 | M8 | 100 |
| **SBB 55** | **079707** | 55 | M8 | 100 |

# Turnbuckle SPS, Bolt left-/right-hand BLR

Turnbuckle SPS and bolt BLR with left/right thread for anchoring, height regulation and fixing





## Applications

- For use in dry interior areas.

## Properties

- Material SPS: steel ≥ 330 N/mm² acc. to DIN 1480
- Material BLR: steel 4.6 acc. to DIN 976
- Zinc plating: electro zinc-plated

## Turnbuckle SPS, Bolt BLR

| Item | Item no. | Length L [mm] | Thread A | Max. recom. static load (centr. tension) $N_{rec}$ [kN] | Sales unit [pcs] |
|---|---|---|---|---|---|
| **SPS M10** | **537211** | 125 | M10 | 10.00 | 25 |
| **BLR 100 M10** | **537210** | 100 | M10 | 10.00 | 25 |
| **SPS M12** | **064090** | 125 | M12 | 15.00 | 25 |
| **BLR 100 M12** | **064091** | 100 | M12 | 15.00 | 25 |

# Hexagonal screw SKS

The universal hexagonal screw



## Applications

- For use in dry interior areas.

## Properties

- Material: steel acc. to DIN EN ISO 4017, steel 8.8
- Zinc plating: electro zinc-plated



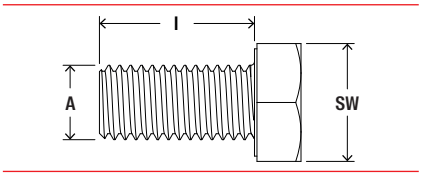


SKS

## Hexagonal screw SKS

| Item | Item no. | Thread A | Length l [mm] | Width across nut SW [mm] | Sales unit [pcs] |
|---|---|---|---|---|---|
| SKS M6 x 20 | 079711 | M6 | 20 | 10 | 100 |
| SKS M8 x 16 | 079415 | M8 | 16 | 13 | 100 |
| SKS M8 x 20 | 570677 | M8 | 20 | 13 | 200 |
| SKS M8 x 30 | 079713 | M8 | 30 | 13 | 100 |
| SKS M8 x 45 | 079714 | M8 | 45 | 13 | 100 |
| SKS M8 x 55 | 079715 | M8 | 55 | 13 | 100 |
| SKS M8 x 100 | 079827 | M8 | 100 | 13 | 100 |
| SKS M10 x 16 | 570678 | M10 | 16 | 17 | 200 |
| SKS M10 x 20 | 079416 | M10 | 20 | 17 | 100 |
| SKS M10 x 25 | 570679 | M10 | 25 | 17 | 200 |
| SKS M10 x 30 | 079417 | M10 | 30 | 17 | 100 |
| SKS M10 x 55 | 079721 | M10 | 55 | 17 | 100 |
| SKS M10 x 65 | 535537 | M10 | 65 | 17 | 50 |
| SKS M10 x 85 | 505552 | M10 | 85 | 17 | 100 |
| SKS M12 x 20 | 570680 | M12 | 20 | 19 | 100 |
| SKS M12 x 25 | 535538 | M12 | 25 | 19 | 100 |
| SKS M12 x 30 | 570681 | M12 | 30 | 19 | 100 |
| SKS M12 x 35 | 570682 | M12 | 35 | 19 | 100 |
| SKS M12 x 55 | 077611 | M12 | 55 | 19 | 100 |
| SKS M12 x 65 | 535539 | M12 | 65 | 19 | 50 |
| SKS M12 x 85 | 505553 | M12 | 85 | 19 | 100 |

# Cylindrical head screw ZKS

The universal cylindrical head screw




## Applications

- For use in dry interior areas.

## Properties

- Material: steel 8.8
- Zinc plating: electro zinc-plated



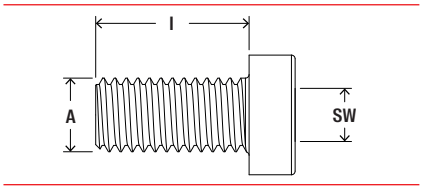


ZKS

## Technical data

| Item | Item no. | Thread<br>A | Length<br>l<br>[mm] | Width across nut (hexagon socket)<br>SW<br>[mm] | Sales unit<br>[pcs] |
|---|---|---|---|---|---|
| **ZKS M8 x 20** | **570690** | M8 | 20 | 5 | 200 |

# Washer U

Washer for fischer installation system





## Applications

- For use in dry interior areas.

## Properties

- Material: steel acc. to DIN 10139
- Zinc plating: electro zinc-plated

## Washer U

| Item | Item no. | Thickness S [mm] | Hole-ø D [mm] | External-ø d [mm] | Sales unit [pcs] |
|---|---|---|---|---|---|
| **U 6 x 12** | **544595** | 1.6 | 6.4 | 12 | 100 |
| **U 8 x 17** | **091477** | 1.6 | 8.4 | 17 | 100 |
| **U 8 x 28** | **079725** | 2.0 | 8.4 | 28 | 100 |
| **U 8 x 40** | **079729** | 3.0 | 8.4 | 40 | 100 |
| **U 10 x 21** | **091478** | 2.0 | 10.5 | 21 | 100 |
| **U 10 x 28** | **079726** | 2.0 | 10.5 | 28 | 100 |
| **U 10 x 40** | **079730** | 3.0 | 10.5 | 40 | 100 |
| **U 12 x 24** | **557301** | 2.5 | 12.5 | 24 | 100 |
| **U 12 x 40** | **024649** | 3.0 | 12.5 | 40 | 100 |
| **U 16 x 30** | **557303** | 3.0 | 16.5 | 30 | 50 |
| **U 16 x 40** | **535540** | 3.0 | 17 | 40 | 50 |

# Hexagonal nut MU

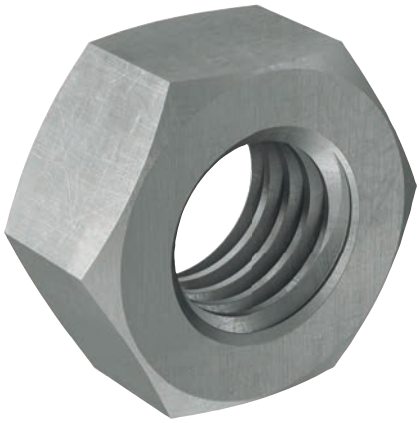



## Applications

- For use in dry interior areas.

## Properties

- Material: steel acc. to DIN 934, resistance class 8
- Zinc plating: electro zinc-plated

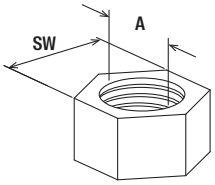


MU

## Hexagonal nut MU

| Item | Item no. | Thread<br>A | Width across nut<br>SW<br>[mm] | Sales unit<br>[pcs] |
|---|---|---|---|---|
| **MU M6** | **079733** | M6 | 10 | 100 |
| **MU M8** | **079734** | M8 | 13 | 100 |
| **MU M10** | **079735** | M10 | 17 | 100 |
| **MU M12** | **024650** | M12 | 19 | 100 |
| **MU M16** | **557297** | M16 | 24 | 50 |
| **MU M20** | **535532** | M20 | 30 | 15 |
| **MU M24** | **535534** | M24 | 36 | 15 |

# Hexagonal connector VM

Extension connector for connecting threaded rods





## Applications

- For use in dry interior areas.

## Properties

- Material: C8C (material no. 1.0213) acc. to DIN EN 10263-2
- Zinc plating: electro zinc-plated

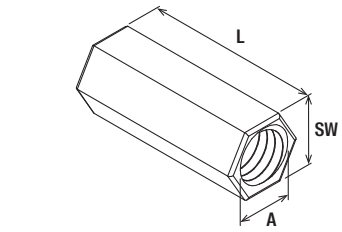


VM

## Hexagonal connector VM

| Item | Item no. | Length L [mm] | Thread A | Width across nut SW [mm] | Sales unit [pcs] |
|---|---|---|---|---|---|
| **VM M6** | **014319** | 25 | M6 | 10 | 100 |
| **VM M8** | **079690** | 30 | M8 | 11 | 100 |
| **VM M10** | **079691** | 30 | M10 | 13 | 100 |
| **VM M12** | **020971** | 40 | M12 | 17 | 100 |
| **VM M16** | **508833** | 40 | M16 | 24 | 50 |

# Eyebolt AG

The eyebolt with M8/M10 thread





## Applications

- For use in dry interior areas.

## Properties

- Material: steel S235JR (material no. 1.0037) acc. to DIN EN 10025
- Zinc plating: electro zinc-plated

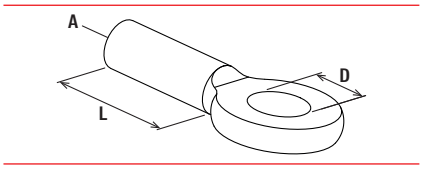


AG

## Eyebolt AG

| Item | Item no. | Length L [mm] | Thread A | Hole-Ø D [mm] | Max. recom. static load (centr. tension) $N_{rec}$ [kN] | Sales unit [pcs] |
|---|---|---|---|---|---|---|
| **AG 8 x 25** | **079696** | 25 | M8 | 8.5 | 5.00 | 100 |
| **AG 10 x 25** | **079697** | 25 | M10 | 12 | 8.00 | 100 |

# Thread hanger RAH

Universal thread hanger with internal thread connection





## Applications

- For use in dry interior areas.

## Properties

- Material: 11SMnPb30 (material no. 1.0718) acc. to DIN EN 10087
- Zinc plating: electro zinc-plated

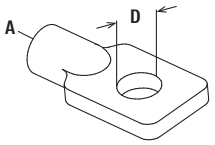


RAH

## Thread hanger RAH

| Item | Item no. | Thread A | Hole-Ø D [mm] | Max. recom. static load (centr. tension) $N_{rec}$ [kN] | Sales unit [pcs] |
|---|---|---|---|---|---|
| **RAH M8** | **079698** | M8 | 12 | 4.00 | 50 |
| **RAH M10** | **079699** | M10 | 12 | 4.00 | 50 |

# Reduction piece RD

Universal reduction piece for metric thread.

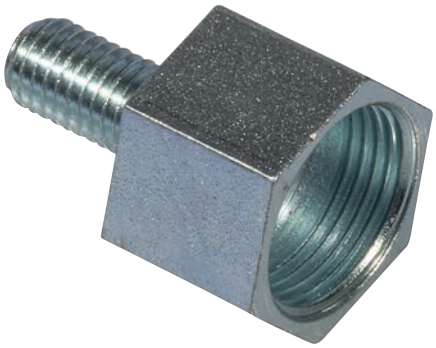



## Applications

- For use in dry interior areas.

## Properties

- Material: 11SMnPb30 (material no. 1.0718) acc. to DIN EN 10087
- Zinc plating: electro zinc-plated

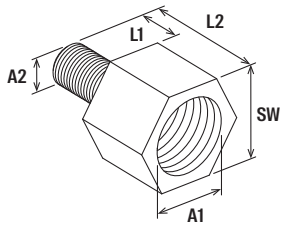


RD

## Reduction piece RD

| Item | Item no. | Internal thread A1 | External thread A2 | Length $L_1$ [mm] | Length $L_2$ [mm] | Width across nut SW [mm] | Sales unit [pcs] |
|---|---|---|---|---|---|---|---|
| **RD M6/M8** | **079694** | M6 | M8 | 8.5 | 20 | 13 | 100 |
| **RD M8/M6** | **020936** | M8 | M6 | 7 | 19 | 13 | 100 |
| **RD M10/M8** | **079692** | M10 | M8 | 8 | 23 | 13 | 50 |
| **RD M12/M10** | **079693** | M12 | M10 | 10 | 25 | 17 | 100 |
| **RD M12/M16** | **504397** | M12 | M16 | 14 | 32 | 19 | 50 |
| **RD M16/M12** | **504399** | M16 | M12 | 10 | 32 | 24 | 50 |
| **RD 1/2“/M10** | **079695** | 1/2“ | M10 | 10 | 29 | 24 | 10 |
| **RD M16/M12 long** | **538080** | M16 | M12 | 25 | 46.5 | 24 | 10 |
| **RD 1/2“/M10 long** | **537215** | 1/2“ | M10 | 20 | 39 | 24 | 10 |
| **RD 3/4“/M12 long** | **537213** | 3/4“ | M12 | 25 | 46.5 | 30 | 10 |
| **RD 3/4“/M16 long** | **537214** | 3/4“ | M16 | 25 | 46.5 | 30 | 10 |

# Reduction socket RDM and GRD

Universal reduction socket





## Applications

- For use in dry interior areas.

## Properties

- Material RDM: SAE 1008
- Material GRD: 11SMnPb30 (material no. 1.0718) acc. to DIN EN 10277
- Zinc plating: electro zinc-plated

## Reduction socket RDM and GRD

| Item | Item no. | Thread A | Thread A2 | Sales unit [pcs] |
|---|---|---|---|---|
| **RDM M10/M8** | **079413** | M8 | M10 | 50 |
| **RDM M12/M10** | **079414** | M10 | M12 | 100 |
| **GRD 1/2“ / M10** | **077609** | 1/2“ | M10 | 100 |
| **GRD 1/2“ / M12** | **077608** | 1/2“ | M12 | 100 |
| **GRD 3/4“ / M10** | **077607** | 3/4“ | M10 | 100 |
| **GRD 3/4“ / M12** | **077606** | 3/4“ | M12 | 100 |

# Flat eye screw LLS

The flat eye screw with wood type thread





## Applications

- For use in dry interior areas.

## Properties

- Material: steel S235JR (material no. 1.0037) acc. to DIN EN 10025
- Zinc plating: electro zinc-plated

## Flat eye screw LLS

| Item | Item no. | Length l [mm] | Hole-Ø D [mm] | Sales unit [pcs] |
|---|---|---|---|---|
| **LLS 6 x 50** | **079700** | 50 | 8.5 | 100 |
| **LLS 8 x 50** | **079701** | 50 | 10.5 | 100 |

# Textile web strapping GWB

Textile web strapping GWB for cost-effective, easy pipe fixings





Flexible and rigid plastic insulation pipes



## Applications

- Pipe fixing to the substrate e.g. to the raw floor.

## Advantages

- Pipe fixing using textile tape allows cheap and simple installation.
- The textile tape roll allows the correct tape length to be chosen to suit the diameter in question.
- Hangings with textile tape are a fast solution for temporary fixings.

## Properties

- Material: polypropylene
- Length: 10 m

## Building materials

**When using impact nail ED:**

- Concrete

## Installation GWB

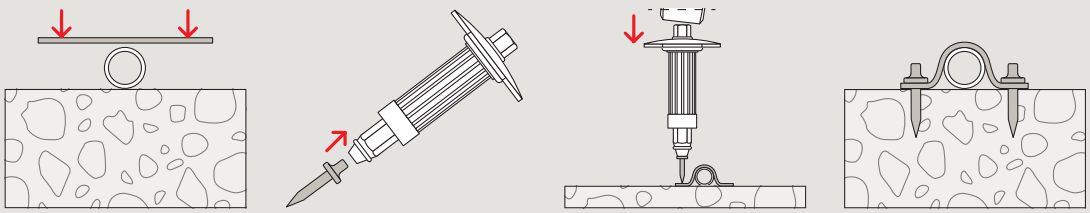

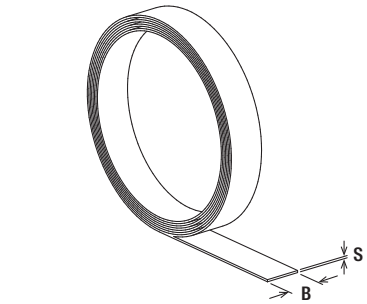


## Technical data

| Item | Item no. | Width B [mm] | Thickness S [mm] | Sales unit [pcs] |
|---|---|---|---|---|
| GWB | 020959 | 15 | 1.1 | 10 |

# Perforated steel banding LBV/LBK

Perforated steel banding LBV/LBK for the fast fixing of pipelines





Plastic pipes



## Applications

- Steel tape with stamped holes for simple installation of pipes on the substrate, e. g. on unfinished floor.
- Available as zinc-plated LBV or plastic-covered LBK.
- The fischer nail anchor FNA II is suitable for ceiling fixing in concrete.
- Use fischer thread hanger RAH for fastening to threaded rods.
- For use in dry interior areas.

## Advantages

- The perforated tape‘s material thicknesses and plastic covering allow the tapes to be easily cut to size using metal shears.
- The perforated tape‘s hole geometry enables concrete fixing using the fischer impact nail ED.

## Properties

- Material: DX51D+Z100 (material no. 1.0917) acc. to DIN EN 10.346 / For type LBW 17: Q235
- Zinc plating: electro zinc-plated
- Protective coating LBK: PE

## Building materials

**When using impact nail ED:**

- Concrete

## Installation LBV, LBK

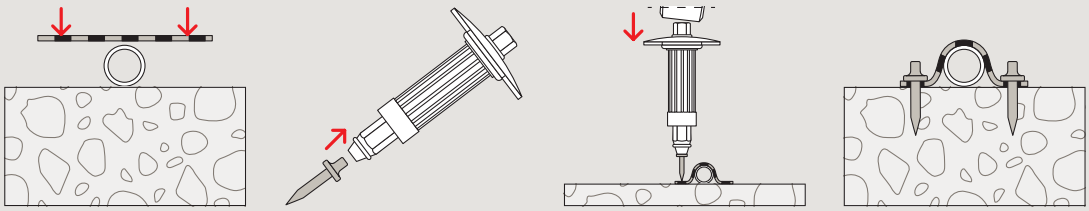

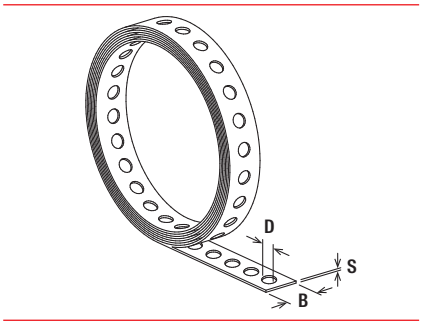


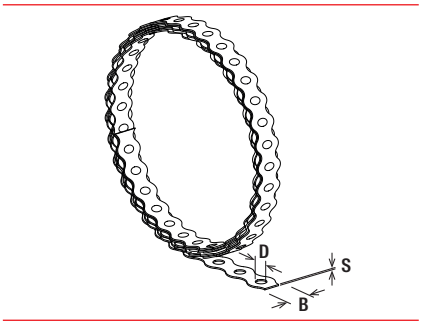


## Technical data

| Item | Item no. | Total length [mm] | Width B [mm] | Thickness S [mm] | Hole-Ø D [mm] | Sales unit [pcs] |
|---|---|---|---|---|---|---|
| **LBV 12** | **079549** | 10,000 | 12 | 0.8 | 5.0 | 10 |
| **LBV 17** | **079550** | 10,000 | 17 | 0.8 | 6.5 | 10 |
| **LBV 25** | **079551** | 10,000 | 25 | 0.9 | 8.5 | 8 |
| **LBK 14** | **079553** | 10,000 | 14 | 2.6 | 5.0 | 10 |
| **LBK 19** | **079554** | 10,000 | 19 | 2.4 | 6.5 | 8 |
| **LBK 27** | **079555** | 10,000 | 27 | 2.4 | 8.5 | 5 |
| **LBW 17** | **507435** | 10,000 | 17 | 0.8 | 6.5 | 10 |

# Impact nail ED

Fixing in concrete without pre-drilling.





Fixing armoured conduits

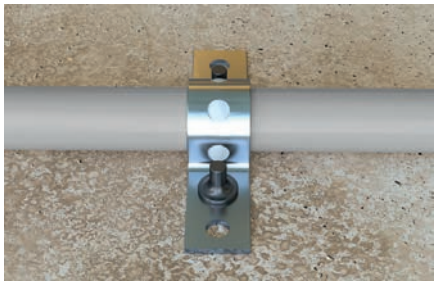

Fixing perforated tapes



## Applications

- Conduit clips such as BSM, BSMD, BSMZ
- Perforated band such as LBK, LBV

## Advantages

- The stable impact nail ED can be set in concrete with the impact nail setting tool SZE without pre-drilling. This allows for a fast installation.
- The setting tool SZE impact protection provides the best protection for your hand, thus ensuring a safe installation.

## Functioning

- The impact nail ED is set in the setting tool SZE.
- The bracket in the setting tool holds the nail securely in place during the installation procedure.
- Pre-positioning of the element to be fixed.
- The nail can be hammered through the fixing element directly into the concrete.

## Building materials

- Concrete

## Installation ED

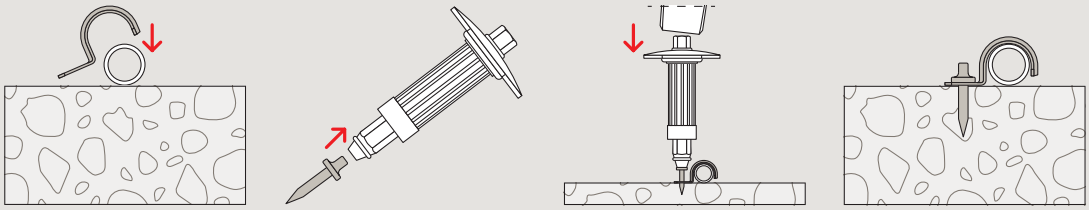

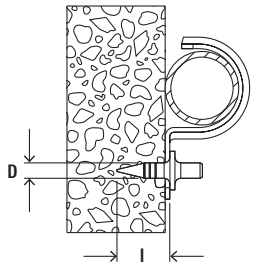


## Technical data



ED 15

| Item | Item no. | Length l [mm] | Diameter d [mm] | Sales unit [pcs] |
|---|---|---|---|---|
| **ED 15** | **048212** | 15 | 4.0 | 200 |
| **ED 18** | **079815** | 18 | 4.0 | 200 |
| **ED 22** | **014570** | 22 | 4.0 | 200 |

## Setting tool SZE



SZE Toolset for SZE

| Item | Item no. | | Sales unit [pcs] |
|---|---|---|---|
| **SZE** | **552149** | | 1 |
| **Toolset for SZE** | **552150** | | 3 |

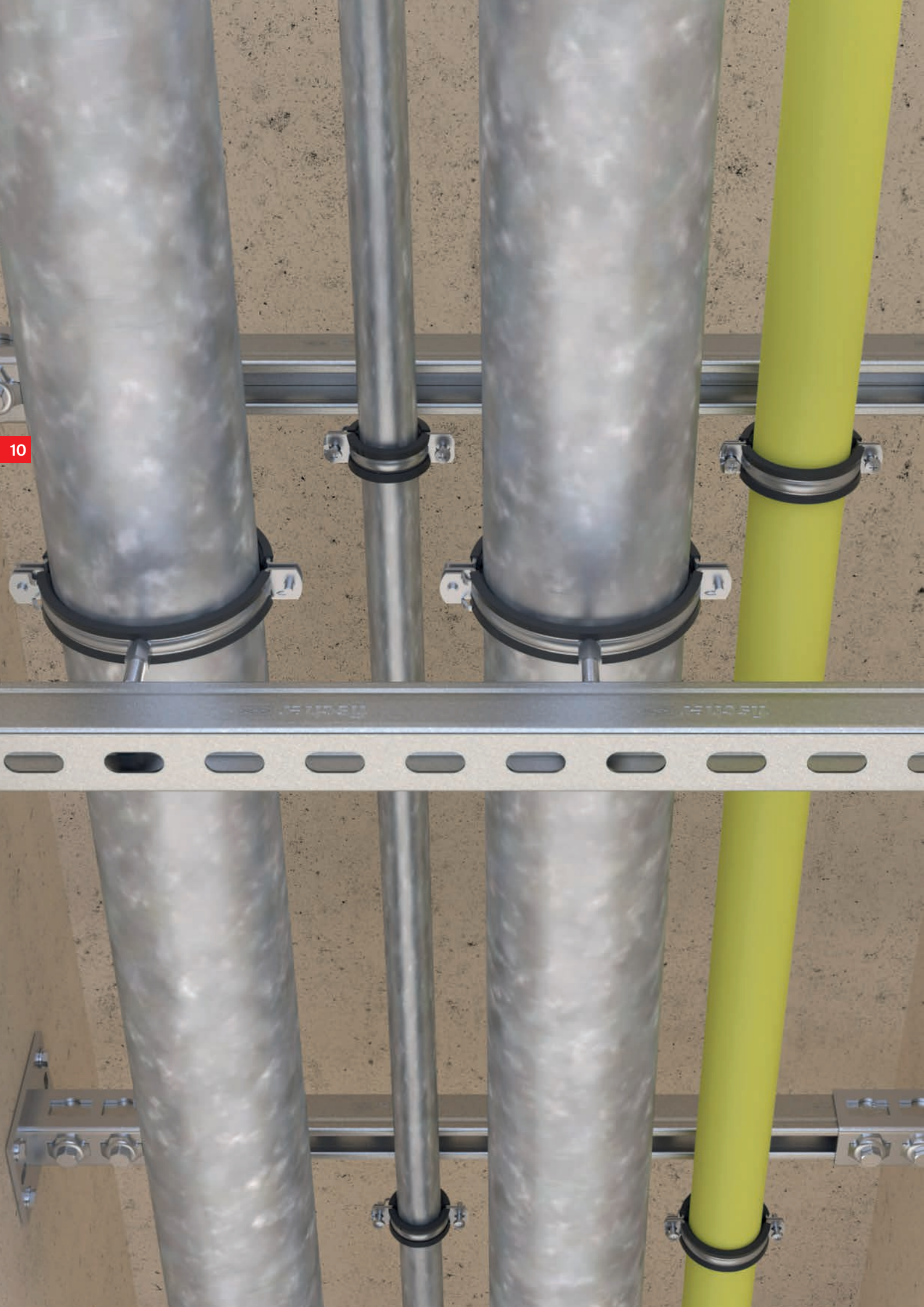

# 10
# Channel system FUS hdg.


| | | |
|---|---|---|
| Pipe clamp FRS zl | 304 |  |
| Heavy duty pipe clamp FRSM hdg - metric | 306 |  |
| Channel system FUS hdg | 308 |  |
| Channel connector FUF OC hdg / PFUF OC zl | 313 |  |
| Socket wrench FSK | 314 |  |
| Channel connector FDCC zl | 315 |  |
| Cantilever arm FCA hdg | 317 |  |
| Large cantilever arm FCAM hdg | 320 |  |
| Cover cap FEC | 322 |  |
| Push-through connector PFCN 41 zl | 323 |  |
| Saddle flange PSF zl | 325 |  |
| Universal bracket PUWS zl | 327 |  |
| Angle bracket PWK zl | 329 |  |
| Variable bracket PVB zl | 330 |  |
| Bracing elements PSAE zl | 331 |  |
| Bracket PFFF zl | 333 |  |
| Bracket PFAF zl | 334 |  |
| Bracket PFUF zl | 336 |  |
| Bracket PFUF D zl | 337 |  |
| Channel nut FCN Clix P hdg | 339 |  |
| Channel nut FCN Clix M hdg | 341 |  |
| Channel nut FCN 16 hdg | 343 |  |
| Channel washer HK 41 hdg | 345 | 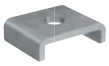 |
| Saddle flange SF hdg | 346 |  |
| Mounting bracket UWS hdg | 348 |  |
| Angle bracket WK hdg | 349 |  |
| Bracket FFF hdg | 351 |  |
| Bracket FAF hdg | 353 |  |
| Bracket FUF 21 / 41 / 62 hdg | 355 |  |
| Bracket FUF hdg | 356 |  |
| Variable bracket VB hdg | 358 |  |
| Universal hinge FUH hdg | 359 |  |
| Threaded rod bracket FSB 45° hdg | 361 |  |
| Beam clamp TKR hdg | 362 |  |
| Beam clamp TKL hdg | 364 |  |
| Beam clamp FHBC hdg | 366 |  |
| Threaded rod G hdg | 368 |  |
| Hexagonal screw SKS hdg | 368 |  |
| Washer U hdg | 369 |  |
| Hexagonal nut MU hdg | 370 |  |

# Pipe clamp FRS zl

FRS zl pipe clamp with high corrosion protection





Pipe assembly



Heavy pipe on cantilever



## Applications

- Secure fixing for pipes with threaded rods or stud screws (also when there are fire protection requirements)
- For indoor and outdoor application.

## Advantages

- The two screws allow an easy adjustment to suit the outer pipe diameter.
- The combination connecting nut with thread M8 / M10 enables optimised mounting choices.
- The sound insulation insert offers noise protection and prevents contact corrosion.
- The screw‘s safety feature ensures trouble-free installation.

## Properties

- Material: steel DC01 (material no. 1.0330) acc. to DIN EN 10130
- Coating: zinclamella
- Connecting nut: resistance welded, M8 / M10 SW13
- Locking screw: flat head screw with combination recessed head
- Material sound insulation insert: EPDM; chlorine-free; silicone-free
- Sound insulation: for DIN 4109
- Temperature range: -40 °C to +100 °C
- Hardness: 55 ± 5° Shore A
- Fire behaviour: DIN 4102: Class B2

## Installation FRS

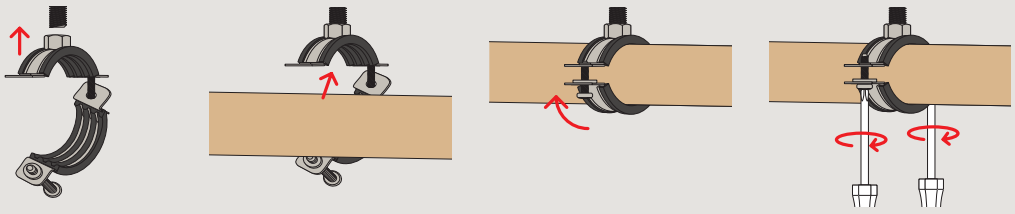

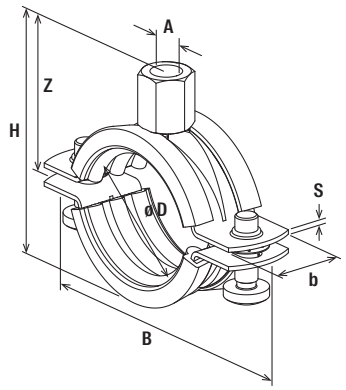


FRS

## Technical data

| Item | Item no. | Thread A | Size [in] | Clamping range D [mm] | Height H [mm] | Height Z [mm] | Width x thickness clamp band b x s [mm] | Locking screw | Max. recom. static load (centr. tension) $N_{rec}$ [kN] | Installation torque $T_{inst}$ [Nm] | Sales unit [pcs] |
|---|---|---|---|---|---|---|---|---|---|---|---|
| **FRS 12 - 15 M8/M10 zl** | **537981** | M8 / M10 | 1/4 | 12 - 15 | 39 | 31 | 20 x 1.25 | M6 | 1.00 | 2 | 100 |
| **FRS 15 - 19 M8/M10 zl** | **537982** | M8 / M10 | 3/8 | 15 - 19 | 43 | 29 | 20 x 1.25 | M6 | 1.00 | 2 | 100 |
| **FRS 20 - 24 M8/M10 zl** | **537983** | M8 / M10 | 1/2 | 20 - 24 | 48 | 32 | 20 x 1.25 | M6 | 1.00 | 2 | 100 |
| **FRS 25 - 30 M8/M10 zl** | **537984** | M8 / M10 | 3/4 | 25 - 30 | 54 | 35 | 20 x 1.25 | M6 | 1.00 | 2 | 100 |
| **FRS 32 - 37 M8/M10 zl** | **537985** | M8 / M10 | 1 | 32 - 37 | 61 | 38 | 20 x 1.25 | M6 | 1.00 | 2 | 100 |
| **FRS 40 - 45 M8/M10 zl** | **537986** | M8 / M10 | 1 1/4 | 40 - 45 | 69 | 42 | 20 x 1.25 | M6 | 1.00 | 2 | 50 |
| **FRS 48 - 54 M8/M10 zl** | **537987** | M8 / M10 | 1 1/2 | 48 - 54 | 78 | 46 | 20 x 1.25 | M6 | 1.00 | 2 | 50 |
| **FRS 55 - 61 M8/M10 zl** | **537988** | M8 / M10 | 2 | 55 - 61 | 85 | 50 | 20 x 1.25 | M6 | 1.00 | 2 | 50 |
| **FRS 60 - 64 M8/M10 zl** | **537989** | M8 / M10 | 2 | 63 - 67 | 91 | 53 | 20 x 1.25 | M6 | 1.00 | 2 | 50 |
| **FRS 72 - 78 M8/M10 zl** | **537990** | M8 / M10 | 2 1/2 | 72 - 80 | 104 | 60 | 20 x 2.0 | M6 | 1.50 | 2 | 25 |
| **FRS 87 - 92 M8/M10 zl** | **537991** | M8 / M10 | 3 | 87 - 92 | 116 | 66 | 20 x 2.0 | M6 | 1.50 | 2 | 25 |
| **FRS 95 - 103 M8/M10 zl** | **557374** | M8 / M10 | – | 95 - 103 | 130 | 73 | 25 x 2.0 | M6 | 2.00 | 2 | 25 |
| **FRS 102 - 116 M8/M10 zl** | **537992** | M8 / M10 | 4 | 108 - 116 | 140 | 78 | 25 x 2.0 | M6 | 2.00 | 2 | 20 |
| **FRS 121 - 127 M8/M10 zl** | **537993** | M8 / M10 | – | 121 - 128 | 152 | 84 | 25 x 2.5 | M6 | 2.50 | 2 | 10 |
| **FRS 133 - 141 M8/M10 zl** | **537994** | M8 / M10 | 5 | 133 - 141 | 165 | 90 | 25 x 2.5 | M6 | 2.50 | 2 | 10 |
| **FRS 159 - 162 M8/M10 zl** | **537995** | M8 / M10 | – | 159 - 165 | 198 | 102 | 25 x 2.5 | M6 | 2.50 | 2 | 8 |
| **FRS 165 - 168 M8/M10 zl** | **537996** | M8 / M10 | 6 | 165 - 168 | 192 | 104 | 25 x 2.5 | M6 | 2.50 | 2 | 8 |

# Heavy duty pipe clamp FRSM hdg - metric

The large pipe clamp with sound insulation insert for medium to heavy loads





Heavy pipe on cantilever

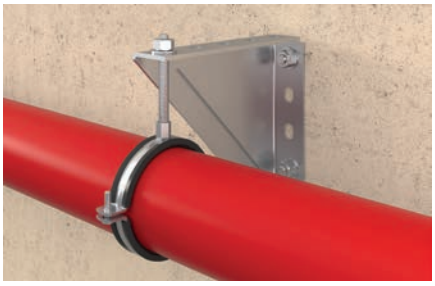

Heavy drainage pipe under angle bracket



## Applications

- Fixing of medium to heavy pipes with threaded rods (hanger bolts)
- For indoor and outdoor application.

## Advantages

- High tested loads guarantee safe functioning of the FRSM.
- The combination connecting nut with thread M10 / M12, M12 / M16 or M16 allows for optimised mounting choices.
- From Ø 124 mm it is possible to install with 2 threaded rods, e.g. for the fixing of cast iron roof drainage pipes.
- The two screws allow for easy adjustment to suit the outer pipe diameter.
- The screw‘s safety features ensures trouble-free installation.

## Properties

- Material: steel DD11 (material no. 1.0332) acc. to DIN EN 10111
- Zinc plating: hot-dip galvanised
- Connecting nut: M10 / M12 SW17, M12 / M16 SW22, M16 SW24
- Locking screw: hexagon screw with nut
- Material locking screw: stainless steel A2
- Material sound insulation insert: EPDM; chlorine-free; silicone-free
- Temperature range: -50 °C to +110 °C
- Hardness: 45 ± 5° Shore A
- Fire behaviour: DIN 4102: Class B2

## Installation FRSM

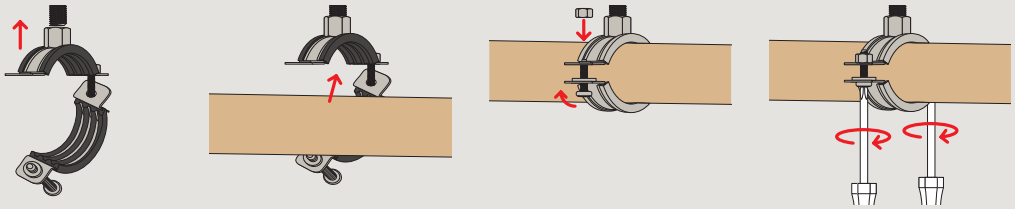

## Installation of FRSM with two threaded rods

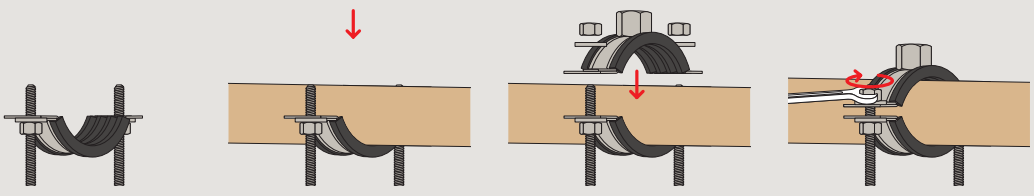

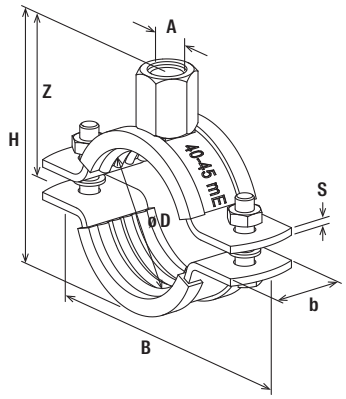


FRSM hdg - metric

## Technical data

| Item | Item no. | Thread A | Size [in] | Clamping range D [mm] | Width B [mm] | Height H [mm] | Height Z [mm] | Width x thickness clamp band b x s [mm] | Locking screw | Max. recom. static load (centr. tension) $N_{rec}$ [kN] | Installation torque $T_{inst}$ [Nm] | Sales unit [pcs] |
|---|---|---|---|---|---|---|---|---|---|---|---|---|
| **FRSM 19 - 23 M10/M12 hdg** | **558524** | M10 / M12 | 1/2 | 19 - 23 | 77 | 56 | 38 | 25 x 2.5 | M6 | 2.50 | 2 | 50 |
| **FRSM 24 - 29 M10/M12 hdg** | **558525** | M10 / M12 | 3/4 | 24 - 29 | 83 | 62 | 41 | 25 x 2.5 | M6 | 2.50 | 2 | 50 |
| **FRSM 33 - 36 M10/M12 hdg** | **558526** | M10 / M12 | 1 | 33 - 36 | 91 | 69 | 45 | 25 x 2.5 | M6 | 2.50 | 2 | 50 |
| **FRSM 40 - 45 M10/M12 hdg** | **558527** | M10 / M12 | 1 1/4 | 40 - 45 | 100 | 78 | 49 | 25 x 2.5 | M6 | 2.50 | 2 | 20 |
| **FRSM 45 - 52 M10/M12 hdg** | **558528** | M10 / M12 | 1 1/2 | 48 - 52 | 107 | 85 | 53 | 25 x 2.5 | M6 | 2.50 | 2 | 20 |
| **FRSM 53 - 58 M10/M12 hdg** | **558529** | M10 / M12 | – | 53 - 58 | 113 | 91 | 56 | 25 x 2.5 | M6 | 2.50 | 2 | 20 |
| **FRSM 60 - 65 M10/M12 hdg** | **558530** | M10 / M12 | 2 | 60 - 65 | 120 | 98 | 59 | 25 x 2.5 | M6 | 2.50 | 2 | 20 |
| **FRSM 73 - 78 M10/M12 hdg** | **558531** | M10 / M12 | 2 1/2 | 73 - 78 | 138 | 115 | 68 | 30 x 3.0 | M8 | 3.00 | 3 | 20 |
| **FRSM 79 - 85 M10/M12 hdg** | **558532** | M10 / M12 | – | 79 - 85 | 145 | 122 | 71 | 30 x 3.0 | M8 | 3.00 | 3 | 20 |
| **FRSM 88 - 93 M10/M12 hdg** | **558533** | M10 / M12 | 3 | 88 - 93 | 153 | 130 | 75 | 30 x 3.0 | M8 | 3.00 | 3 | 20 |
| **FRSM 100 - 106 M10/M12 hdg** | **558534** | M10 / M12 | – | 100 - 106 | 166 | 143 | 82 | 30 x 3.0 | M8 | 3.00 | 3 | 20 |
| **FRSM 108 - 116 M10/M12 hdg** | **558606** | M10 / M12 | 4 | 108 - 116 | 176 | 153 | 87 | 30 x 3.0 | M8 | 3.00 | 3 | 20 |
| **FRSM 124 - 129 M10/M12 hdg** | **558535** | M10 / M12 | – | 124 - 129 | 194 | 165 | 97 | 30 x 3.0 | M8 | 3.00 | 3 | 20 |
| **FRSM 131 - 137 M10/M12 hdg** | **558536** | M10 / M12 | – | 131 - 137 | 202 | 173 | 100 | 30 x 3.0 | M8 | 3.00 | 3 | 20 |
| **FRSM 138-145 M10/M12 hdg** | **558537** | M10 / M12 | 5 | 138 - 145 | 210 | 180 | 109 | 30 x 3.0 | M8 | 3.00 | 3 | 20 |
| **FRSM 156 - 162 M10/M12 hdg** | **558538** | M10 / M12 | – | 156 - 162 | 227 | 198 | 114 | 30 x 3.0 | M8 | 3.00 | 3 | 20 |
| **FRSM 165 - 171 M10/M12 hdg** | **558539** | M10 / M12 | 6 | 165 - 171 | 255 | 207 | 125 | 30 x 3.0 | M8 | 3.00 | 3 | 20 |
| **FRSM 188 - 194 M10/M12 hdg** | **558540** | M10 / M12 | 7 | 188 - 194 | 278 | 230 | 125 | 30 x 3.0 | M8 | 3.00 | 3 | 10 |
| **FRSM 196 - 203 M10/M12 hdg** | **558541** | M10 / M12 | – | 196 - 203 | 287 | 239 | 130 | 30 x 3.0 | M8 | 3.00 | 3 | 10 |
| **FRSM 205 - 214 M12/M16 hdg** | **558542** | M12 / M16 | – | 205 - 214 | 289 | 264 | 147 | 40 x 4.0 | M12 | 12.00 | 10 | 10 |
| **FRSM 219 - 225 M12/M16 hdg** | **558543** | M12 / M16 | 8 | 219 - 225 | 300 | 272 | 152 | 40 x 4.0 | M12 | 12.00 | 10 | 10 |
| **FRSM 244 - 250 M12/M16 hdg** | **558544** | M12 / M16 | – | 244 - 250 | 325 | 300 | 165 | 40 x 4.0 | M12 | 12.00 | 10 | 10 |
| **FRSM 267 - 273 M12/M16 hdg** | **558545** | M12 / M16 | 10 | 267 - 273 | 348 | 323 | 177 | 40 x 4.0 | M12 | 12.00 | 10 | 10 |
| **FRSM 297 - 304 M12/M16 hdg** | **558546** | M12 / M16 | – | 297 - 304 | 379 | 354 | 192 | 40 x 4.0 | M12 | 12.00 | 10 | 10 |
| **FRSM 305 - 316 M12/M16 hdg** | **558547** | M12 / M16 | – | 305 - 316 | 397 | 314 | 157 | 40 x 4.0 | M12 | 12.00 | 10 | 10 |
| **FRSM 320 - 328 M12/M16 hdg** | **558548** | M12 / M16 | 12 | 320 - 328 | 403 | 378 | 204 | 40 x 4.0 | M12 | 12.00 | 10 | 10 |
| **FRSM 348 - 356 M16 hdg** | **558549** | M16 | – | 348 - 356 | 480 | 403 | 213 | 50 x 5.0 | M16 | 8.00 | 20 | 1 |
| **FRSM 364 - 372 M16 hdg** | **558596** | M16 | – | 364 - 372 | 496 | 419 | 221 | 50 x 5.0 | M16 | 8.00 | 20 | 1 |
| **FRSM 400 - 409 M16 hdg** | **558597** | M16 | – | 400 - 409 | 533 | 456 | 240 | 50 x 5.0 | M16 | 8.00 | 20 | 1 |
| **FRSM 454 - 462 M16 hdg** | **558598** | M16 | – | 454 - 462 | 586 | 509 | 266 | 50 x 5.0 | M16 | 8.00 | 20 | 1 |
| **FRSM 500 - 508 M16 hdg** | **558599** | M16 | – | 500 - 508 | 632 | 555 | 290 | 50 x 5.0 | M16 | 8.00 | 20 | 1 |

# Channel system FUS hdg

The universal and complete mounting channel system for a wide range of applications





3D-frame constructions



Solid frame construction



## Applications

- Creation of secure, horizontal and vertical installations
- Fast and efficient fixing of pipelines and supporting structures
- For indoor and outdoor application.

## Certificates

R 120

R 30 MLAR

## Advantages

- The fire inspection report in line with MLAR/EN13501 guarantees indipendently tested functional safety.
- The basic channel geometry allows for the usage of the complete extensive range of accessories.
- The stamped teeth in the channel gives the sliding nuts a secure hold for high shear loads, e.g. for vertical installation.
- Different channel wall thicknesses allow for economical choices for installation.
- The scale on the mounting channels simplifies the cutting and positioning of the fixtures during installation.

## Properties

- Material: steel S235JR (material no. 1.0037) acc. to DIN EN 10025
- Zinc plating: hot-dip galvanised

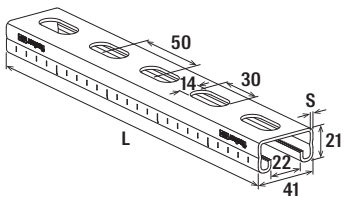


FUS 21

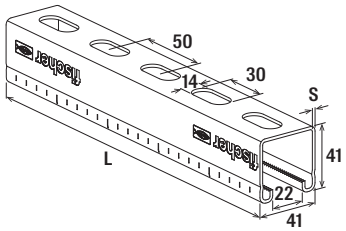


FUS 41

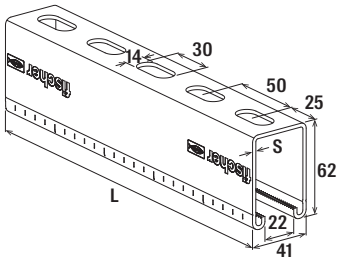


FUS 62

## Technical data

| Item | Item no. | Fire test report | Length L [mm] | Thickness S [mm] | Sales unit [pcs] |
|---|---|---|---|---|---|
| FUS 21/2.0 - 3 m hdg | 537653 | – | 3,000 | 2.0 | 1 |
| FUS 41/2.0 - 3 m hdg | 517426 | – | 3,000 | 2.0 | 1 |
| FUS 41/2.0 - 6 m hdg | 537656 | – | 6,000 | 2.0 | 1 |

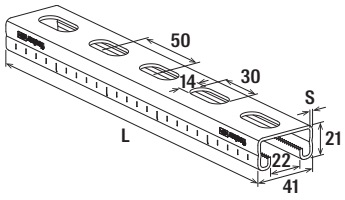


FUS 21

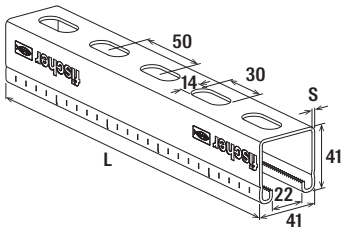


FUS 41

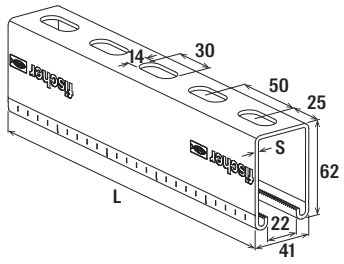


FUS 62

## Technical data

| Item | Item no. | Fire test report | Length L [mm] | Thickness S [mm] | Sales unit [pcs] |
|---|---|---|---|---|---|
| **FUS 41/2.5 - 6 m hdg** | **537658** | Yes | 6,000 | 2.5 | 1 |
| **FUS 62/2.5 - 3 m hdg** | **517427** | Yes | 3,000 | 2.5 | 1 |
| **FUS 62/2.5 - 6 m hdg** | **517428** | Yes | 6,000 | 2.5 | 1 |



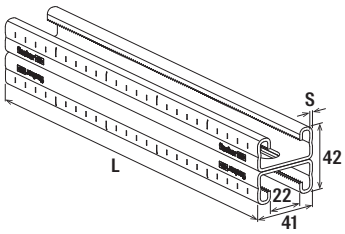


FUS 21D

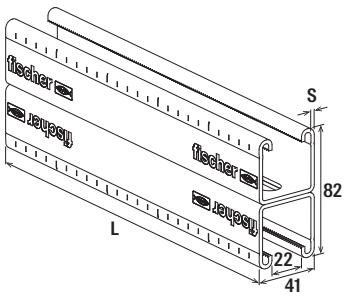


FUS 41D

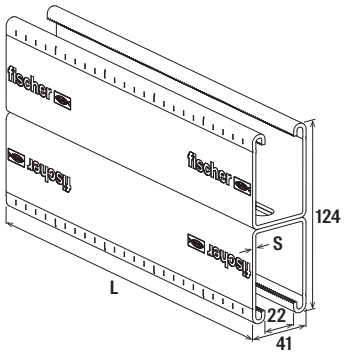


FUS 62D

## Technical data

| Item | Item no. | Length L [mm] | Thickness S [mm] | Sales unit [pcs] |
|---|---|---|---|---|
| **FUS 21D/2.0 - 3 m hdg** | **537659** | 3,000 | 2.0 | 1 |
| **FUS 21D/2.0 - 6 m hdg** | **537661** | 6,000 | 2.0 | 1 |
| **FUS 41D/2.5 - 6 m hdg** | **537662** | 6,000 | 2.5 | 1 |
| **FUS 62D/2.5 - 6 m hdg** | **537663** | 6,000 | 2.5 | 1 |

For load information under fire exposure, see chapter Basic knowledge.

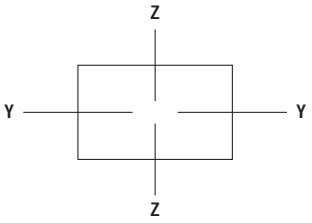


## Loads

| Item | Item no. | Profile weight [kg/m] | Channel cross section [$cm^2$] | Moment of inertia $I_y$ [$cm^4$] | Moment of inertia $I_z$ [$cm^4$] | Section modulus $W_y$ [$cm^3$] | Section modulus $W_z$ [$cm^3$] | Max. recommended static load for 1m length $F_{rec}$ [kN] | Max. recommended static load for 2m length $F_{rec}$ [kN] | Max. recommended static load for 3m length $F_{rec}$ [kN] | Sales unit [pcs] |
|---|---|---|---|---|---|---|---|---|---|---|---|
| FUS 21/2.0 - 3 m hdg | 537653 | 1.44 | 1.72 | 0.97 | 4.66 | 0.89 | 2.27 | 0.49 | 0.12 | 0.05 | 1 |
| FUS 41/2.0 - 3 m hdg | 517426 | 2.06 | 2.52 | 5.33 | 7.69 | 2.58 | 3.75 | 1.94 | 0.67 | 0.30 | 1 |
| FUS 41/2.0 - 6 m hdg | 537656 | 2.06 | 2.52 | 5.33 | 7.69 | 2.58 | 3.75 | 1.94 | 0.67 | 0.30 | 1 |
| FUS 41/2.5 - 6 m hdg | 537658 | 2.45 | 3.00 | 6.00 | 8.99 | 2.85 | 4.38 | 2.14 | 0.76 | 0.34 | 1 |
| FUS 62/2.5 - 3 m hdg | 517427 | 3.27 | 4.05 | 17.70 | 12.90 | 5.62 | 6.29 | 4.22 | 2.10 | 0.99 | 1 |
| FUS 62/2.5 - 6 m hdg | 517428 | 3.27 | 4.05 | 17.70 | 12.90 | 5.62 | 6.29 | 4.22 | 2.10 | 0.99 | 1 |
| FUS 21D/2.0 - 3 m hdg | 537659 | 2.87 | 3.44 | 5.49 | 9.31 | 2.61 | 4.54 | 1.96 | 0.69 | 0.31 | 1 |
| FUS 21D/2.0 - 6 m hdg | 537661 | 2.87 | 3.44 | 5.49 | 9.31 | 2.61 | 4.54 | 1.96 | 0.69 | 0.31 | 1 |
| FUS 41D/2.5 - 6 m hdg | 537662 | 4.89 | 6.00 | 35.01 | 17.90 | 8.76 | 8.78 | 6.58 | 3.28 | 1.96 | 1 |
| FUS 62D/2.5 - 6 m hdg | 537663 | 6.55 | 8.09 | 111.00 | 25.80 | 17.90 | 12.58 | 13.45 | 6.72 | 4.47 | 1 |

10

### Load case 1

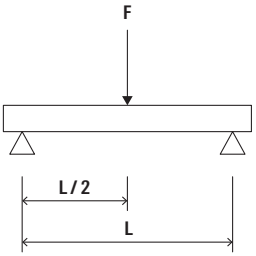


### Load case 2

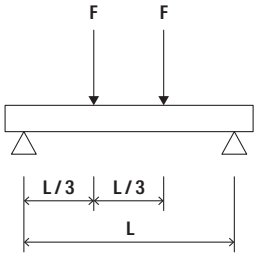


### Load case 3

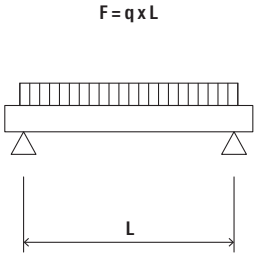


### FUS fvz 21/2,0

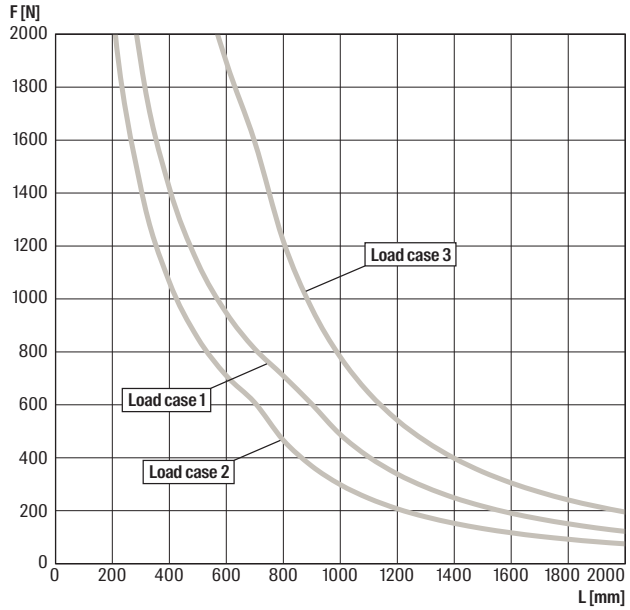


### FUS fvz 41/2,0

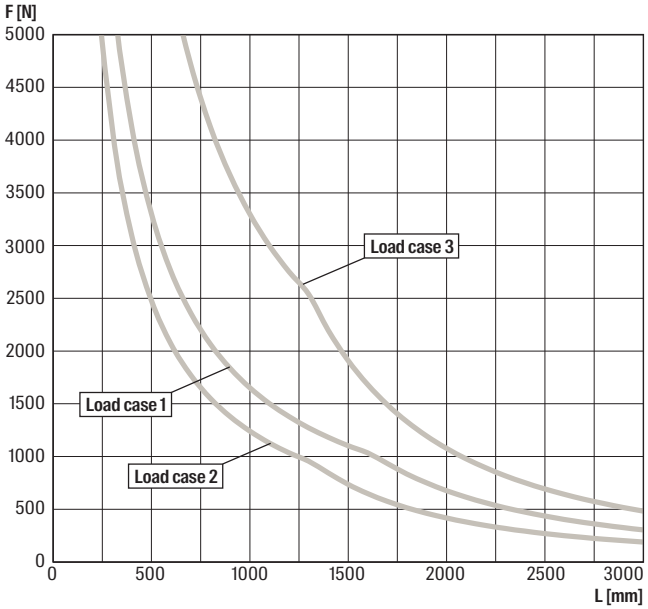


For the load curves, the permissible steel strain $\delta_{adm.}$ = 160 N/mm and the maximum deflection under load L/200 are not exceeded. Fixings and screw fastenings must be calculated accordingly.

## FUS fvz 41/2,5

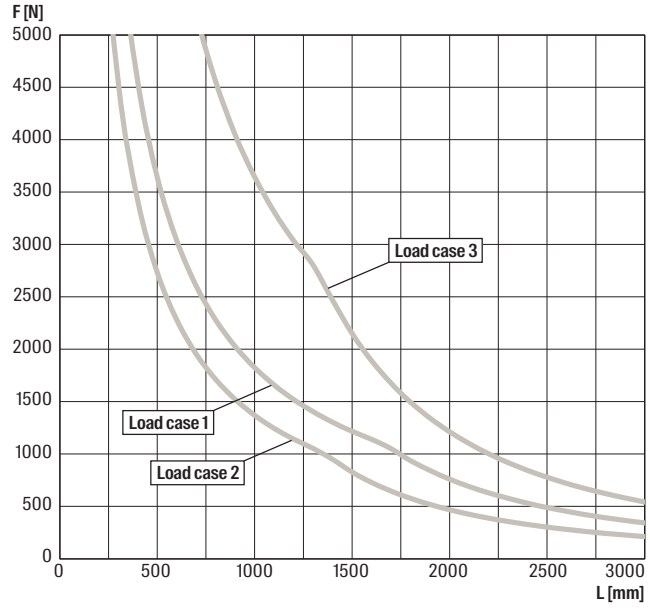


## FUS fvz 62/2,5

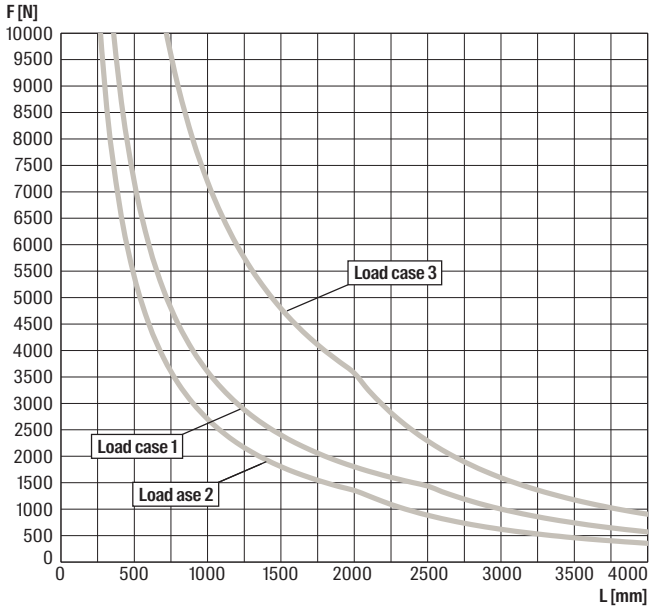


10

For the load curves, the permissible steel strain $\delta_{adm.}$ = 160 N/mm and the maximum deflection under load L/200 are not exceeded. Fixings and screw fastenings must be calculated accordingly.

## FUS fvz 21D/2,0

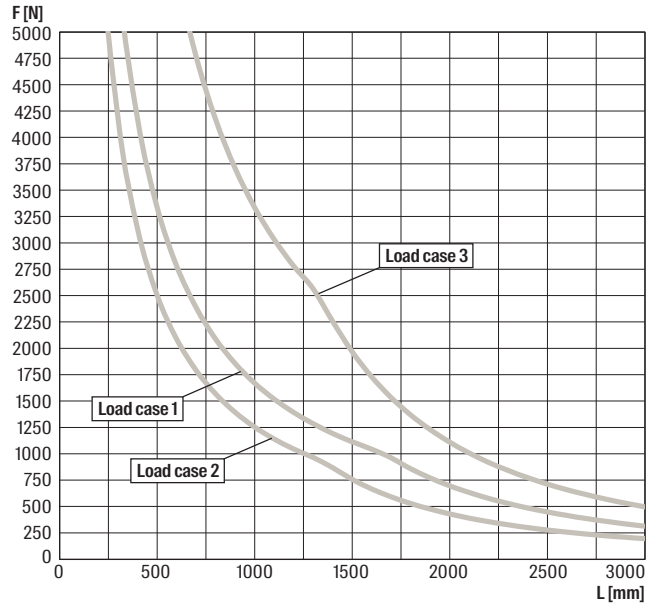


## FUS fvz 41D/2,5

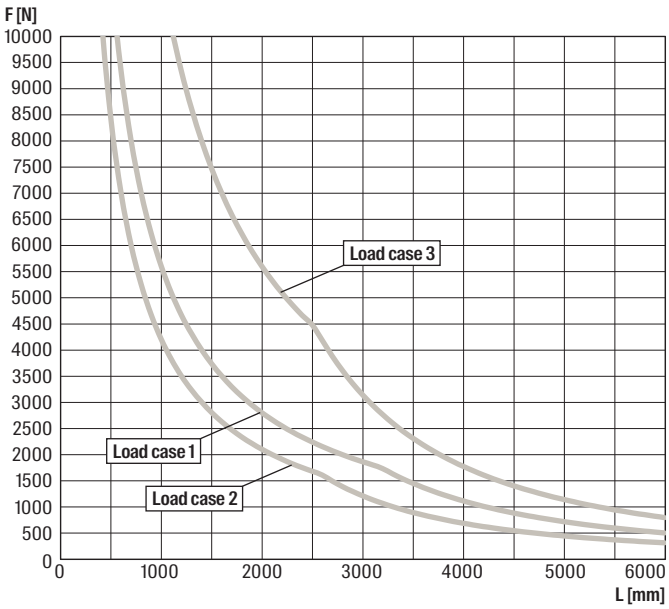


For the load curves, the permissible steel strain $\delta_{adm.}$ = 160 N/mm and the maximum deflection under load L/200 are not exceeded. Fixings and screw fastenings must be calculated accordingly.

## FUS fvz 62D/2,5

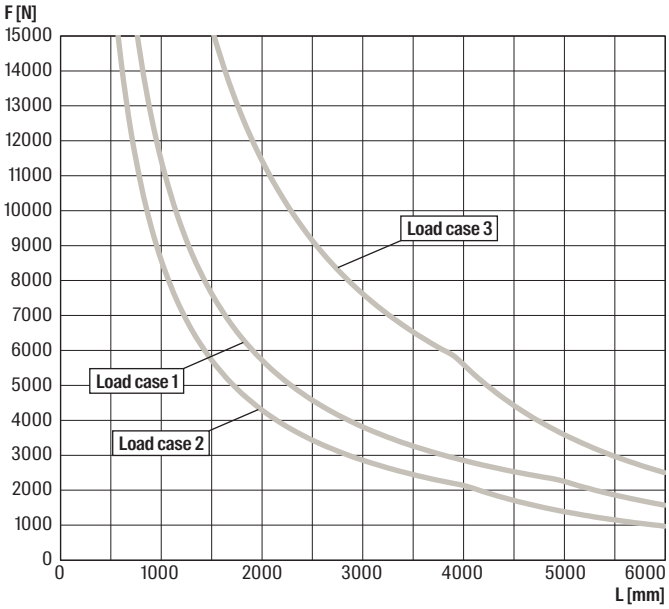




Bei den Belastungskurven wird die zulässige Stahlspannung $\delta_{zul}$ = 160 N/mm sowie die maximale Durchbiegung L/200 nicht überschritten. Die Befestigungen Dübel, Schrauben müssen den Belastungen entsprechend ausgelegt werden.

# Channel connector FUF OC and PFUF OC

Construction element - Channel connector FUF OC hdg and PFUF OC zl

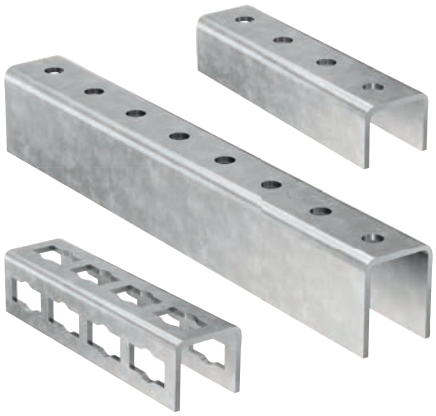

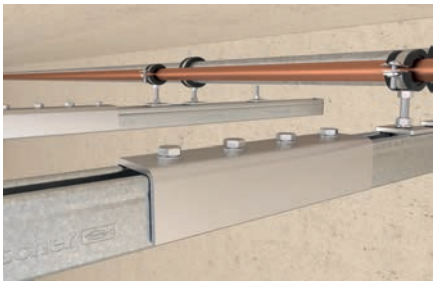

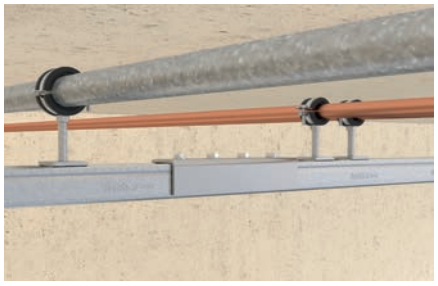



## Applications

- Connection and alignment of the channels.
- For indoor and outdoor application.

## Advantages

- The FUF OC connector in combination with FCN Clix P allows a simple and time-saving installation.
- The PFUF OC connector in combination with PFCN allows a simple and time-saving installation.

## Properties

- Material FUF OC: steel S235JR (material no. 1.0037) acc. to DIN EN 10025
- Zinc plating FUF OC: hot-dip galvanised
- Material PFUF OC: steel DD11 (material no. 1.0332) acc. to DIN EN 10111
- Zinc plating PFUF OC zl: zinclamella

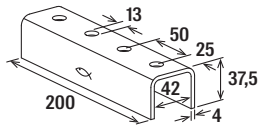


FUF OC 41

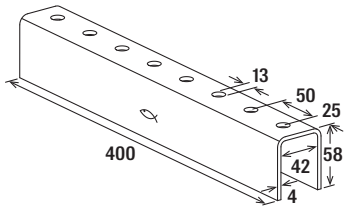


FUF OC 62

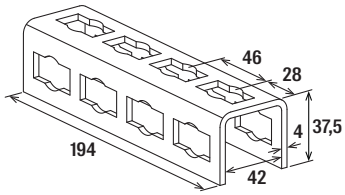


PFUF OC

## Technical data

| Item | Item no. | Length L [mm] | Sales unit [pcs] |
|---|---|---|---|
| **FUF OC 41 hdg** | **517415** | 200 | 20 |
| **FUF OC 62 hdg** | **537591** | 400 | 10 |
| **PFUF OC zl** | **542719** | 194 | 6 |

# Socket wrench FSK

FSK socket wrench SW 17 long, the solution for tightening in the FUS mounting channels






## Applications

- Installation of the fischer FUS channel system.
- Tightening anchor bolts and plugs.

## Advantages

- The socket wrench FSK fits perfectly through the open side of the
- FUS mounting channel.
- The two snap-in holes between the impact wrench insert and ½“ socket ensure increased connection accuracy.
- The long length of the socket wrench FSK allows it to be used for the FUS mounting channels 21, 41 and 62.

## Properties

- Material: quenched and tempered steel 42CrMo4 according to EN 10083-3 (material no. 1.7225)
- Coating: black phosphatized

## Technical data

| | Item no. | Length L [mm] | Width across nut SW [mm] | Drive | For profile | Sales unit [pcs] |
|---|---|---|---|---|---|---|
| **Item** | | | | | | |
| **FSK Socket wrench SW17-1/2“ long** | **563656** | 100 | 17 | 1/2“ / SW17 | FUS 21, 41, 62 | 1 |

# Channel connector FDCC zl

Channel connector FDCC zl - For easy preparation of FUS double channels



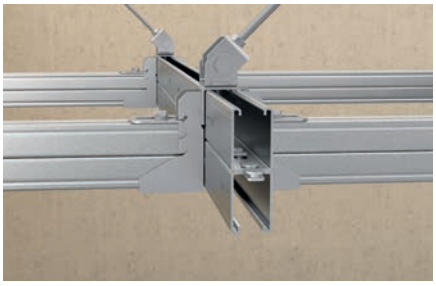

FUS double channel with channel connector



## Applications

- Easy construction of double channels made from the FUS channel assortment.
- Suitable for FUS channels FUS 41 and FUS 62 with thickness 2,0 and 2,5 mm.
- The connection of two single channels is made with the channel connector inside the channel slots.
- Each double channel has to be equipped with an FDCC at both ends and additional FDCCs in the given installation distance as per load chart.
- For indoor and outdoor application.

## Advantages

- Easy connection of single channels backside to backside to build double channels.
- Simple solution to create individual double channels on job site.

## Properties

- Material base plate: JIS G3131-SPHE (similar to DD13 acc. to DIN EN 10111, material no. 1.0335)
- Material screw: steel grade 8.8
- Surface coating: zinclamella

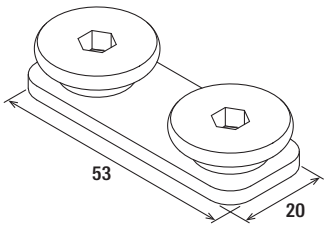


FDCC

## Technical data

| Item | Item no. | Thread A | Drive | Tightening torque $T_{inst}$ [Nm] | Sales unit [pcs] |
|---|---|---|---|---|---|
| **FDCC zl** | **557278** | M10 | Hexagon socket 5 mm | 25 | 100 |

## Load case 1

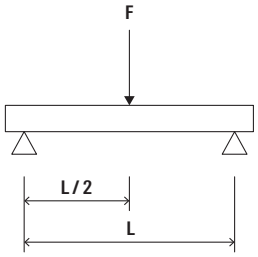


## FUS 41D/2,0 - 2,5

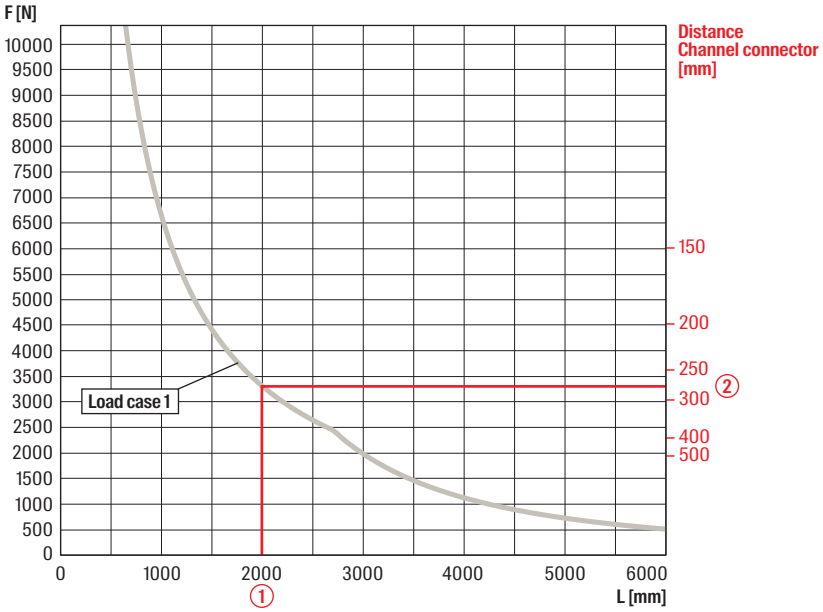


①Length of channel, i.e. 2000 mm for loadcase 1 (single load centric)
②Distance of channel connector (for intermediate values use the lower value, i.e. 250 mm)

## FUS 62D/2,5

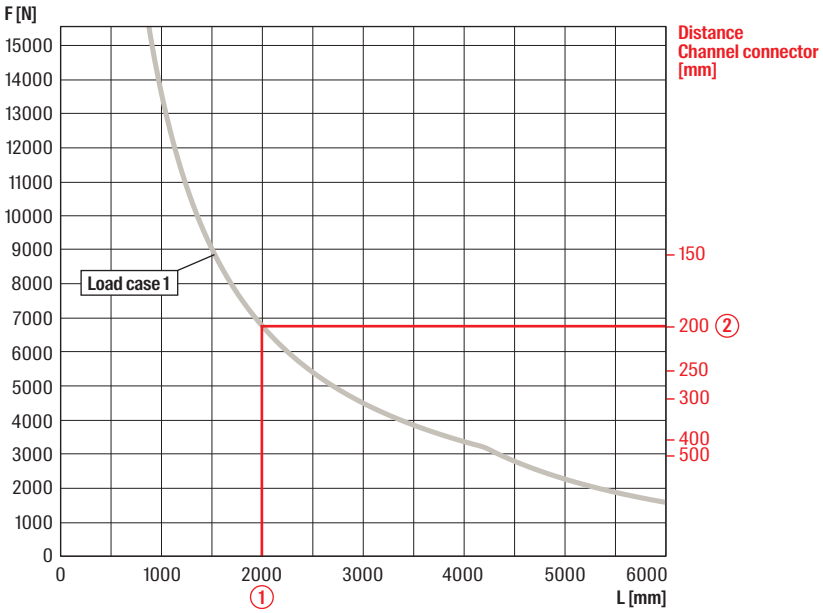


①Length of channel, i.e. 2000 mm for loadcase 1 (single load centric)
②Distance of channel connector (for intermediate values use the lower value)

# Cantilever arm FCA hdg

Hot-dip galvanised FUS profiles with welded base plate for direct mounting on the base material



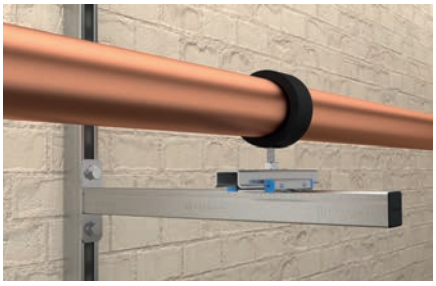

Refrigerant pipe clamp on sliding element



Heavy pipe on cantilever



## Applications

- Quick and easy installation of pipelines, for example, along the wall.
- For indoor and outdoor application.

## Certificates

R 120

R 30 MLAR

## Advantages

- The fire inspection report in line with MLAR/EN13501 guarantees indipendently tested functional safety.
- The graduated range of lengths allows for an ideal adaptation to the application.
- The arms solid base plate offers a secure hold for load-bearing construction.
- The base plate's long slots, which are at 90° to one another, allow the arm to be easily aligned.
- The stamped teeth in the channel give the sliding nuts a secure hold for high shear loads, e.g. for vertical installation.

## Properties

- Material: steel S235JR (material no.1.0037) acc. to DIN EN 10025
- Zinc plating: hot-dip galvanised

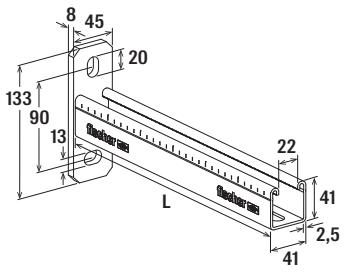


FCA 41/2.5

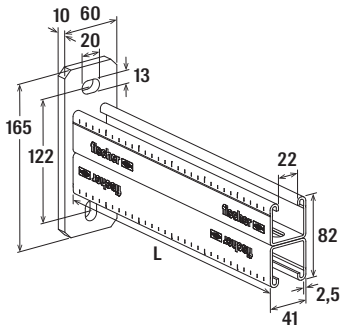


FCA 41D/2.5

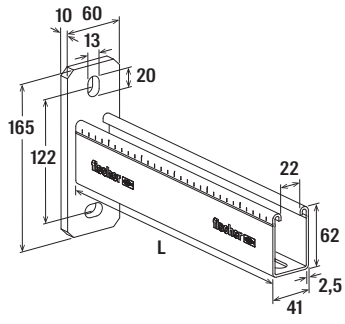


FCA 62/2.5

## Technical data

| Item | Item no. | Fire test report | Profile | Length L [mm] | Sales unit [pcs] |
|---|---|---|---|---|---|
| FCA 41/2.5 - 300 hdg | 517411 | Yes | 41 / 2.5 | 300 | 1 |
| FCA 41/2.5 - 450 hdg | 517412 | Yes | 41 / 2.5 | 450 | 1 |
| FCA 41/2.5 - 600 hdg | 517413 | Yes | 41 / 2.5 | 600 | 1 |
| FCA 41/2.5 - 750 hdg | 517414 | Yes | 41 / 2.5 | 750 | 1 |

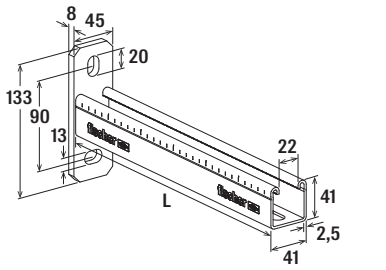


FCA 41/2.5

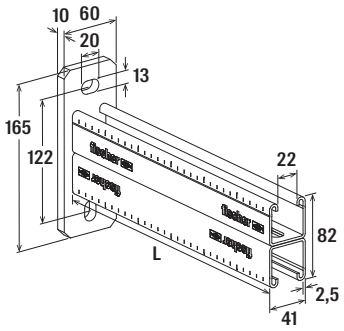


FCA 41D/2.5

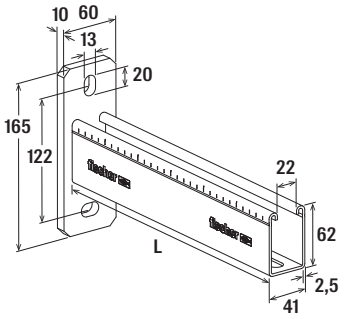


FCA 62/2.5

## Technical data

| Item | Item no. | Fire test report | Profile | Length L [mm] | Sales unit [pcs] |
|---|---|---|---|---|---|
| FCA 62/2.5 - 1000 hdg | 538015 | Yes | 62 / 2.5 | 1,000 | 1 |
| FCA 41D/2.5 - 750 hdg | 538016 | – | 41D / 2.5 | 750 | 1 |
| FCA 41D/2.5 - 1.000 hdg | 538017 | – | 41D / 2.5 | 1,000 | 1 |

For load information under fire exposure, see chapter Basic knowledge.

## Loads

| Item | Item no. | Max. recommended static load load case 1 $F_{rec}$ [kN] | Max. recommended static load load case 2 $F_{rec}$ [kN] | Max. recommended static load load case 3 $F_{rec}$ [kN] | Sales unit [pcs] |
|---|---|---|---|---|---|
| FCA 41/2.5 - 300 hdg | 517411 | 1.80 | 0.90 | 1.80 | 1 |
| FCA 41/2.5 - 450 hdg | 517412 | 1.20 | 0.60 | 1.20 | 1 |
| FCA 41/2.5 - 600 hdg | 517413 | 0.90 | 0.45 | 0.90 | 1 |
| FCA 41/2.5 - 750 hdg | 517414 | 0.72 | 0.36 | 0.72 | 1 |
| FCA 62/2.5 - 1000 hdg | 538015 | 1.25 | 0.62 | 1.25 | 1 |
| FCA 41D/2.5 - 750 hdg | 538016 | 2.50 | 1.25 | 2.50 | 1 |
| FCA 41D/2.5 - 1.000 hdg | 538017 | 1.90 | 0.64 | 1.90 | 1 |

### Load case 1

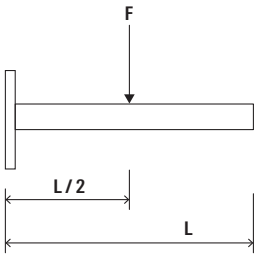


### Load case 2

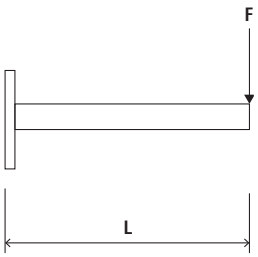


### Load case 3

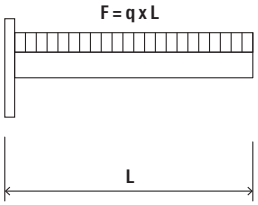

## FCA 41

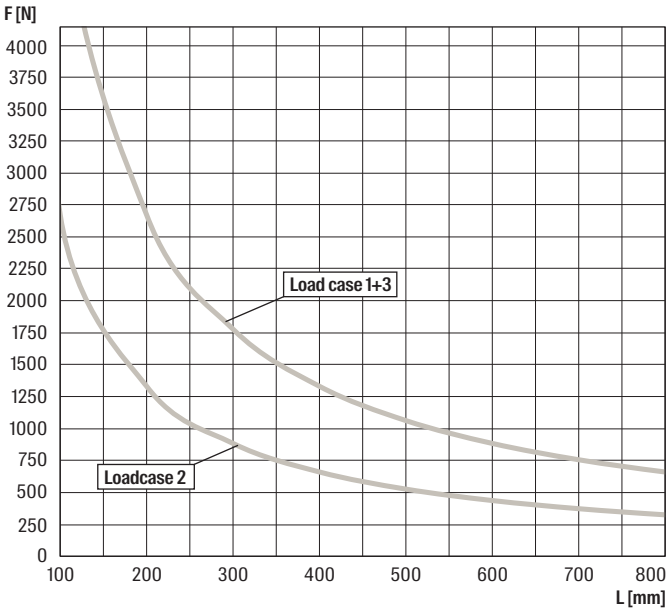


## FCA 62

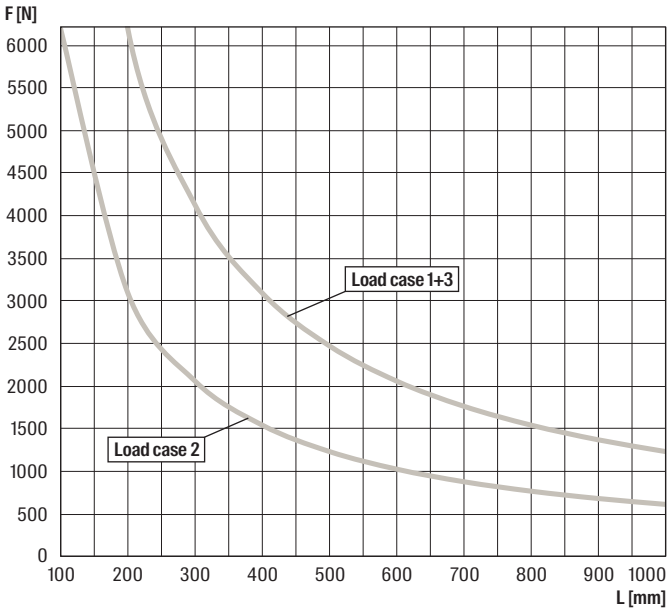


For the load curves, the permissible steel strain $\delta_{adm.}$ = 160 N/mm and the maximum deflection under load L/150 are not exceeded. Load values of the cantilever arms under consideration of the load capacity of the base plate. Fixings and screw fastenings must be calculated accordingly. The load curves are valid for all material thicknesses of the FCA brackets.

## FCA 41D

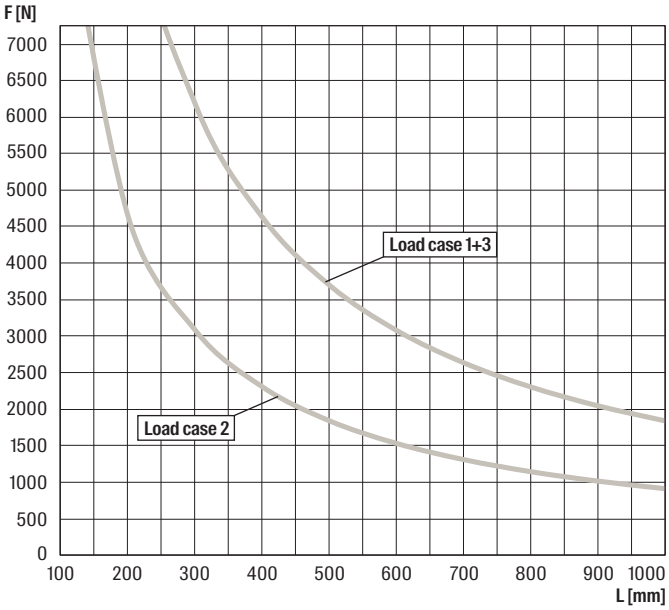


For the load curves, the permissible steel strain $\delta_{adm.}$ = 160 N/mm and the maximum deflection under load L/150 are not exceeded. Load values of the cantilever arms under consideration of the load capacity of the base plate. Fixings and screw fastenings must be calculated accordingly. The load curves are valid for all material thicknesses of the FCA brackets.

# Large cantilever arm FCAM hdg

The large cantilever arm for heavy loads





Stiff pipe connection with base plate on cantilever arm



## Applications

- Quick and easy installation of pipelines with heavy loads.
- For indoor and outdoor application.

## Advantages

- The robust construction, consisting of a basic and a support profile, allows the bearing of heavy loads.
- The graduated range of lengths allows an ideal adaptation to the application.
- The base plate's long slots, which are at 90° to one another, allow the arm to be easily aligned.
- The stamped teeth in the channel give the sliding nuts a secure hold forhigh shear loads, e.g. for vertical installation.

## Properties

- Material: steel S235JR (material no. 1.0037) acc. to DIN EN 10025
- Zinc plating: hot-dip galvanised

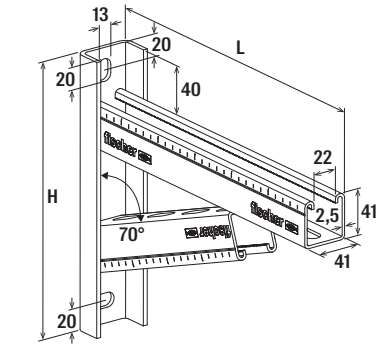


FCAM

## Technical data

| Item | Item no. | Length L [mm] | Height H [mm] | Sales unit [pcs] |
|---|---|---|---|---|
| FCAM 300 hdg | 538018 | 300 | 246 | 1 |
| FCAM 400 hdg | 538019 | 400 | 270 | 1 |
| FCAM 500 hdg | 538020 | 500 | 284 | 1 |
| FCAM 600 hdg | 538021 | 600 | 319 | 1 |
| FCAM 700 hdg | 538022 | 700 | 343 | 1 |

## Loads

| Item | Item no. | Max. recommended static load load case 1 $F_{rec}$ [kN] | Max. recommended static load load case 2 $F_{rec}$ [kN] | Max. recommended static load load case 3 $F_{rec}$ [kN] | Sales unit [pcs] |
|---|---|---|---|---|---|
| FCAM 300 hdg | 538018 | 7.00 | 3.70 | 7.00 | 1 |
| FCAM 400 hdg | 538019 | 7.50 | 2.80 | 7.50 | 1 |
| FCAM 500 hdg | 538020 | 6.50 | 2.30 | 6.50 | 1 |
| FCAM 600 hdg | 538021 | 6.00 | 1.90 | 6.00 | 1 |
| FCAM 700 hdg | 538022 | 5.50 | 1.30 | 5.50 | 1 |

### Load case 1

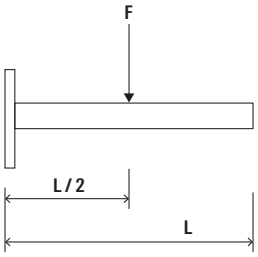


### Load case 2

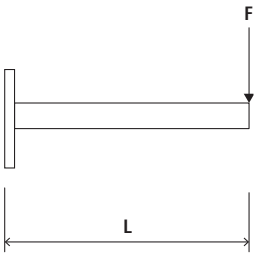


### Load case 3

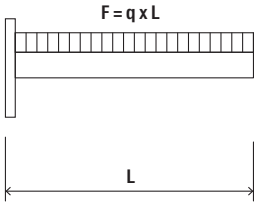

# Cover cap FEC

The form-flush cover cap, tailored to the FUS channel profiles for a safe termination





## Applications

- Closing for channel FUS and cantilever arms FCA and large cantilever arms FCAM.

## Advantages

- Suitable for channels FUS 21, FUS 41, FUS 62 and cantilever arms FCA and FCAM.

## Properties

- Material: PE polyethylene, colour black

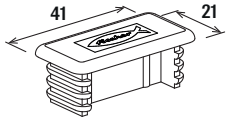


FEC 21 B

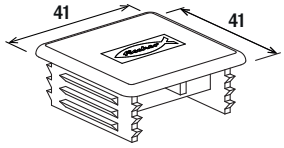


FEC 41 B

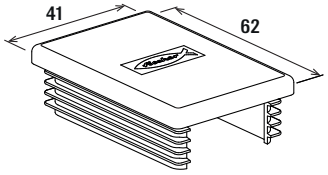


FEC 62 B

## Technical data

| Item | Item no. | For profile | Material | Sales unit [pcs] |
|---|---|---|---|---|
| **FEC 21 B** | **077357** | 41/21 | Polyethylene, black | 100 |
| **FEC 41 B** | **077355** | 41/41 | Polyethylene, black | 100 |
| **FEC 62 B** | **505551** | 41/62 | Polyethylene, black | 100 |

# Push-through connector PFCN 41 zl

Push-through connector for the quickest and easiest connection of FUS profiles



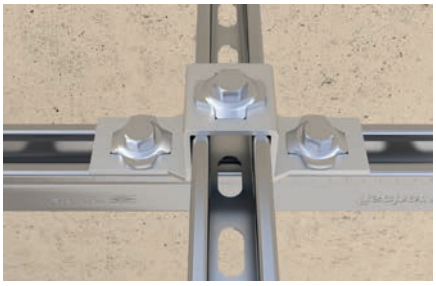

Cross connection on channel



Cantilever with saddle flange



## Applications

- Connection of FUS channels and construction elements by push-through principle.
- Universal fitting for all push-through connection elements and FUS profiles.
- For indoor and outdoor application.

## Advantages

- The correct fit of the push-through connector and connection elements allows the quickest and easiest channel connection.
- The spring effect of the PFCN in set state guarantees a simple and precise positioning in the channel.
- The teeth on the push through connector provide a secure hold in the FUS channel.
- Installation by rotating 90° enables generally the post-installation in set channels.

## Properties

- Material cap: steel DD11 (material no. 1.0332) acc. to DIN EN 10111
- Material sliding nut: steel S420MC, EN 10149-2
- Material hexagon screw: 8.8 M10-28, DIN 933
- Material plastic parts: polypropylene
- Coating: zinclamella

## Installation PFCN

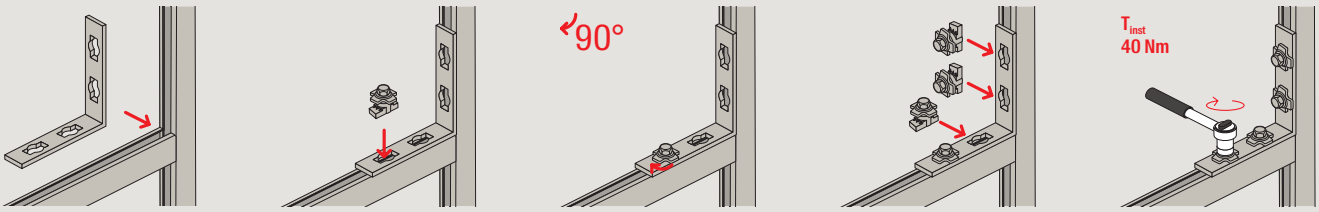

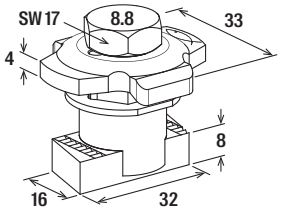


PFCN

## Technical data

| | Item no. | Thread<br>A | Sales unit<br>[pcs] |
|---|---|---|---|
| **Item** | | | |
| **PFCN 41 zl** | **542733** | M10 | 50 |



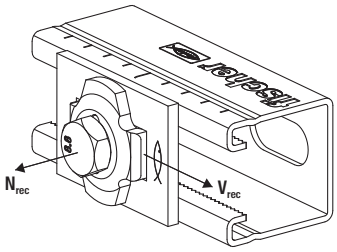


PFCN

## Loads

| | Item no. | Max. recommended tension load for FUS 2,0 mm<br>$N_{rec}$<br>[kN] | Max. recommended tension load for FUS 2,5 mm<br>$N_{rec}$<br>[kN] | Max. recommended shear load for FUS 2,0 mm<br>$V_{rec}$<br>[kN] | Max. recommended shear load for FUS 2,5 mm<br>$V_{rec}$<br>[kN] | Tightening torque for screw grade ≥ 8.8<br>$T_{inst}$<br>[Nm] | Sales unit<br>[pcs] |
|---|---|---|---|---|---|---|---|
| **Item** | | | | | | | |
| **PFCN 41 zl** | **542733** | 5.0 | 7.0 | 4.0 | 4.0 | 40 | 50 |

# Saddle flange PSF zl

Construction element - Saddle flange PSF zl





Pipe installation in escape route



Cantilever with saddle flange



## Applications

- Stable construction of connections between channels and building structures for the push-through system.
- For indoor and outdoor application.

## Advantages

- The perfect-fit saddle allows a simple installation by inserting the mounting channels.
- The saddle flange‘s stable design offers a secure hold for a load-bearing construction.

## Properties

- Material: steel DD11 (material no. 1.0332) acc. to DIN EN 10111
- Coating: zinclamella

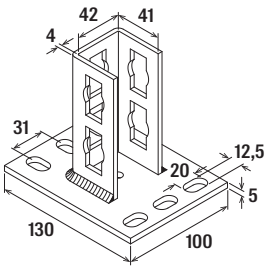


PSF 41

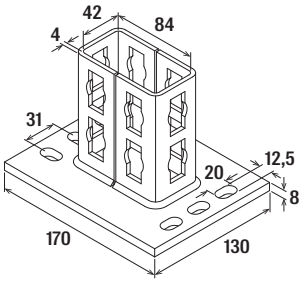


PSF 82

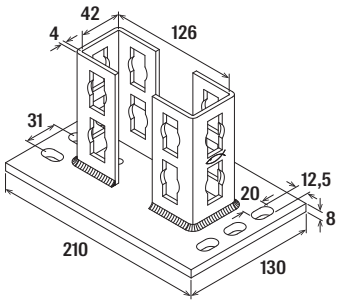


PSF 124

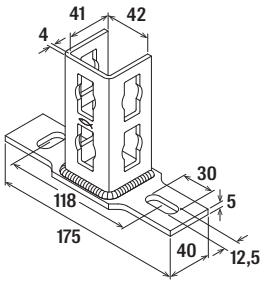


PSFQ 41

10

## Technical data

| Item | Item no. | For profile | Sales unit [pcs] |
|---|---|---|---|
| **PSF 41 zl** | **542715** | 21D, 41, 62 | 10 |
| **PSF 82 zl** | **542716** | 41 | 5 |
| **PSF 124 zl** | **542718** | 62 | 5 |
| **PSFQ 41 zl** | **542723** | 41 | 10 |

See push-through connector PFCN 41 zl for loads

# Universal bracket PUWS zl

Construction element - Universal bracket PUWS zl

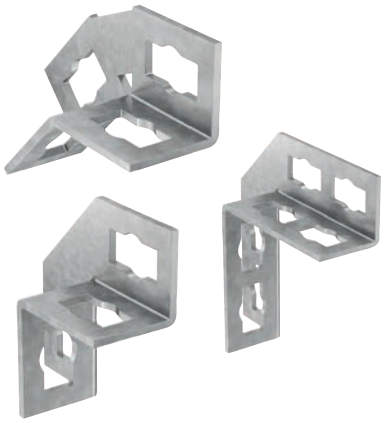



3D-frame constructions



## Applications

- Reinforcement of supporting structures for the push-through system.
- For indoor and outdoor application.

## Advantages

- The universal brackets for the connection of FUS channels gives a supporting structure, great stability and safety (we recommend using in pairs).

## Properties

- Material: steel DD11 (material no. 1.0332) acc. to DIN EN 10111
- Coating: zinclamella

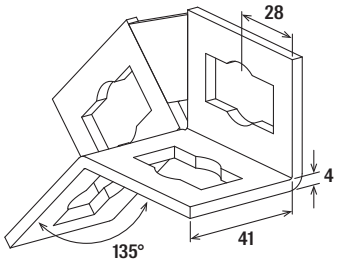


PUWS 2 x 2/135°

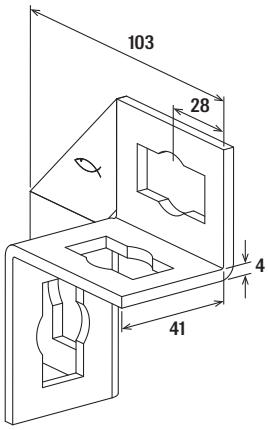


PUWS 2 x 2

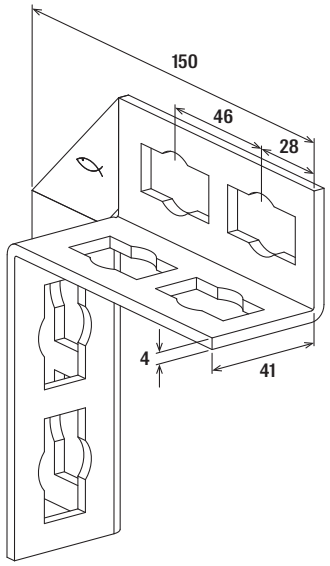


PUWS 4 x 4

10

## Technical data

| Item | Item no. | | Sales unit [pcs] |
|---|---|---|---|
| **PUWS 2 x 2/135° zl** | **542708** | | 10 |
| **PUWS 2 x 2 zl** | **542709** | | 10 |
| **PUWS 4 x 4 zl** | **542710** | | 8 |

See push-through connector PFCN 41 zl for loads

# Angle bracket PWK zl

Construction element - Angle bracket PWK zl





Solid frame construction



Solid frame construction



## Applications

- Reinforcement in the push-through system and for lateral fixing to the substrate.
- For indoor and outdoor application.

## Advantages

- The stable angle bracket ensures a supporting structure with a very high level of stability and safety.

## Properties

- Material: steel DD11 (material no. 1.0332) acc. to DIN EN 10111
- Coating: zinclamella

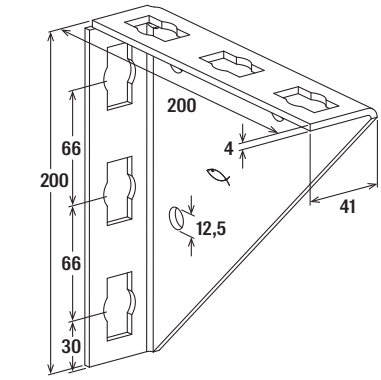


PWK 200

## Technical data

| Item | Item no. | | Sales unit [pcs] |
|---|---|---|---|
| PWK 200/200 zl | 542720 | | 15 |

See push-through connector PFCN 41 zl for loads

# Variable bracket PVB zl

Construction element – Variable bracket PVB zl





Massive bracing of cantilever arm



## Applications

- Variable angular positioning of profile support in the push-through system.
- Bracket for installation with FUS channels from 0° to 180°.
- For indoor and outdoor application.

## Advantages

- The design of the variable bracket PVB zl enables the fixation of mounting channels at an angle of 0° to 180°.
- The holes in the connecting element make it compatible with the push-through connector PFCN zl.
- The punched holes in the base plate allow the direct fixing onto a wall, ceiling or onto a mounting channel by screw or anchor.

## Properties

- Material: steel DD11 (material no. 1.0332) acc. to DIN EN 10111
- Coating: zinclamella

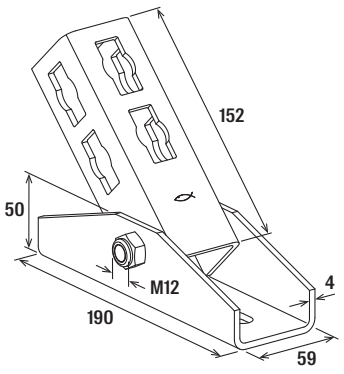


PVB

## Technical data

| Item | Item no. | | Sales unit [pcs] |
|---|---|---|---|
| PVB zl | 542722 | | 5 |

See push-through connector PFCN 41 zl for loads

# Bracing elements PSAE zl

Construction elements – Bracing elements PSAE zl 300 and 500





Supported channel



## Applications

- Elements for stable cantilever constructions made of FUS channels or FCA cantilever arms with push-through connector PFCN zl.
- For indoor and outdoor application.

## Advantages

- The stable bracing element PSAE zl givesthe supporting structure very high stability and safety.
- The holes in the base plate of the element make it compatible with the push-through connector PFCN zl.
- An additional PU-washer allows for fixing of elements with formholes directly onto a wall or ceiling by anchor or screw.

## Properties

- Material: steel DD11 (material no. 1.0332) acc. to DIN EN 10111
- Coating: zinclamella

## Installation PSAE

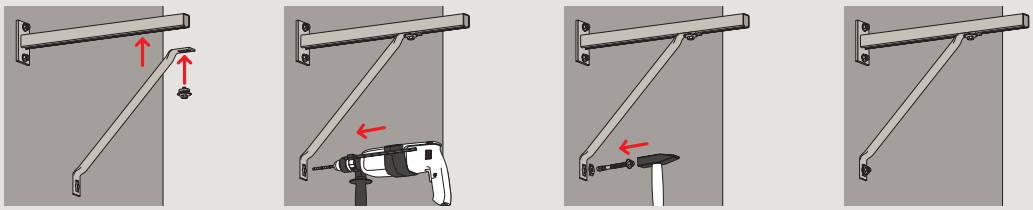

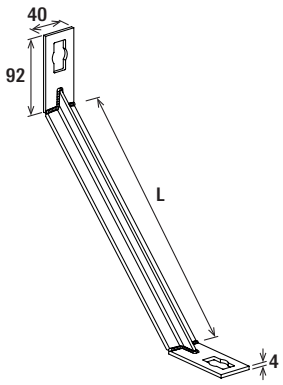


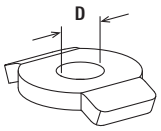


PU

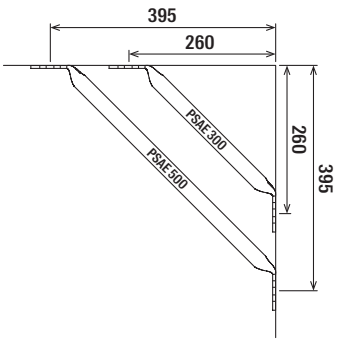


PSAE 300 and PSAE 500

## Technical data

| Item | Item no. | Length L [mm] | Hole-Ø D [mm] | Sales unit [pcs] |
|---|---|---|---|---|
| **PSAE 300 zl** | **542726** | 300 | – | 10 |
| **PSAE 500 zl** | **542727** | 500 | – | 10 |
| **PU 10.5 zl** | **542728** | – | 10.5 | 50 |
| **PU 12.5 zl** | **542729** | – | 12.5 | 50 |

See push-through connector PFCN 41 zl for loads

# Bracket PFFF zl

Construction elements - Brackets PFFF zl

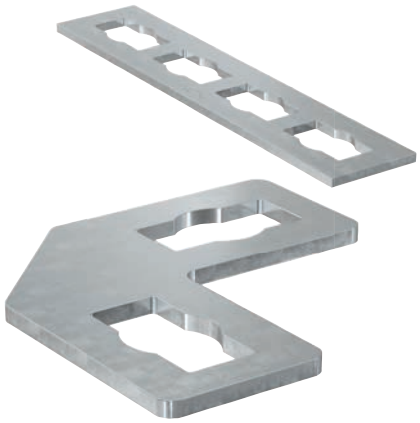



Waste water pipe



## Applications

- Arrangement of simple channel constructions in the push-through system.
- For indoor and outdoor application.

## Advantages

- The holes in the connecting elements make them compatible with the push-through connector PFCN 41 zl.
- Simple creation of channel structures in conjunction with FUS channels and PFCN 41 zl.
- Quick installation by rotating the PFCN 41 zl in the channel by 90° clockwise.

## Properties

- Material: steel DD11 (material no. 1.0332) acc. to DIN EN 10111
- Coating: zinclamella

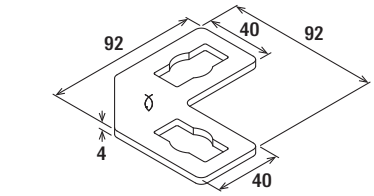


PFFF 2L

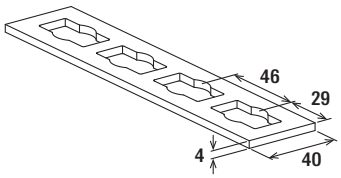


PFFF 4L

## Technical data

| Item | Item no. | | Sales unit [pcs] |
|---|---|---|---|
| PFFF 2L zl | 542721 | | 20 |
| PFFF 4L zl | 542725 | | 10 |

See push-through connector PFCN 41 zl for loads

# Bracket PFAF zl

Construction elements - Brackets PFAF zl



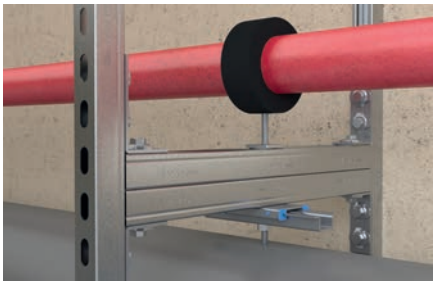

Frame constructions

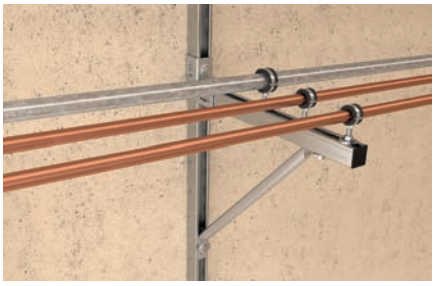

Lightweight installation on cantilever



## Applications

- Arrangement of simple channel constructions in the push-through system.
- For indoor and outdoor application.

## Advantages

- The holes in the connecting elements make them compatible with the push-through connector PFCN 41 zl.
- Simple creation of channel structures in conjunction with FUS channels and PFCN 41 zl.
- Quick installation by rotating the PFCN 41 zl in the channel by 90° clockwise.

## Properties

- Material: steel DD11 (material no. 1.0332) acc. to DIN EN 10111
- Coating: zinclamella

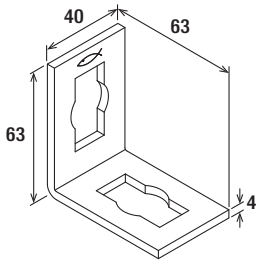


PFAF 2

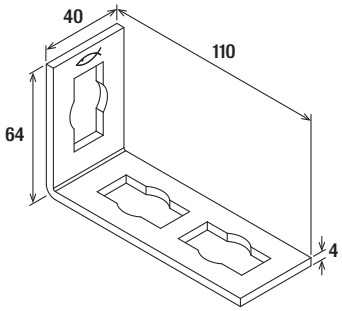


PFAF 3

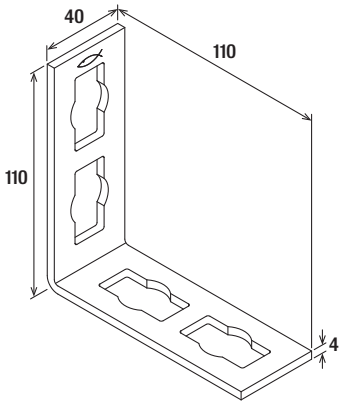


PFAF 4

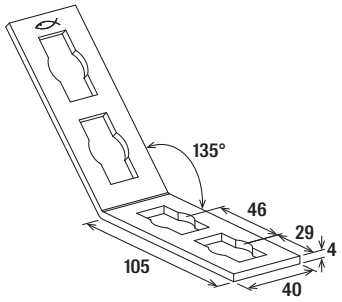


PFAF 4/135°



## Technical data

| Item | Item no. | | Sales unit [pcs] |
|---|---|---|---|
| **PFAF 2 zl** | **542711** | | 25 |
| **PFAF 3 zl** | **542712** | | 25 |
| **PFAF 4/135° zl** | **542713** | | 20 |
| **PFAF 4 zl** | **542724** | | 25 |

See push-through connector PFCN 41 zl for loads

# Bracket PFUF zl

Construction elements - Brackets PFUF zl

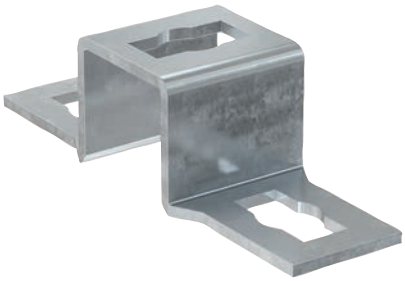

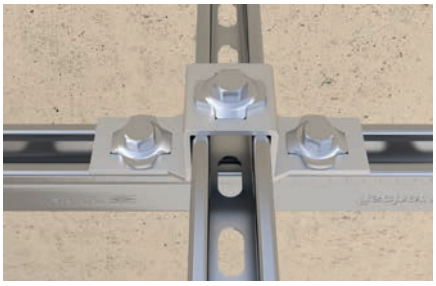

Cross connection on channel

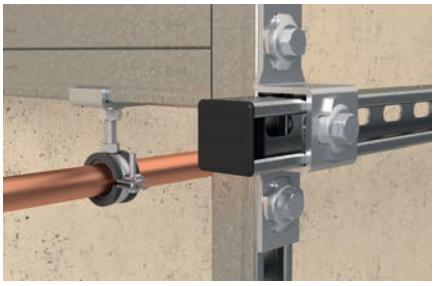

Cross connection on channel



## Applications

- Connecting element for the production of multi-dimensional constructions with FUS channels using push-through connector PFCN zl.
- For indoor and outdoor application.

## Advantages

- The various shapes of the construction elements offer flexibility during the installation of channel constructions.
- The perforation of the construction elements ensures the system fit with the push-through channel nut PFCN 41 zl.
- Simple creation of channel structures in conjunction with FUS channels and PFCN 41 zl.
- Quick installation by rotating the PFCN 41 zl in the channel by 90° clockwise.

## Properties

- Material: steel DD11 (material no. 1.0332) acc. to DIN EN 10111
- Coating: zinc lamella coating

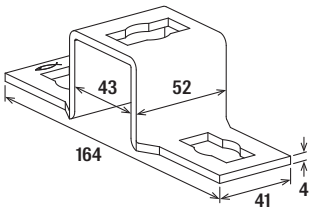


PFUF 41

## Technical data

| Item | Item no. | | Sales unit [pcs] |
|---|---|---|---|
| PFUF 41 zl | 542714 | | 25 |

See push-through connector PFCN 41 zl for loads

# Bracket PFUF D zl

Construction elements - Bracket PFUF 2D, 3D and 4D



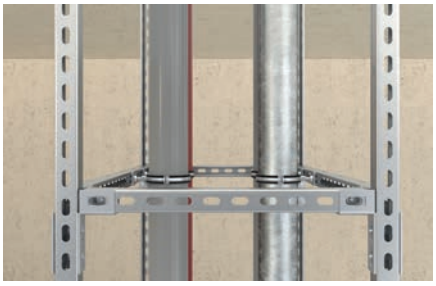

Frame constructions



Frame constructions



## Applications

- Connecting elements for multidimensional constructions with FUS channels connected by the push-through connector PFCN zl.
- For indoor and outdoor application.

## Advantages

- The multidimensional PFUF zl construction elements enable multidimensional constructions in a very short time.
- The holes in the construction elements make them compatible with the push-through connector PFCN zl.
- Simple creation of channel structures in conjunction with FUS channels and PFCN 41 zl.
- Quick installation by rotating the PFCN 41 zl in the channel by 90° clockwise.
- The different shapes of the construction elements generate a high flexibility for channel constructions.

## Properties

- Material: steel DD11 (material no. 1.0332) acc. to DIN EN 10111
- Coating: zinclamella

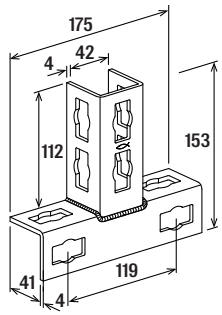


PFUF 2D

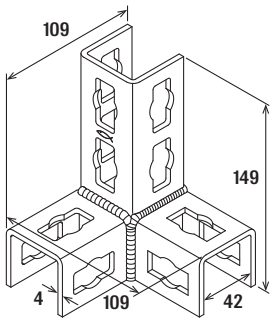


PFUF 3DL

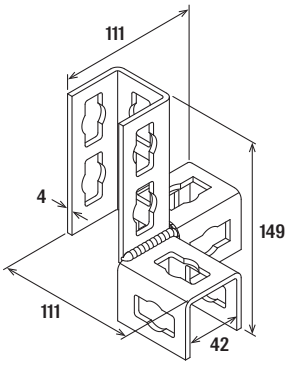


PFUF 3DR

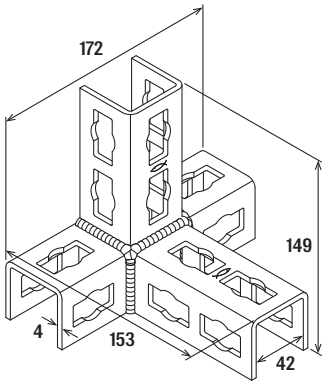


PFUF 4D

10

## Technical data

| Item | Item no. | | Sales unit [pcs] |
|---|---|---|---|
| **PFUF 2D zl** | **563149** | | 10 |
| **PFUF 3DL zl** | **542730** | | 10 |
| **PFUF 3DR zl** | **542731** | | 10 |
| **PFUF 4D zl** | **542732** | | 10 |

See push-through connector PFCN 41 zl for loads

# Channel nut FCN Clix P hdg

Channel nut for quick and easy fixing in FUS profiles



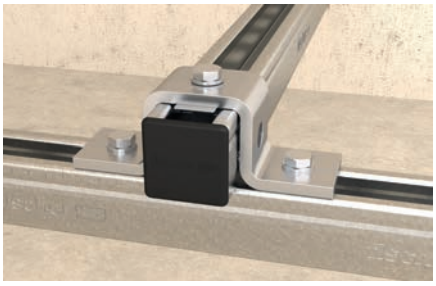

Cross connection



## Applications

- Connection of FUS channels and fixtures.
- For indoor and outdoor application.

## Certificates

R 120

R 30 MLAR

## Advantages

- The sliding nut design allows for quick and easy setting in the channel.
- The spring effect of the plastic clasp guarantees simple and precise positioning in the channel.
- The FCN Clix P's flat plastic mounting with wings offers a good hold and allows the fixtures to be conveniently mounted.
- The serration on the sliding nut provides a secure hold in the FUS channel.
- Installation by rotating 90° enables post-installation in installed channel.

## Properties

- Material: steel S235JR (material no. 1.0037) acc. to DIN EN 10025, plastic Nylon PA6
- Zinc plating: hot-dip galvanised

## Installation FCN Clix P

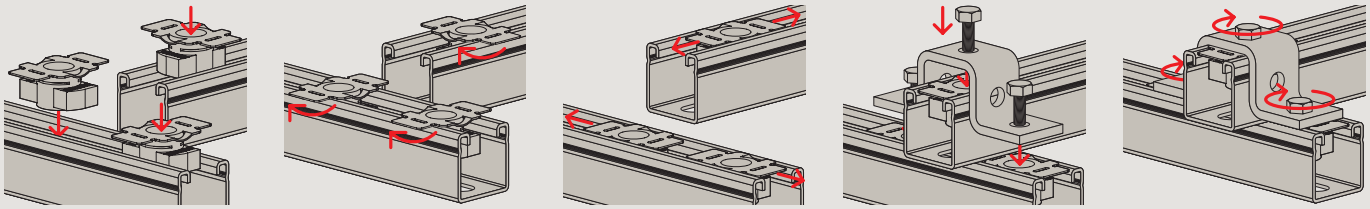

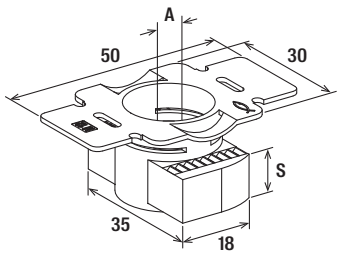


FCN Clix P

## Technical data

| Item | Item no. | Fire test report | Thread A | Thickness S [mm] | Sales unit [pcs] |
|---|---|---|---|---|---|
| FCN Clix P 8 hdg. | 559765 | No | M8 | 6.0 | 50 |
| FCN Clix P 10 hdg | 559766 | Yes | M10 | 8.0 | 50 |
| FCN Clix P 12 hdg | 559767 | Yes | M12 | 9.5 | 50 |

10

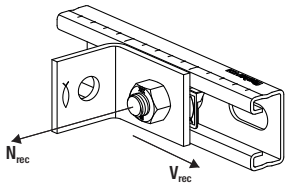


FCN Clix P

## Loads

| Item | Item no. | Max. recommended tension load for FUS 2,0 mm $N_{rec}$ [kN] | Max. recommended tension load for FUS 2,5 mm $N_{rec}$ [kN] | Max. recommended shear load for FUS 2,0 mm $V_{rec}$ [kN] | Max. recommended shear load for FUS 2,5 mm $V_{rec}$ [kN] | Tightening torque for screw grade ≥ 8.8 $T_{inst}$ [Nm] | Sales unit [pcs] |
|---|---|---|---|---|---|---|---|
| FCN Clix P 8 hdg. | 559765 | 4.0 | 4.0 | 1.0 | 1.0 | 20 | 50 |
| FCN Clix P 10 hdg | 559766 | 5.0 | 8.0 | 1.5 | 1.5 | 40 | 50 |
| FCN Clix P 12 hdg | 559767 | 5.0 | 8.0 | 2.0 | 2.0 | 50 | 50 |

# Channel nut FCN Clix M hdg

Channel nut for quick and easy fixing in FUS profiles



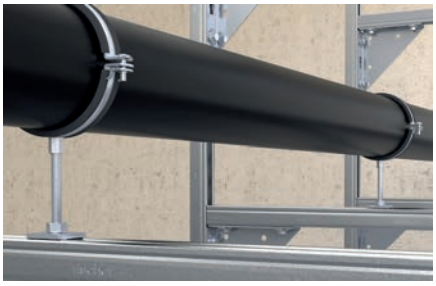

Connection on channel



## Applications

- Connection of pipe clamps to FUS channel under the use of threaded rods.
- For indoor and outdoor application.

## Certificates

R 120

R 30 MLAR

## Advantages

- The sliding nut design enables a quick and easy setting in the channel.
- The serration on the sliding nut provides a secure hold in the FUS channel.
- Installation by rotating 90° enables post-installation in installed channel.

## Properties

- Material: steel S235JR (material no. 1.0037) acc. to DIN EN 10025
- Material plastic: Nylon PA6
- Zinc plating: hot-dip galvanised

## Installation FCN Clix M

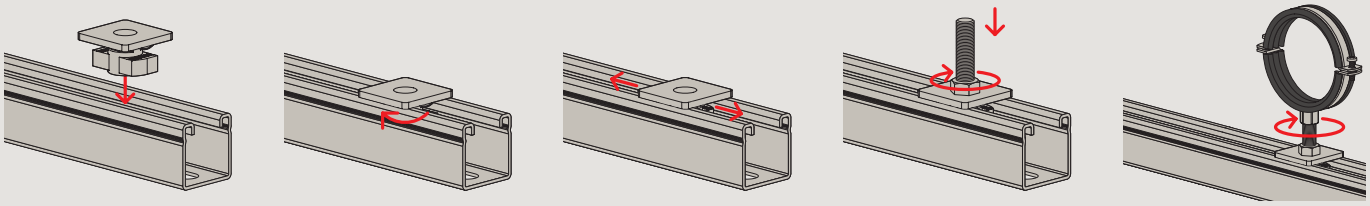

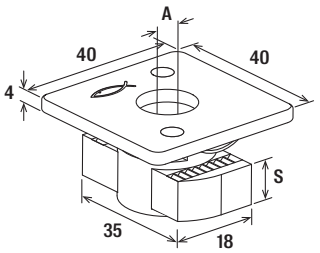


FCN Clix M

## Technical data

| Item | Item no. | Fire test report | Thread A | Thickness S [mm] | Sales unit [pcs] |
|---|---|---|---|---|---|
| FCN Clix M 8 hdg | 559768 | No | M8 | 6.0 | 50 |
| FCN Clix M 10 hdg | 559769 | Yes | M10 | 8.0 | 50 |
| FCN Clix M 12 hdg | 559770 | Yes | M12 | 9.5 | 50 |



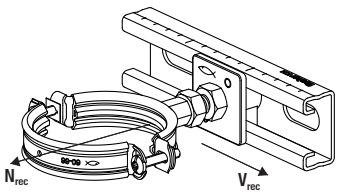


FCN Clix M

## Loads

| Item | Item no. | Max. recommended tension load for FUS 2,0 mm $N_{rec}$ [kN] | Max. recommended tension load for FUS 2,5 mm $N_{rec}$ [kN] | Tightening torque for screw grade ≥ 4.6 $T_{inst}$ [Nm] | Sales unit [pcs] |
|---|---|---|---|---|---|
| FCN Clix M 8 hdg | 559768 | 4.0 | 4.0 | 10 | 50 |
| FCN Clix M 10 hdg | 559769 | 5.0 | 8.0 | 15 | 50 |
| FCN Clix M 12 hdg | 559770 | 5.0 | 8.0 | 20 | 50 |

# Channel nut FCN 16 hdg

Connector - Channel nut FCN 16 hdg





Lightweight installation on cantilever

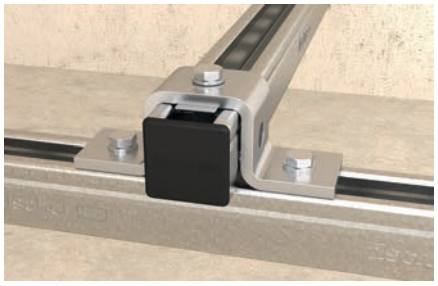

Cross connection



## Applications

- Simple hammer-head nut for installation in FUS channels
- The FCN is suitable for the connection of different fixtures and pipe clamps with the channel
- For indoor and outdoor application.

## Advantages

- The serration on the sliding nut provides a secure hold in the FUS channel.

## Properties

- Material: steel with min. tensile strength of 415 N/mm²
- Zinc plating: hot-dip galvanised

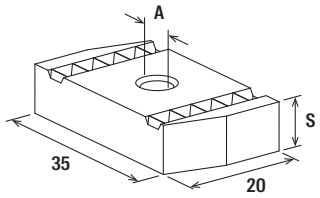


FCN

## Technical data

| | Item no. | Thread<br>A | Thickness<br>S<br>[mm] | Sales unit<br>[pcs] |
|---|---|---|---|---|
| Item | | | | |
| **FCN 16 hdg** | **561774** | M16 | 12.0 | 100 |

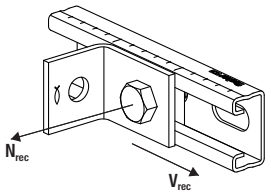


FCN

## Loads

| | Item no. | Max. recommended tension load for FUS 1,5 mm $N_{rec}$ [kN] | Max. recommended tension load for FUS 2,0 mm $N_{rec}$ [kN] | Max. recommended tension load for FUS 2,5 mm $N_{rec}$ [kN] | Max. recommended shear load for FUS 1,5 mm $V_{rec}$ [kN] | Max. recommended shear load for FUS 2,0/2,5 mm $V_{rec}$ [kN] | Tightening torque for screw grade ≥ 8.8 $T_{inst}$ [Nm] | Sales unit [pcs] |
|---|---|---|---|---|---|---|---|---|
| **Item** | | | | | | | | |
| **FCN 16 hdg** | **561774** | 4.0 | 5.0 | 8.0 | 2.0 | 3.0 | 50 | 100 |

# Channel washer HK 41 hdg

Connector - Channel washer HK 41 hdg





Lateral pipe mounting at channel



Channel installation at ceiling



## Applications

- The channel washer HK is used for stable connections and to strengthen the FUS profile for a fixing to the substrate.
- For indoor and outdoor application.

## Advantages

- Perfect connection with the FUS channel thanks to laterally curved contours.
- The shape of the channel washer makes the push-through installations of channel profiles quick and easy.
- Fire resistance classification R120 & German model pipeline system guideline MLAR R30.

## Properties

- Material: steel S235JR (material no. 1.0037) acc. to DIN EN 10025
- Zinc plating: hot-dip galvanised

## Certificates

R 120

R 30 MLAR

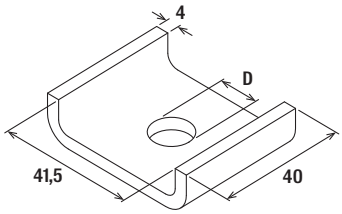


HK 41

## Technical data

| Item | Item no. | Fire test report | Hole-Ø D [mm] | Sales unit [pcs] |
|---|---|---|---|---|
| HK 41 10.5 hdg | 547495 | Yes | 10.5 | 50 |
| HK 41 12.5 hdg | 547496 | Yes | 12.5 | 50 |
| HK 41 17 hdg | 561254 | No | 17 | 50 |

# Saddle flange SF hdg

Construction element - Saddle flange SF hdg





Pipe installation in escape route



Cantilever with saddle flange



## Applications

- For solid connections between the channel and building structures
- For indoor and outdoor application.

## Certificates

R 120

R 30 MLAR

## Advantages

- The perfect-fit saddle of the SF allows simple installation by inserting the mounting channel.
- The saddle flange‘s stable design offers a secure hold for load-bearing construction.
- Fire protection test R120.
- Sample cable system directive test MLAR R30.

## Properties

- Material base plate: steel DC01 (material no. 1.0330) acc. to DIN EN 10139
- Zinc plating base plate: hot-dip galvanised
- Material U-Profile: steel S235JR (material no. 1.0037) acc. to DIN EN 10025
- Zinc-plating U-Profile: hot-dip galvanised

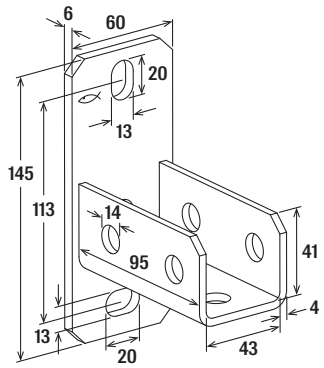


SF L 41

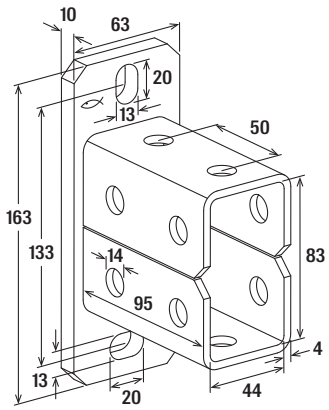


SF L 82

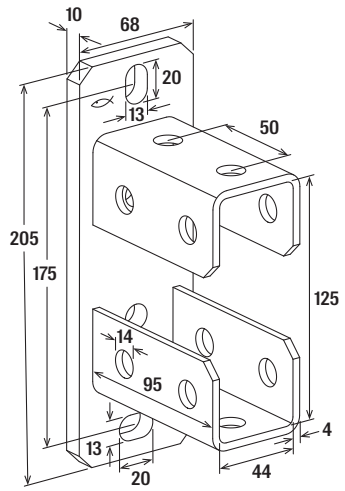


SF L 124

## Technical data

| Item | Item no. | Fire test report | For profile | Sales unit [pcs] |
|---|---|---|---|---|
| **SF L 41 hdg** | **517421** | Yes | 21, 41, 21D, 62 | 10 |
| **SF L 82 hdg** | **538125** | – | 41 | 5 |
| **SF L 124 hdg** | **538126** | – | 62 | 5 |

See channel nut FCN Clix P hdg. for loads

# Mounting bracket UWS hdg

Construction element - Universal bracket UWS hdg





3D-frame constructions



## Applications

- Universal angle bracket for the reinforcement of supporting structures
- For indoor and outdoor application.

## Advantages

- The universal bracket for connecting fischer mounting channels gives a supporting structure great stability and safety (we recommend using in pairs).

## Properties

- Material: steel S235JR (material no. 1.0037) acc. to DIN EN 10025
- Zinc plating: hot-dip galvanised

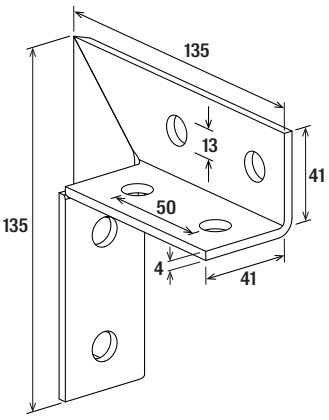


UWS

## Technical data

| | Item no. | | Sales unit [pcs] |
|---|---|---|---|
| **Item** | | | |
| **UWS hdg** | **538115** | | 10 |

See channel nut FCN Clix P hdg. for loads

# Angle bracket WK hdg

Construction ellement - Angle bracket WK hdg

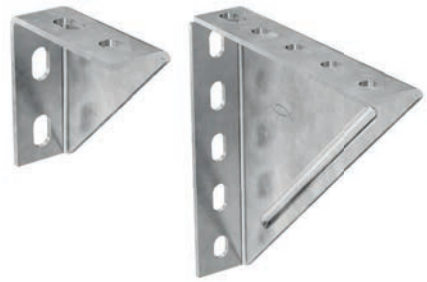

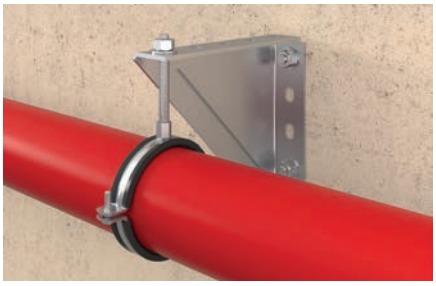

Heavy drainage pipe under angle bracket



Solid frame construction



## Applications

- Stable angle bracket for stiffening FUS channel constructions and for fixing pipelines.
- For indoor and outdoor application.

## Advantages

- The design of the angle bracket allows the fixing of pipe clamps or mounting channels.
- The stable angle ensures a very high level of stability and safety to the structure.

## Properties

- Material:steel S235JR (material no. 1.0037) acc. to DIN EN 10025
- Zinc plating: hot-dip galvanised

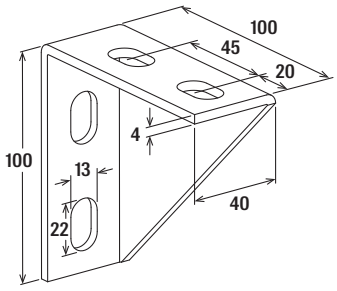


WK 100/100

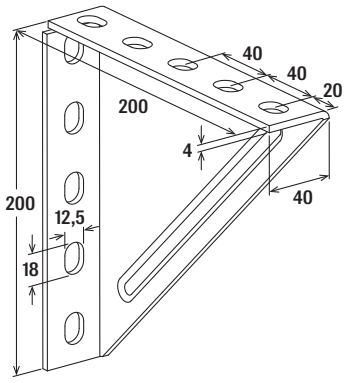


WK 200/200

## Technical data

| Item | Item no. | Max. recommended static load load case 1 $F_{rec}$ [kN] | Max. recommended static load load case 2 $F_{rec}$ [kN] | Sales unit [pcs] |
|---|---|---|---|---|
| WK 100/100 hdg | 538117 | – | 4.00 | 5 |
| WK 200/200 hdg | 538118 | 4.00 | 1.80 | 5 |

## Load case 1

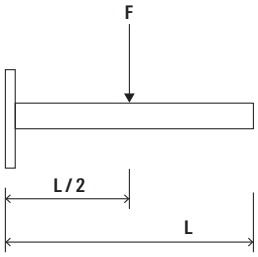


## Load case 2

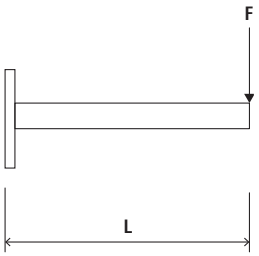


## Loads

| Item | Item no. | | Sales unit [pcs] |
|---|---|---|---|
| WK 100/100 hdg | 538117 | | 5 |
| WK 200/200 hdg | 538118 | | 5 |

# Bracket FFF hdg

Construction elements - Brackets FFF hdg

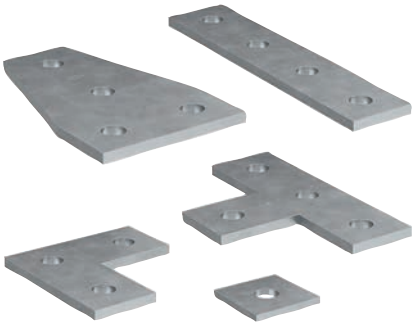

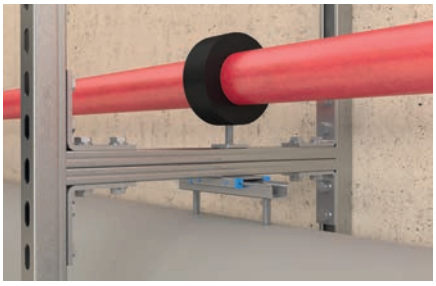

Frame constructions

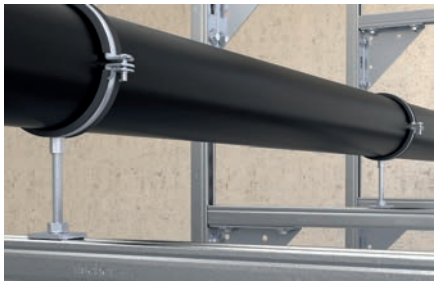

Connection on channel



## Applications

- Connecting elements for the joining or strengthening of simple channel constructions.
- For indoor and outdoor application.

## Advantages

- The various shapes of the connectors offer flexibility when it comes to the installation of channel constructions.
- The holes in the connectors guarantee a system fit with the FCN Clix P.

## Properties

- Material: steel S235JR (material no. 1.0037) acc. to DIN EN 10025, FFF 5C uses Q235B (equivalent to S235JR)
- Zinc plating: hot-dip galvanised

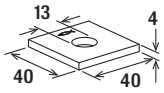


FFF 1

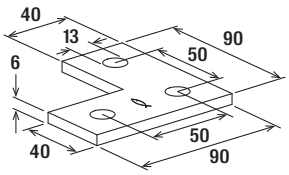


FFF 3L

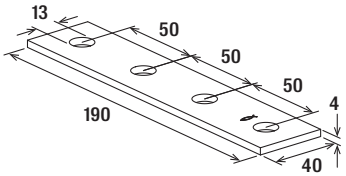


FFF 4

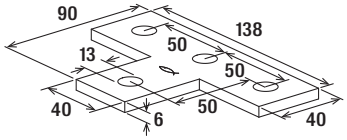


FFF 4T

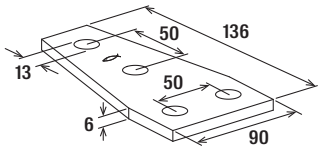


FFF 4D

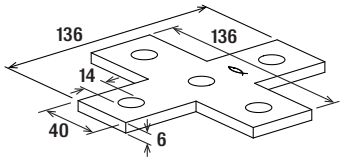


FFF 5C

## Technical data

| Item | Item no. | | Sales unit [pcs] |
|---|---|---|---|
| FFF 1 hdg | 547506 | | 25 |
| FFF 3L hdg | 537581 | | 25 |
| FFF 4 hdg | 547507 | | 25 |
| FFF 4T hdg | 537583 | | 25 |
| FFF 4D hdg | 537584 | | 25 |

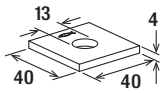


FFF 1

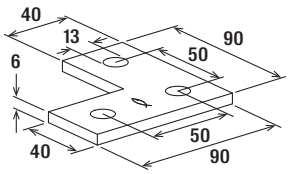


FFF 3L

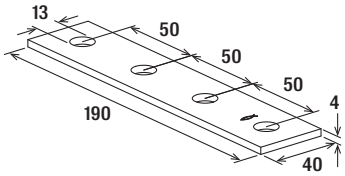


FFF 4

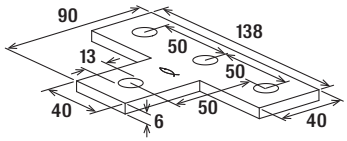


FFF 4T

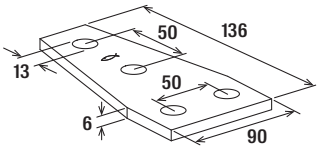


FFF 4D

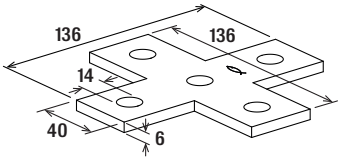


FFF 5C

## Technical data

| | Item no. | | Sales unit [pcs] |
|---|---|---|---|
| **Item** | | | |
| **FFF 5C hdg** | **553075** | | 20 |

See channel nut FCN Clix P hdg. for loads

# Bracket FAF hdg

Construction elements - Mounting bracket FAF hdg



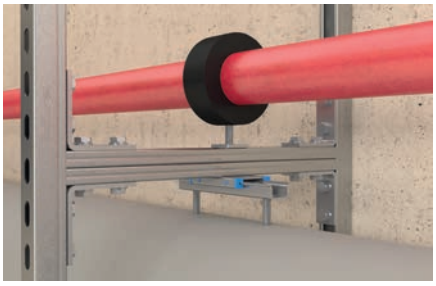

Frame constructions



## Applications

- Connecting elements for the joining or strengthening of simple channel constructions.
- For indoor and outdoor application.

## Advantages

- The various shapes of the connectors offer flexibility when it comes to the installation of channel constructions.
- The holes in the connectors guarantee a system fit with the FCN Clix P.

## Properties

- Material: steel S235JR (material no. 1.0037) acc. to DIN EN 10025
- Zinc plating: hot-dip galvanised

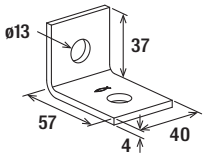


FAF 2

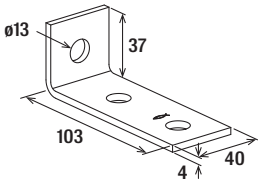


FAF 3

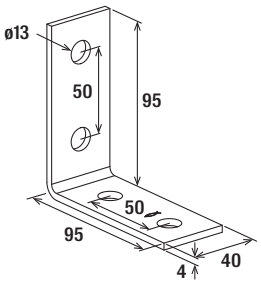


FAF 4

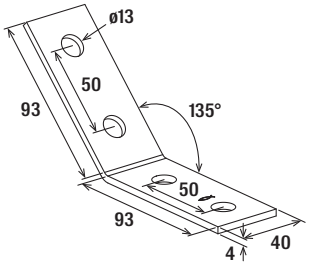


FAF 4/135°

10

## Technical data

| Item | Item no. | | Sales unit [pcs] |
|---|---|---|---|
| **FAF 2 hdg** | **547508** | | 25 |
| **FAF 3 hdg** | **547509** | | 25 |
| **FAF 4 hdg** | **547510** | | 25 |
| **FAF 4/135° hdg** | **547511** | | 25 |

See channel nut FCN Clix P hdg. for loads

# Bracket FUF 21 / 41 / 62 hdg

Construction elements - Mounting brackets FUF hdg

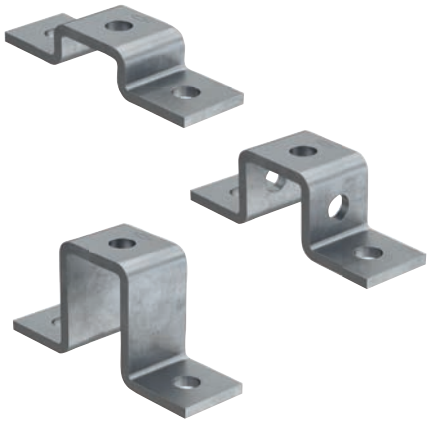

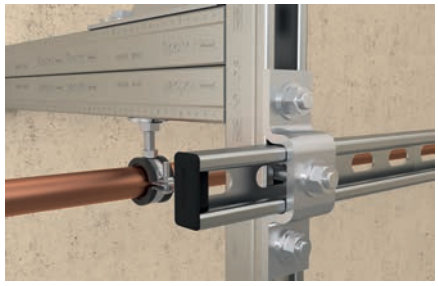

Cross connection on channel



## Applications

- Connecting elements for multi-dimensional channel constructions.
- For indoor and outdoor application.

## Advantages

- The various shapes of the connecting elements offer flexibility when it comes to the installation of channel constructions.
- The holes in the connecting elements make them compatible with the FCN Clix P.

## Properties

- Material: steel S235JR (material no. 1.0037) acc. to DIN EN 10025, FUF 62 uses Q235B (equivalent to S235JR)
- Zinc plating: hot-dip galvanised

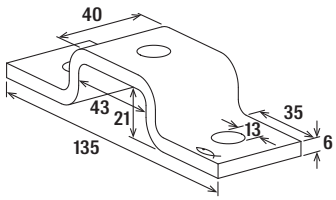


FUF 21

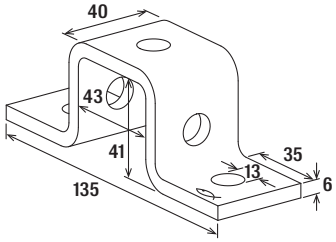


FUF 41

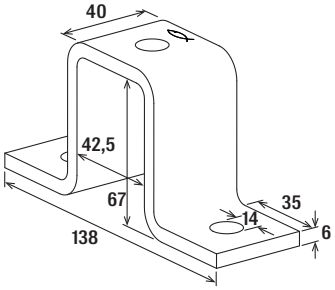


FUF 62

## Technical data

| Item | Item no. | | Sales unit [pcs] |
|---|---|---|---|
| FUF 21 hdg | 537588 | | 25 |
| FUF 41 hdg. | 537589 | | 25 |
| FUF 62 hdg | 553083 | | 15 |

See channel nut FCN Clix P hdg. for loads

# Bracket FUF 180° hdg

Construction elements - mounting brackets FUF hdg





3D-frame constructions



## Applications

- Connecting elements for multi-dimensional channel constructions.
- For indoor and outdoor application.

## Advantages

- The various shapes of the connecting elements offer flexibility when it comes to the installation of channel constructions.
- The holes in the connecting elements make them compatible with the FCN Clix P.

## Properties

- Material: steel S235JR (material no. 1.0037) acc. to DIN EN 10025
- Zinc plating: hot-dip galvanised

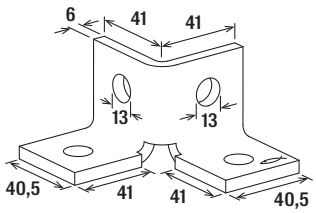


FUF 4Y

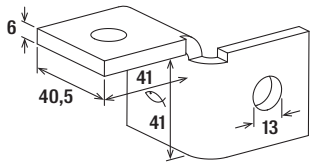


FUF 180°L

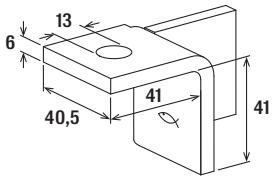


FUF 180°R

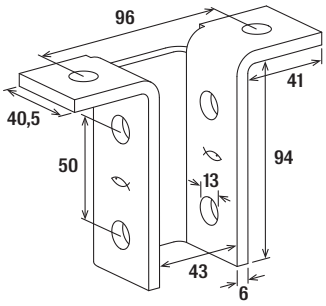


FUF 8T

## Technical data

| Item | Item no. | | Sales unit [pcs] |
|---|---|---|---|
| **FUF 4Y hdg** | **537585** | | 20 |
| **FUF 180°L hdg** | **537586** | | 20 |
| **FUF 180°R hdg** | **537587** | | 20 |
| **FUF 8T hdg** | **537590** | | 10 |

See channel nut FCN Clix P hdg. for loads

# Variable bracket VB hdg

Construction element – Variable bracket VB hdg





Massive bracing of cantilever arm



## Applications

- Variable bracket to build up and strengthen supporting structures of FUS channel constructions with an angle from 0° to 180°.
- For indoor and outdoor application.

## Advantages

- The design of the variable bracket VB enables the fixation of mounting channels at an angle of 0° to 180°.
- Due to the perforations on all sides of the VB, channels can be mounted with the channel opening facing downwards or laterally.
- The punched holes in the base plate allow the direct fixing onto a wall, ceiling or onto a mounting channel.

## Properties

- Material: steel S235JR (material no. 1.0037) acc. to DIN EN 10025
- Zinc plating: hot-dip galvanised

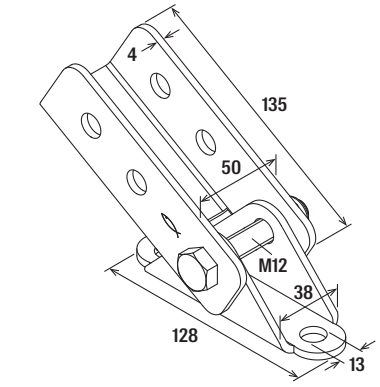


VB

## Technical data

| Item | Item no. | | Sales unit [pcs] |
|---|---|---|---|
| VB hdg | 545771 | | 5 |

See channel nut FCN Clix P hdg. for loads

# Universal hinge FUH hdg

Construction elements - Universal hinge FUH hdg





Inclined bracing for installation grid



## Applications

- Variable construction element for bracing with threaded rods or to fix pipelines to sloped substructures.
- Can be attached directly to the underground or to FUS channels.
- Flexible use especially for sloped substructures or undergrounds.
- For indoor and outdoor application.

## Advantages

- Flexible solution for many applications such as fixing of pipelines to sloped undergrounds or bracing with threaded rods.
- Free adjustable angle from 0° up to 180°.
- Easy to use.

## Properties

- Material: steel S235JR (material no. 1.0037)
- Zinc plating: hot dip-galvanised acc. to DIN EN ISO 1461

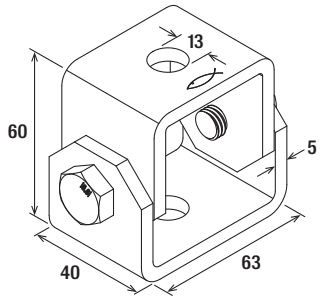


FUH

## Technical data

| Item | Item no. | | Sales unit [pcs] |
|---|---|---|---|
| FUH 13 hdg | 573141 | | 6 |

## Loads

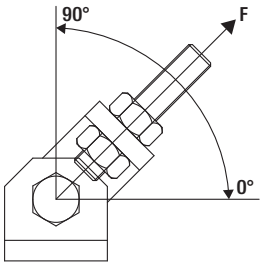


| Angle | 90° | 75° | 60° | 45° | 30° | 0° |
|---|---|---|---|---|---|---|
| Maximum recommendet load [kN] | 6 | 5,5 | 5 | 4 | 3 | 2,5 |

Intermediate values can be interpolated.

# Threaded rod bracket FSB 45° hdg

Construction element - Threaded rod bracket FSB 45° hdg

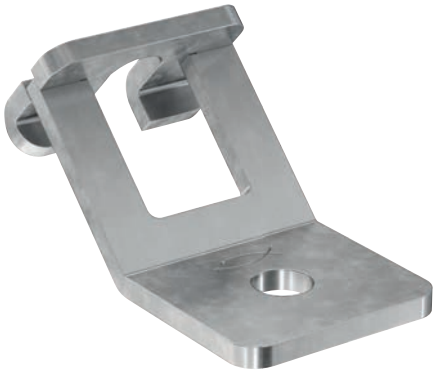



Heavy pipe on cantilever



Bracing for fixed point



## Applications

- For easy creation of bracing and stiffening using threaded rods and nuts.
- For indoor and outdoor application.

## Advantages

- The anchoring element's socket allows the fast insertion of a pre-mounted M10 threaded rod with nut.
- The hole in the base plate allows the direct fixing onto a wall or ceiling, or onto a mounting channel.

## Properties

- Material: steel S235JR (material no. 1.0037) acc. to DIN EN 10025
- Zinc plating: hot-dip galvanised

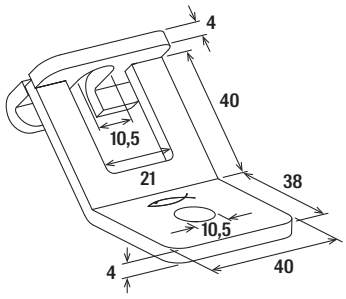


FSB 45°

## Technical data

| | Item no. | | Sales unit [pcs] |
|---|---|---|---|
| Item | | | |
| FSB 45° hdg | 538120 | | 20 |

## Loads

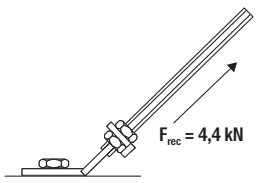

# Beam clamp TKR hdg

Beam clamp TKR hdg - Clamp for fixing of profiles to steel girders





Channel to steelbeam



## Applications

- Fixing to steel girders.
- For indoor and outdoor application.

## Advantages

- The design of the beam clamp allows fixing without drilling or welding.
- The various lengths of the beam clamp allow the fixing on most standard beams.
- The shape of the beam clamp allows a simple adjustment of the channel connection.

## Properties

- Material plate / U-bolt pipe hanger: steel S235JR (material no. 1.0037) acc. to DIN EN 10025
- Material hexagon nut: steel resistance class 8
- Zinc plating: hot-dip galvanised

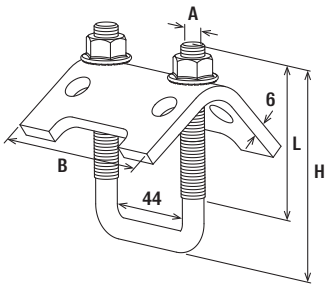


TKR

## Technical data

| Item | Item no. | For profile | Thread A | Width B [mm] | Height H [mm] | Length L [mm] | Sales unit [pcs] |
|---|---|---|---|---|---|---|---|
| TKR 21- 42 hdg | 538122 | 21, 41 | M10 | 79 | 97 | 48 | 20 |
| TKR 82 hdg | 538123 | 62, 41D | M10 | 79 | 137 | 80 | 20 |
| TKR 124 hdg | 538124 | 62 | M10 | 79 | 179 | 80 | 10 |

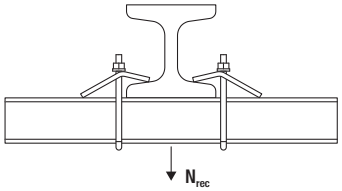


TKR

## Loads

| Item | Item no. | Max. recom. static load (centr. tension) $N_{rec}$ [kN] | Tightening torque $T_{inst}$ [Nm] | Max. clamping range girders [mm] | Sales unit [pcs] |
|---|---|---|---|---|---|
| **TKR 21- 42 hdg** | **538122** | 10.00 | 20 | 25 | 20 |
| **TKR 82 hdg** | **538123** | 10.00 | 20 | 25 | 20 |
| **TKR 124 hdg** | **538124** | 10.00 | 20 | 25 | 10 |

# Beam clamp TKL hdg

Clamp hanger TKL hdg - the easy fixing solution without welding and drilling





Heavy drainage pipe on beam clamp



## Applications

- Clamp hangers allow for simple fixing by clamping direct to steel girders.
- Retaining straps SS-TKL are required for VdS equipment over Ø 65 mm.
- hdg: for indoor and outdoor application.

## Advantages

- The TKL design with its clamping screw allows for fixing to steel girders without the need for welding and drilling.
- The design of the clamping screw prevents it from slipping from the steel girder.
- VdS/FM/UL certificates guarantee independently tested safety.
- The solid TKL design guarantees a high load-bearing capacity.
- The TKL with thread mount guarantees quick and easy installation.

## Properties

- Material TKL hdg: malleable cast iron GJMB-350-10 (M12: 460-6) acc. to DIN 1562
- Material bolt: steel 8.8 acc. to ISO 4017
- Material nut: steel acc. to ISO 4035, strength category 4
- Zinc plating: hot-dip galvanised
- Material SS-TKL: steel DX51D (material no. 1.0226) acc. to EN 10214
- Zinc plating SS-TKL: electro zinc-plated

## Installation TKL

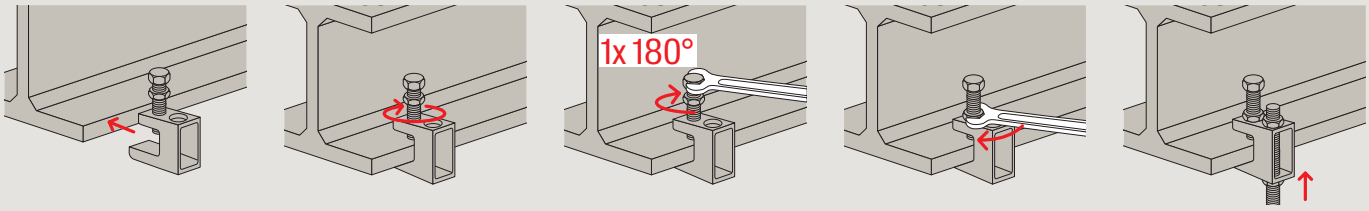

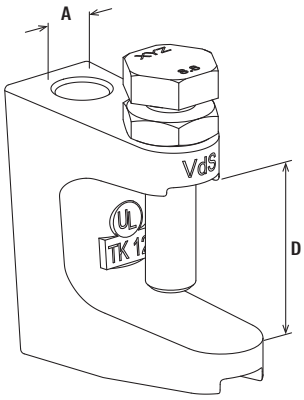


TKL

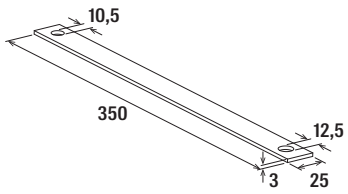


SS-TKL

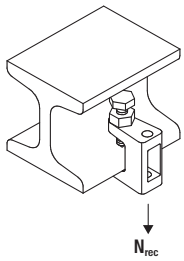


## Technical data

| Item | Item no. | Clamping range D [mm] | Thread A | Max. recom. static load (centr. tension) $N_{rec}$ [kN] | Sales unit [pcs] |
|---|---|---|---|---|---|
| **TKL L M8 hdg** | **564392** | 0 - 18 | M8 | 1.20 | 50 |
| **TKL M10 hdg** | **564393** | 0 - 20 | M10 | 2.50 | 50 |
| **TKL M12 hdg** | **564394** | 0 - 26 | M12 | 3.50 | 50 |
| **SS-TKL M10/M12** | **048154** | – | Ø 10 / Ø 12 | – | 25 |

· The galvanised retaining strap SS-TKL (item no. 48154) can be used for the hot-dip galvanised beam clamps.

# Beam clamp FHBC hdg

Beam clamp FHBC - Beam clamp for the installation of FUS channels on steel girders





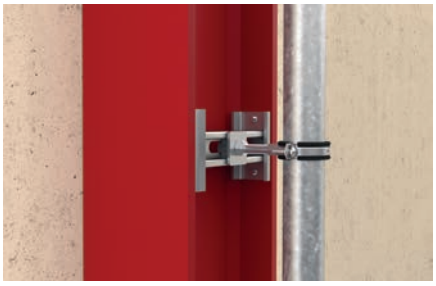

Pipe installation on steel girders



## Applications

- For installing FUS profile channels between the flanges on steel girders and U-profiles.
- Suitable for FUS channels FUS 41.
- For indoor and outdoor application.

## Advantages

- Easy installation of FUS profile to the flanges of steel girders.
- The FHBC allows for the installation of FUS channels on steel girders without drilling.

## Properties

- Material: steel S235JR (material no. 1.0037) acc. to DIN EN 10025 (74074882)
- Zinc plating: hot-dip galvanised

## Installation FHBC

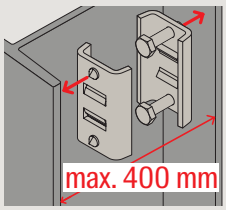


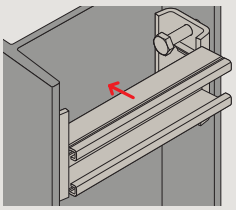

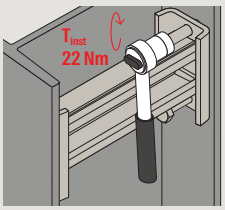


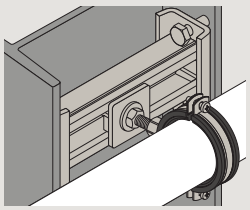

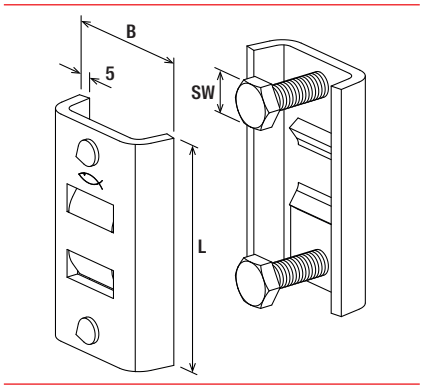


FHBC

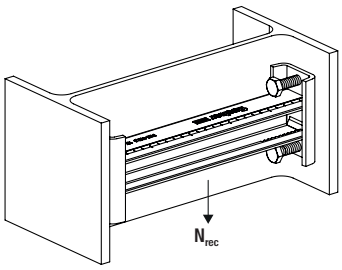


FHBC

## Technical data

| | Item no. | Width B [mm] | Length L [mm] | Width across nut SW [mm] | Max. recom. static load (centr. tension) $N_{rec}$ [kN] | Installation torque $T_{inst}$ [Nm] | Sales unit [pcs] |
|---|---|---|---|---|---|---|---|
| **Item** | | | | | | | |
| **FHBC hdg** | **557375** | 55 | 90 | 17 | 3.60 | 22 | 10 |

# Threaded rod G hdg

Universal threaded rod for fixing pipes and channels





## Applications

- For indoor and outdoor application.

## Properties

- Material DIN 976 steel 4.8 acc. to DIN EN ISO 898-1
- Coating M8: zinclamella
- Coating M10-M16: hot-dip galvanised

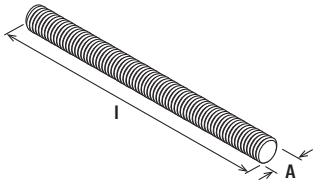


G

## Technical data

| Item | Item no. | Thread<br>A | Length<br>l<br>[mm] | Sales unit<br>[pcs] |
|---|---|---|---|---|
| G M8 x 1000 zl | 537691 | M8 | 1,000 | 25 |
| G M10 x 1000 hdg | 537694 | M10 | 1,000 | 25 |
| G M12 x 1000 hdg | 537695 | M12 | 1,000 | 20 |
| G M16 x 1000 hdg | 537696 | M16 | 1,000 | 10 |

# Hexagonal screw SKS hdg





## Applications

- For indoor and outdoor application.

## Properties

- Material: steel acc. to DIN EN ISO 4017, steel 8.8
- Zinc plating: hot-dip galvanised

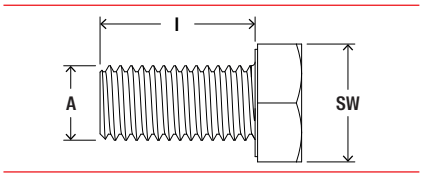


SKS

## Technical data

| Item | Item no. | Thread A | Length l [mm] | Width across nut SW [mm] | Sales unit [pcs] |
|---|---|---|---|---|---|
| SKS M10 x 16 hdg | 571694 | M10 | 16 | 17 | 200 |
| SKS M10 x 25 hdg | 537681 | M10 | 25 | 17 | 100 |
| SKS M12 x 20 hdg | 570683 | M12 | 20 | 19 | 100 |
| SKS M12 x 25 hdg | 537680 | M12 | 25 | 19 | 100 |
| SKS M12 x 30 hdg | 570684 | M12 | 30 | 19 | 100 |
| SKS M12 x 70 hdg | 570685 | M12 | 70 | 19 | 50 |

# Washer U

Washer for fischer installation system



10

## Applications

- For indoor and outdoor application.

## Properties

- Material: steel acc. to DIN 10139
- Zinc plating: hot-dip galvanised

## Technical data

| Item | Item no. | Thickness S [mm] | External-ø d [mm] | Hole-Ø D [mm] | Sales unit [pcs] |
|---|---|---|---|---|---|
| U 8 x 28 hdg | 537682 | 2.0 | 28 | 8.4 | 100 |
| U 10 x 21 hdg | 537683 | 2.0 | 21 | 10.5 | 100 |
| U 10 x 40 hdg | 537684 | 3.0 | 40 | 10.5 | 100 |
| U 12 x 24 hdg | 537685 | 2.5 | 24 | 13 | 100 |
| U 12 x 40 hdg | 537686 | 3.0 | 40 | 13 | 100 |

# Hexagonal nut MU hdg

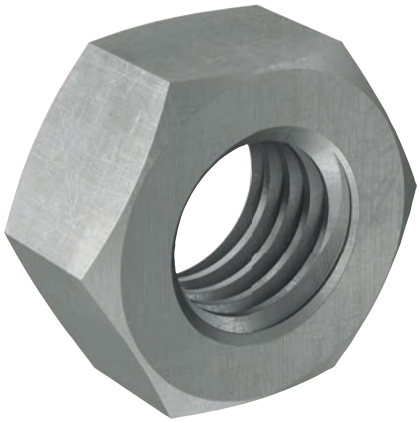



## Applications

- For indoor and outdoor application.

## Properties

- Material: steel acc. to DIN 934, resistance class 8
- Zinc plating: hot-dip galvanised

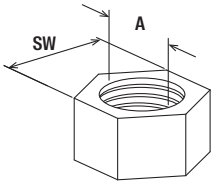


MU

## Technical data

| Item | Item no. | Thread<br>A | Width across nut<br>SW<br>[mm] | Sales unit<br>[pcs] |
|---|---|---|---|---|
| **MU M8** | **537687** | M8 | 13 | 100 |
| **MU M10** | **537688** | M10 | 17 | 100 |
| **MU M12** | **537689** | M12 | 19 | 100 |
| **MU M16** | **537690** | M16 | 24 | 50 |

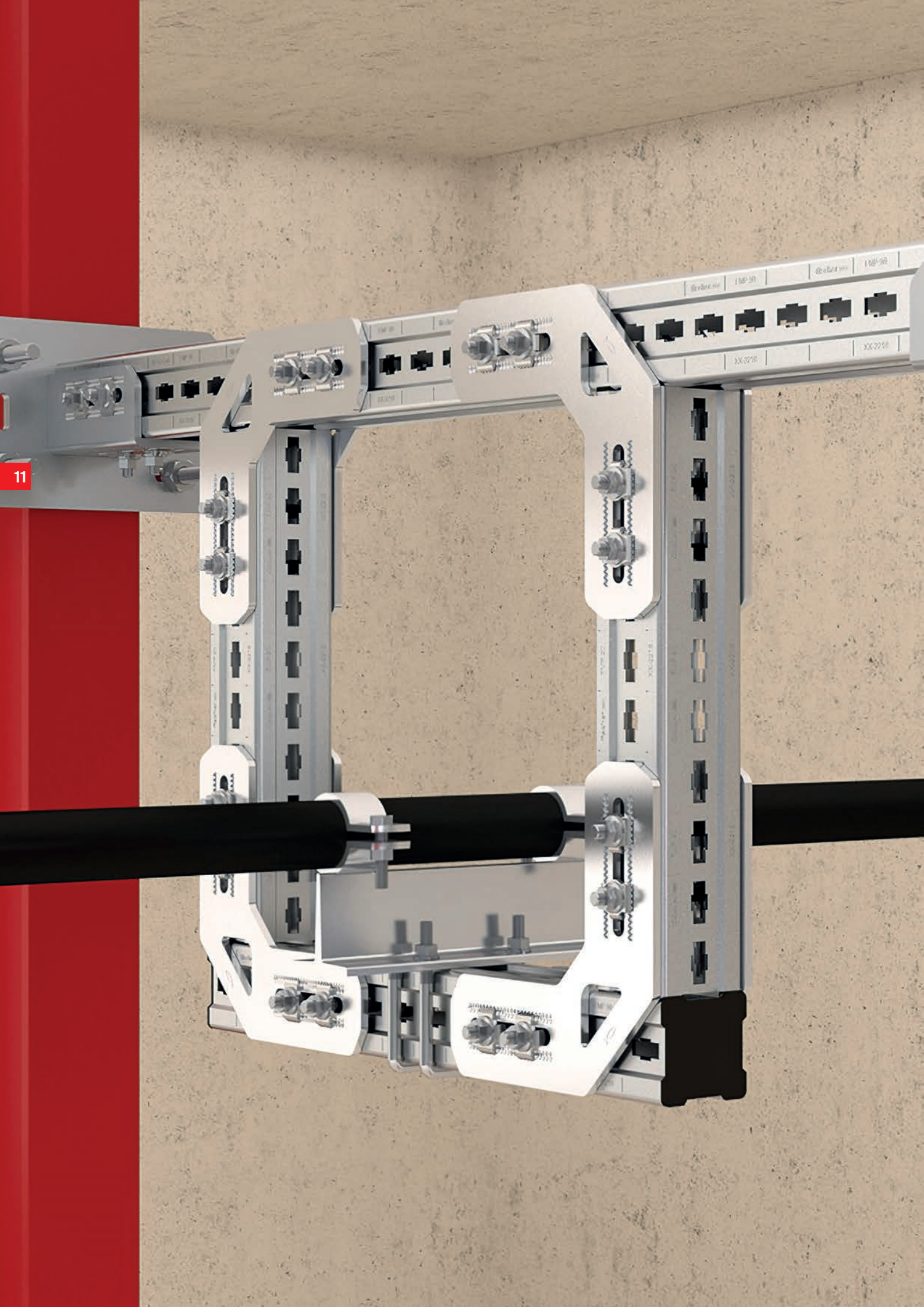

# 11

# Massive channel system FMS


| | | |
|---|---|---|
| Massive profile FMP | 374 |  |
| Channel connector FMPC | 379 |  |
| Cantilever FMC | 381 |  |
| End cap FMEC | 384 |  |
| Hammer-head push connector FMHB | 385 |  |
| Internal thread connector FMHI | 387 |  |
| Transportation connector FMTC 90 | 389 |  |
| Connecting element FMCE | 391 |  |
| Connecting element FMCE-L | 393 |  |
| Saddle flange FMSF | 395 |  |
| Base plate FMSF BP | 398 | 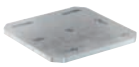 |
| Angle bracket FMASF 90 | 399 |  |
| Variable bracket FMVB | 401 |  |
| Beam clamp FMBC | 403 |  |
| Beam clamp FMBC M12 and M16 | 405 |  |
| Flat fitting FMFF 90° | 407 |  |
| Mounting angle FMA 3 and FMA 4 | 409 |  |
| Mounting angle FMA | 411 |  |

| | | |
|---|---|---|
| System connector FMA-FUS | 413 |  |
| Connecting element FMUF | 415 |  |
| Fixed point U-bolt FMFS UB | 417 |  |
| Pipe shoe sliding element FMFS | 419 |  |
| Fixed point FMFS S and M | 421 |  |
| Pipe shoes FMPS | 423 |  |
| Massive pipe clamp FMFSC | 427 |  |
| Massive U-bolt FMPSU | 429 |  |

# Massive profile FMP

The efficient fixing solution for heavy-duty installations

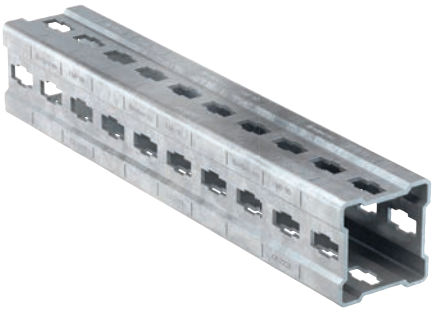



Frame construction



## Applications

- Secure fastening of heavy duty pipelines.
- Safe construction of solid supporting structures.
- For indoor and outdoor application.

## Advantages

- The clearly arranged product range of profiles and construction elements enables on-site assembly without prefabrication and thus considerably reduces costs and time.
- The fischer massive profiles can be processed exclusively by cutting at right angles, thus reducing waste and material costs.
- The construction with the fischer massive channel system FMS also generates a fixing basis for dynamic loads and makes the system universally applicable.
- The hot-dip galvanised product range guarantees on-site processing without subsequent coating speeding the assembly process sustainably.
- The thick coating of the hot-dip galvanised version is suitable for outdoor installations and in corrosive environments.
- The stamped scaling simplifies the cutting to length of the massive profile FMP and ensures the correct installation of the construction elements.

## Properties

- Material FMP 90 and 120: steel S235JR (material no. 1.0038) acc. to DIN EN 10025-2
- Material FMP 160: steel S355MC (material no. 1.0976) acc. to DIN EN 10149-2
- Zinc plating: hot-dip galvanised

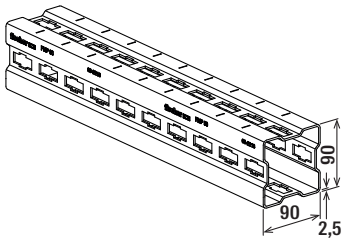


FMP 90/2.5

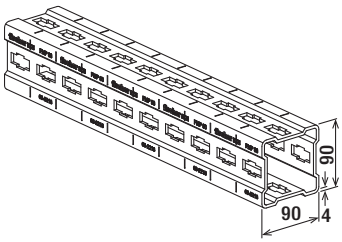


FMP 90

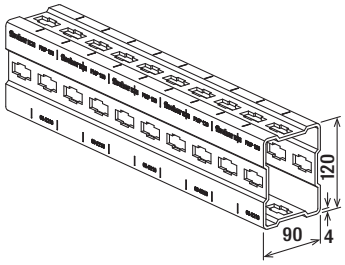


FMP 120

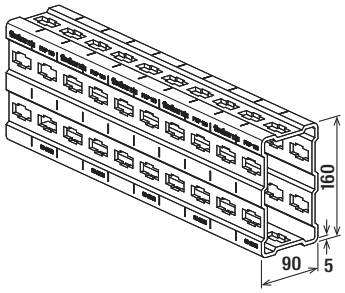


FMP 160

11

## Technical data

| Item | Item no. | Length L [mm] | Width B [mm] | Height H [mm] | Profile weight [kg/m] | Channel cross section [cm²] | Thickness S [mm] | Sales unit [pcs] |
|---|---|---|---|---|---|---|---|---|
| **FMP 90/2,5 - 3 m** | **560562** | 3,000 | 90 | 90 | 6.33 | 7.18 | 2.5 | 1 |
| **FMP 90/2,5 - 6 m** | **560563** | 6,000 | 90 | 90 | 6.33 | 7.18 | 2.5 | 1 |
| **FMP 90 - 3 m** | **547795** | 3,000 | 90 | 90 | 9.68 | 10.97 | 4.0 | 1 |
| **FMP 90 - 6 m** | **547796** | 6,000 | 90 | 90 | 9.68 | 10.97 | 4.0 | 1 |
| **FMP 120 - 3 m** | **547797** | 3,000 | 90 | 120 | 11.85 | 13.37 | 4.0 | 1 |
| **FMP 120 - 6 m** | **547798** | 6,000 | 90 | 120 | 11.85 | 13.37 | 4.0 | 1 |
| **FMP 160 - 6 m** | **547799** | 6,000 | 90 | 160 | 16.86 | 18.91 | 5.0 | 1 |
| **FMP 160 - 8 m** | **547800**[1)] | 8,000 | 90 | 160 | 16.86 | 18.91 | 5.0 | 1 |

[1)] Delivery time on request.

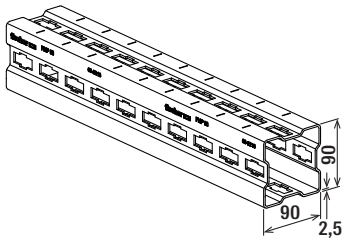


FMP 90/2.5

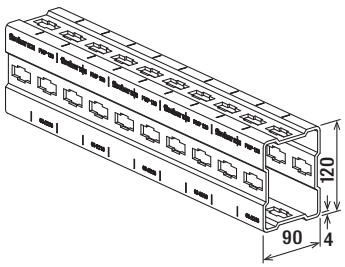


FMP 120

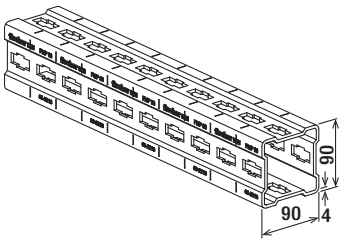


FMP 90

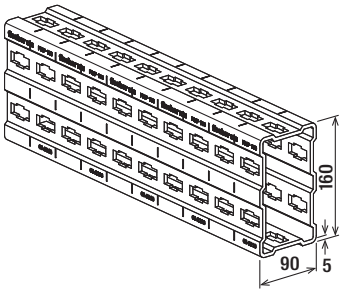


FMP 160

11

## Loads

| Item | Item no. | Yield strength $f_{yk}$ [kN/cm²] | Rec. tensile stress $\sigma_{rec}$* [kN/cm²] | Rec. shear stress $\tau_{rec}$* [kN/cm²] | Moment of inertia $I_y$ [cm⁴] | Moment of inertia $I_z$ [cm⁴] | Section modulus $W_y$ [cm³] | Section modulus $W_z$ [cm³] | Radius of gyration $i_y$ [cm] | Radius of gyration $i_z$ [cm] | Torsional moment of inertia $I_t$ [cm⁴] | Torsional moment of resistance $W_t$ [cm³] | Sales unit [pcs] |
|---|---|---|---|---|---|---|---|---|---|---|---|---|---|
| **FMP 90/2,5 - 3 m** | **560562** | 35.5 | 25.36 | 14.64 | 91.28 | 91.28 | 20.28 | 20.28 | 3.57 | 3.57 | 131.71 | 34.45 | 1 |
| **FMP 90/2,5 - 6 m** | **560563** | 35.5 | 25.36 | 14.64 | 91.28 | 91.28 | 20.28 | 20.28 | 3.57 | 3.57 | 131.71 | 34.45 | 1 |
| **FMP 90 - 3 m** | **547795** | 35.5 | 25.36 | 14.64 | 133.07 | 133.07 | 29.57 | 29.57 | 3.48 | 3.48 | 198.86 | 52.55 | 1 |
| **FMP 90 - 6 m** | **547796** | 35.5 | 25.36 | 14.64 | 133.07 | 133.07 | 29.57 | 29.57 | 3.48 | 3.48 | 198.86 | 52.55 | 1 |
| **FMP 120 - 3 m** | **547797** | 35.5 | 25.36 | 14.64 | 271.97 | 177.46 | 45.33 | 39.44 | 4.51 | 3.64 | 328.80 | 73.19 | 1 |
| **FMP 120 - 6 m** | **547798** | 35.5 | 25.36 | 14.64 | 271.97 | 177.46 | 45.33 | 39.44 | 4.51 | 3.64 | 328.80 | 73.19 | 1 |
| **FMP 160 - 6 m** | **547799** | 35.5 | 25.36 | 14.64 | 645.39 | 247.28 | 80.67 | 54.94 | 5.84 | 3.62 | 583.59 | 119.31 | 1 |
| **FMP 160 - 8 m** | **547800**[1)] | 35.5 | 25.36 | 14.64 | 645.39 | 247.28 | 80.67 | 54.94 | 5.84 | 3.62 | 583.59 | 119.31 | 1 |

[1)] Delivery time on request.

The recommended stress is calculated acc. EN 1993; $\sigma_{rec}=f_{yk}/(\gamma_L * \gamma_{M0})$ with $\gamma_L=1.4$ and $\gamma_{M0}=1.0$.

## Simply supported beam with single load at L/2

F [kN]**

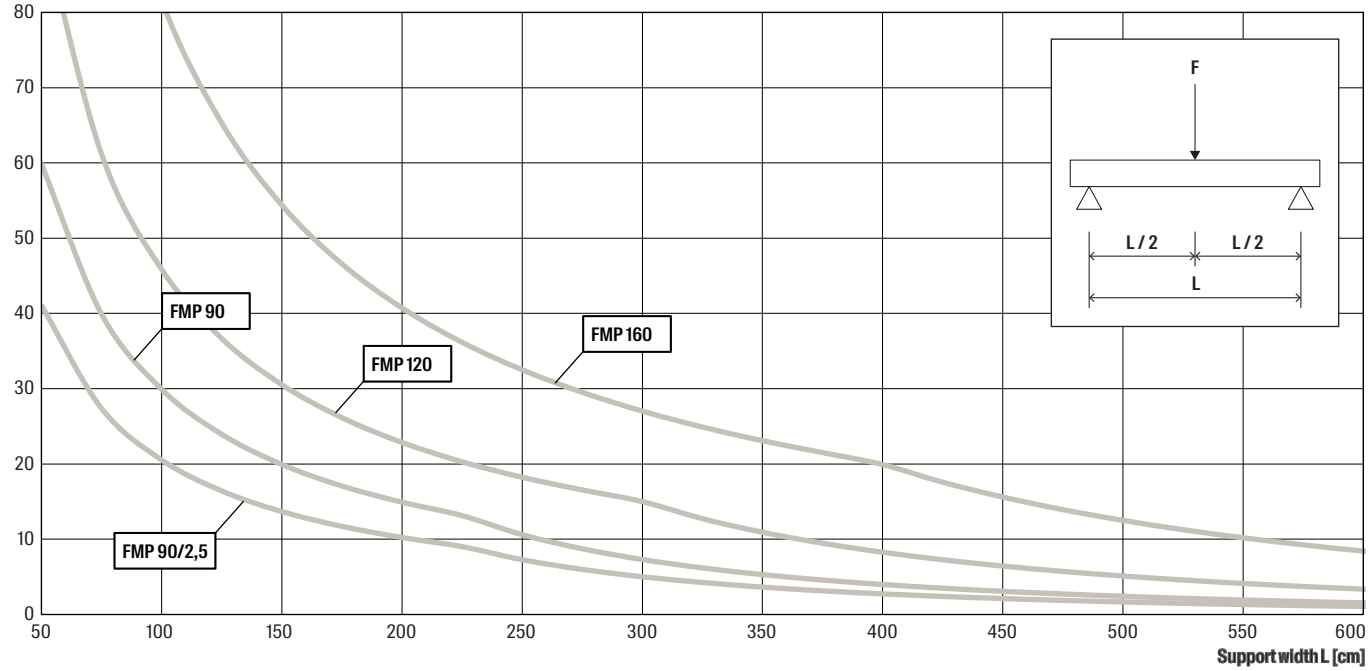


** The permissible stress is calculated acc. EN 1993; $\sigma_{rec}=f_{yk}/(\gamma_L * \gamma_{M0})$ with $\gamma_L=1,4$ and $\gamma_{M0}=1,0$. Lower value of permissible stress (shear, bending or combined) or max. defelection (L/200) is decisive

## Simply supported beam with two single loads at L/3

F [kN]**

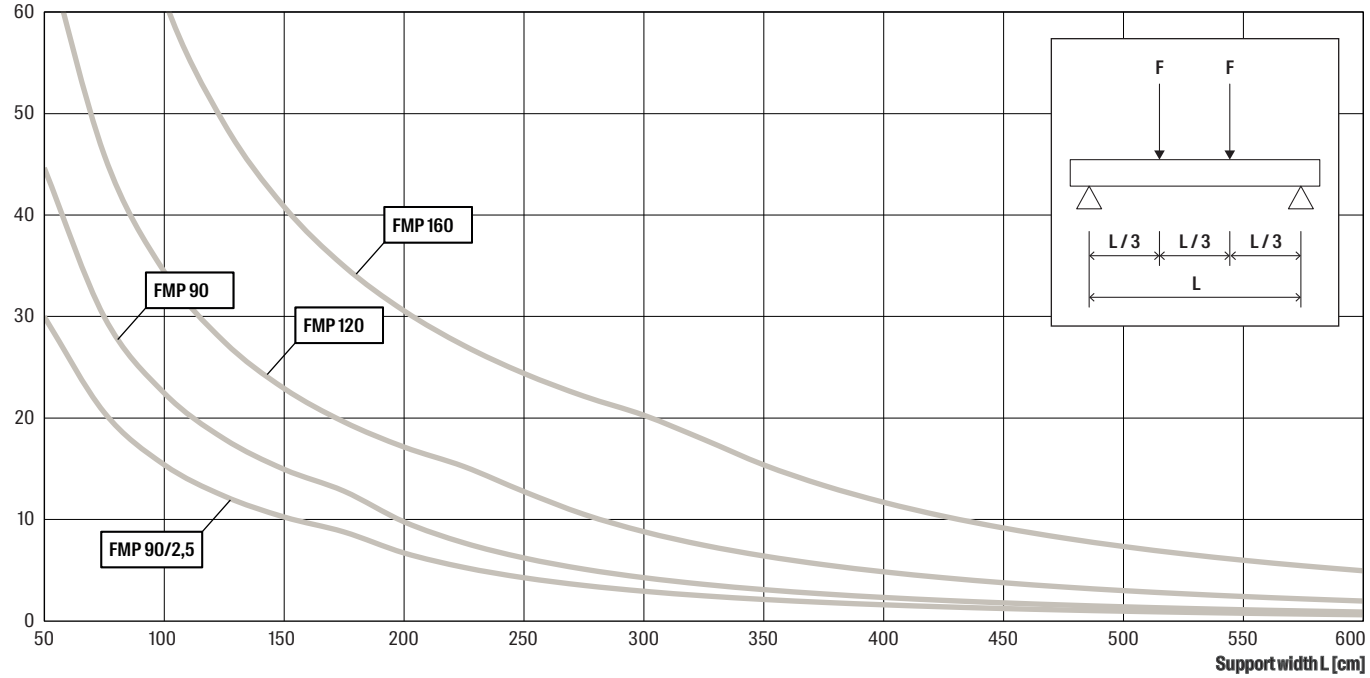


** The permissible stress is calculated acc. EN 1993; $\sigma_{rec}=f_{yk}/(\gamma_L * \gamma_{M0})$ with $\gamma_L=1,4$ and $\gamma_{M0}=1,0$. Lower value of permissible stress (shear, bending or combined) or max. defelection (L/200) is decisive

## Simply supported beam with three single loads at L/4

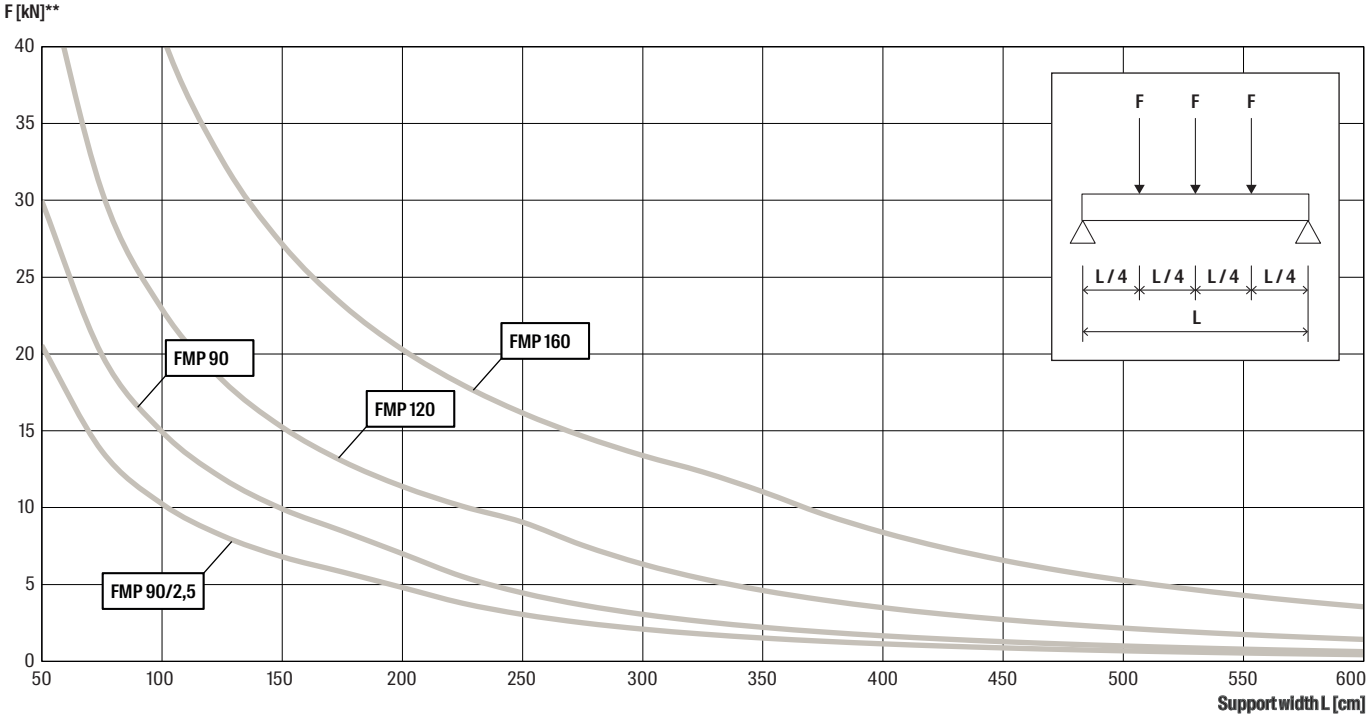


** The permissible stress is calculated acc. EN 1993; $\sigma_{rec}=f_{yk}/(\gamma_L * \gamma_{M0})$ with $\gamma_L=1,4$ and $\gamma_{M0}=1,0$. Lower value of permissible stress (shear, bending or combined) or max. defelection (L/200) is decisive

## Uniformly distributed load over the span $F_{rec} = q_{rec}$ x L

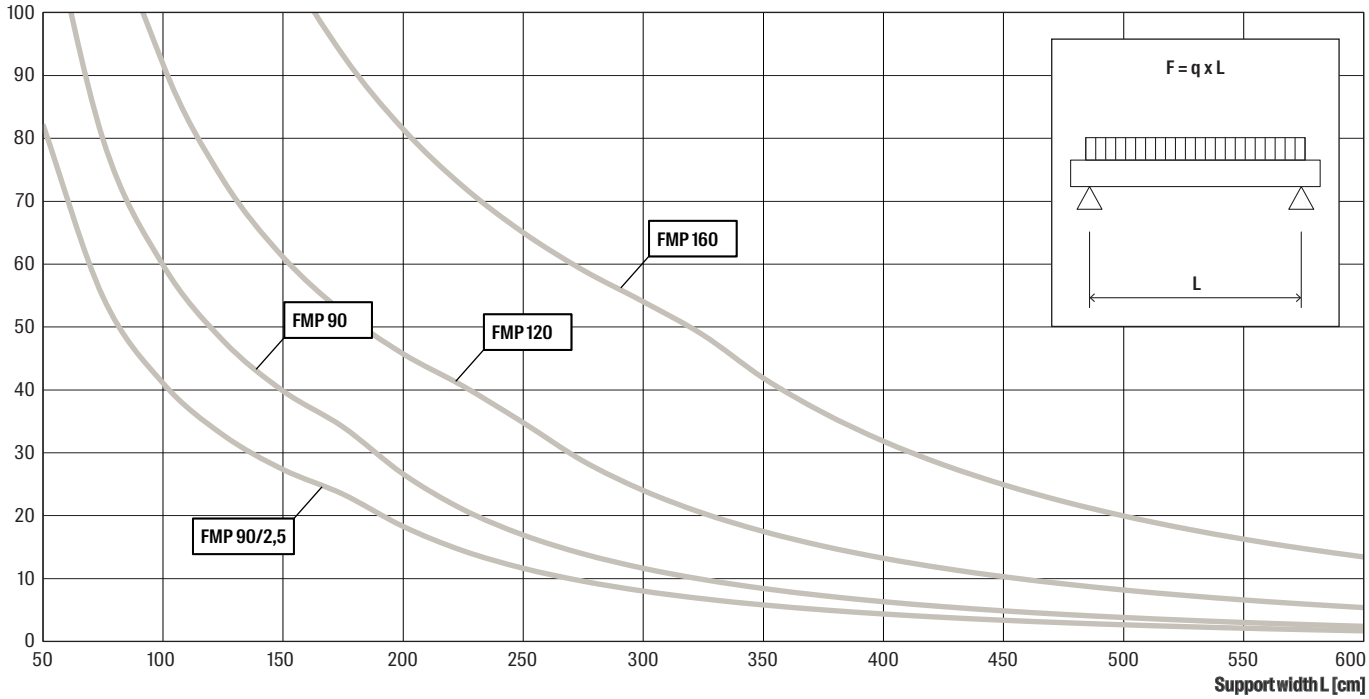


** The permissible stress is calculated acc. EN 1993; $\sigma_{rec}=f_{yk}/(\gamma_L * \gamma_{M0})$ with $\gamma_L=1,4$ and $\gamma_{M0}=1,0$. Lower value of permissible stress (shear, bending or combined) or max. defelection (L/200) is decisive

# Channel connector FMPC

Optimum connection and fastening of FMP massive profiles





Profil connection to steel structure



## Applications

- Connecting and aligning massive profiles.
- FMPC usable for FMP 90/2,5.
- FPMC 90, 120 and 160 usable for FMP 90, FMP 120 and FMP 160.
- For indoor and outdoor application.

## Advantages

- The FMPC channel connector enables the connection of the FMP massive profiles for the perfect alignment of profile.
- All FMPC profile connectors enable the conncetion by means of simple screwing through for a fast and clean mounting.
- FMPC profile connectors allow a stiff connection of profiles and high load possibilites.

## Properties

- Material FMPC: steel S420MC (material no. 1.0980) acc. to DIN EN 10149-2
- Material FMPC 90, 120, 160: steel S355JR (material no. 1.0045) acc. to EN 10025-2
- Zinc plating: hot-dip galvanised acc. to DIN EN ISO 1461
- Material screw: steel grade 8.8

## Installation FMPC

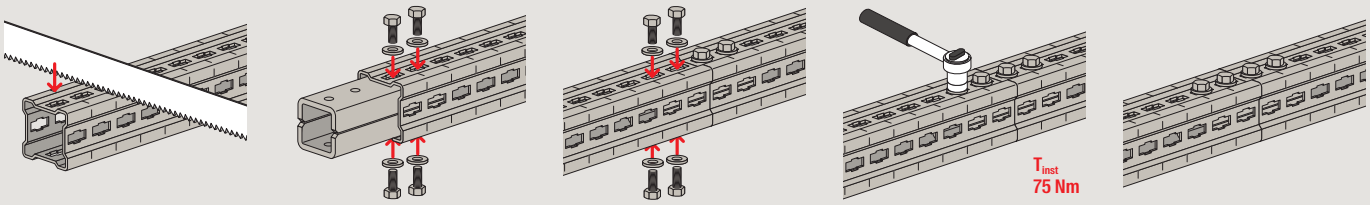


## Installation FMPC 90/120/160

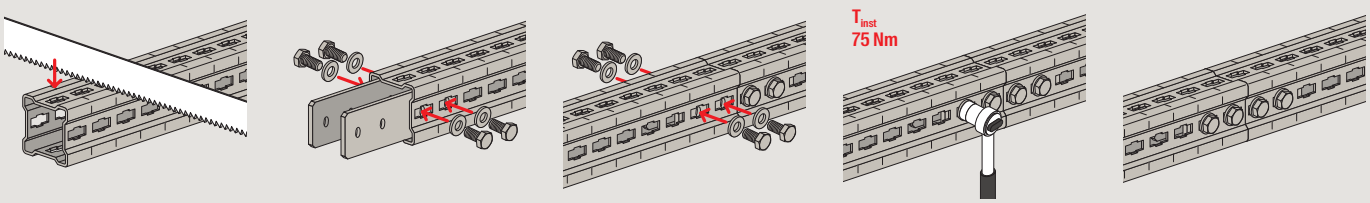

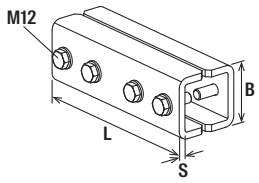


FMPC

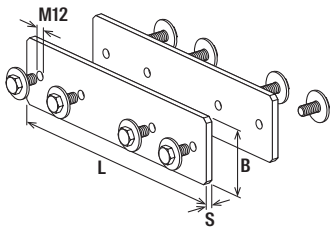


FMPC 90

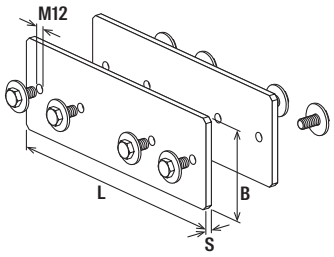


FMPC 120

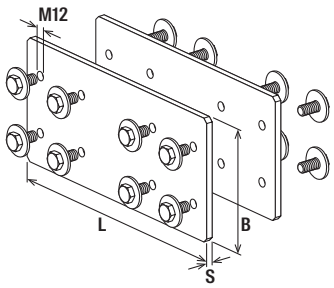


FMPC 160



## Technical data

| Item | Item no. | Length L [mm] | Width B [mm] | Thickness S [mm] | Sales unit [pcs] |
|---|---|---|---|---|---|
| **FMPC** | **547801** | 220 | 72 | 8.0 | 2 |
| **FMPC 90** | **554236** | 320 | 81 | 8.0 | 5 |
| **FMPC 120** | **554237** | 320 | 111 | 8.0 | 2 |
| **FMPC 160** | **554238** | 320 | 150 | 8.0 | 2 |

# Cantilever FMC

Mounting profiles with welded base plate for fastening heavy duty pipelines

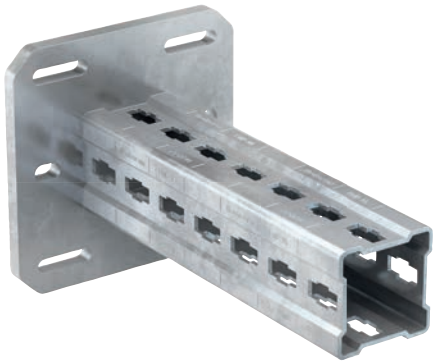

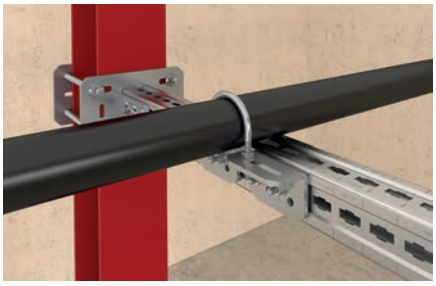

Profile traverse to steel structure



Supported cantilever



## Applications

- Simple and safe fixing of heavy duty pipelines along the wall.
- For indoor and outdoor application.

## Advantages

- The graduated length assortment of the FMC cantilever arms allows an optimal adaptation to the respective application.
- The stable base plate of the cantilever provides a secure hold for a load-bearing construction.
- The completely hot-dip galvanised product range guarantees on-site processing without subsequent coating and simplifies and accelerates the assembly process sustainably.

## Properties

- Material base plate: steel S235JR (material no. 1.0038) acc. to DIN EN 10025-2
- Material profile: steel S355MC (material no. 1.0976) acc. to DIN EN 10149-2
- Zinc plating: hot-dip galvanised

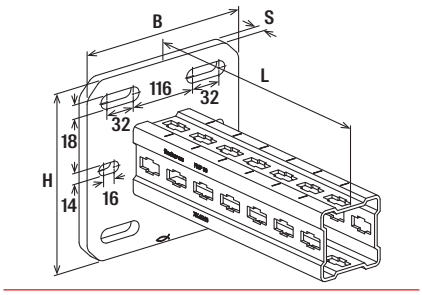


FMC

## Technical data

| Item | Item no. | Length L [mm] | Width B [mm] | Height H [mm] | Thickness S [mm] | Sales unit [pcs] |
|---|---|---|---|---|---|---|
| FMC 90-500 | 547802 | 500 | 230 | 230 | 15.0 | 1 |
| FMC 90-750 | 547803 | 750 | 230 | 230 | 15.0 | 1 |
| FMC 90-1000 | 547804 | 1,000 | 230 | 230 | 15.0 | 1 |
| FMC 90-1.500 | 547805 | 1,500 | 230 | 230 | 15.0 | 1 |

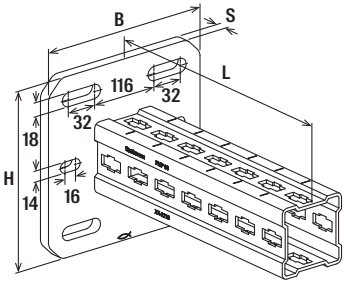


FMC

## Loads

| Item | Item no. | Max. recommended static load load case 1 $F_{rec}$ [kN] | Max. recommended static load load case 2 $F_{rec}$ [kN] | Max. recommended static load load case 3 $F_{rec}$ [kN] | Sales unit [pcs] |
|---|---|---|---|---|---|
| **FMC 90-500** | **547802** | 24.60 | 12.30 | 24.60 | 1 |
| **FMC 90-750** | **547803** | 16.40 | 8.20 | 16.40 | 1 |
| **FMC 90-1000** | **547804** | 12.30 | 5.60 | 12.30 | 1 |
| **FMC 90-1.500** | **547805** | 7.80 | 2.40 | 6.50 | 1 |

11

## Load case 1

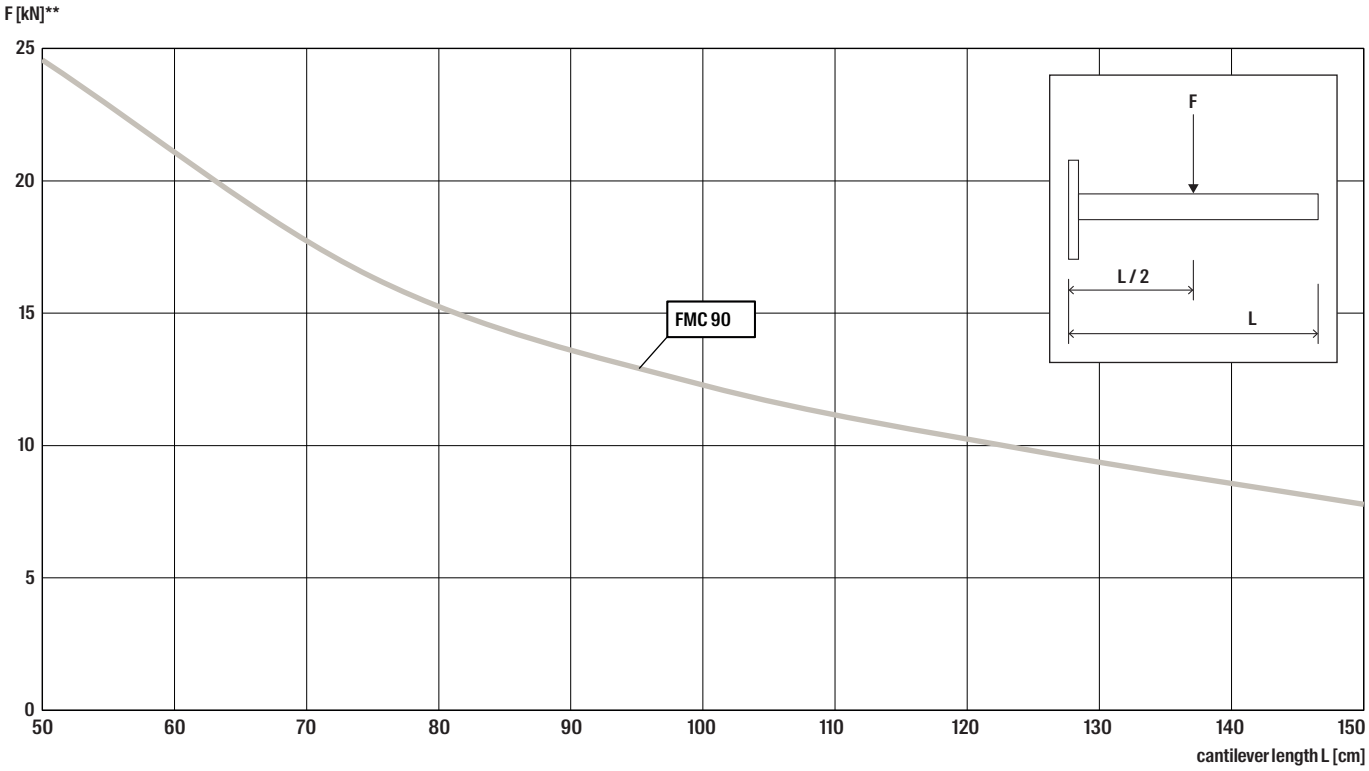


** The permissible stress is calculated acc. EN 1993; $\sigma_{rec}=f_{yk}/(\gamma_L * \gamma_{M0})$ with $\gamma_L=1,4$ and $\gamma_{M0}=1,0$. Lower value of permissible stress (shear, bending or combined) or max. defelection (L/150) is decisive

## Load case 2

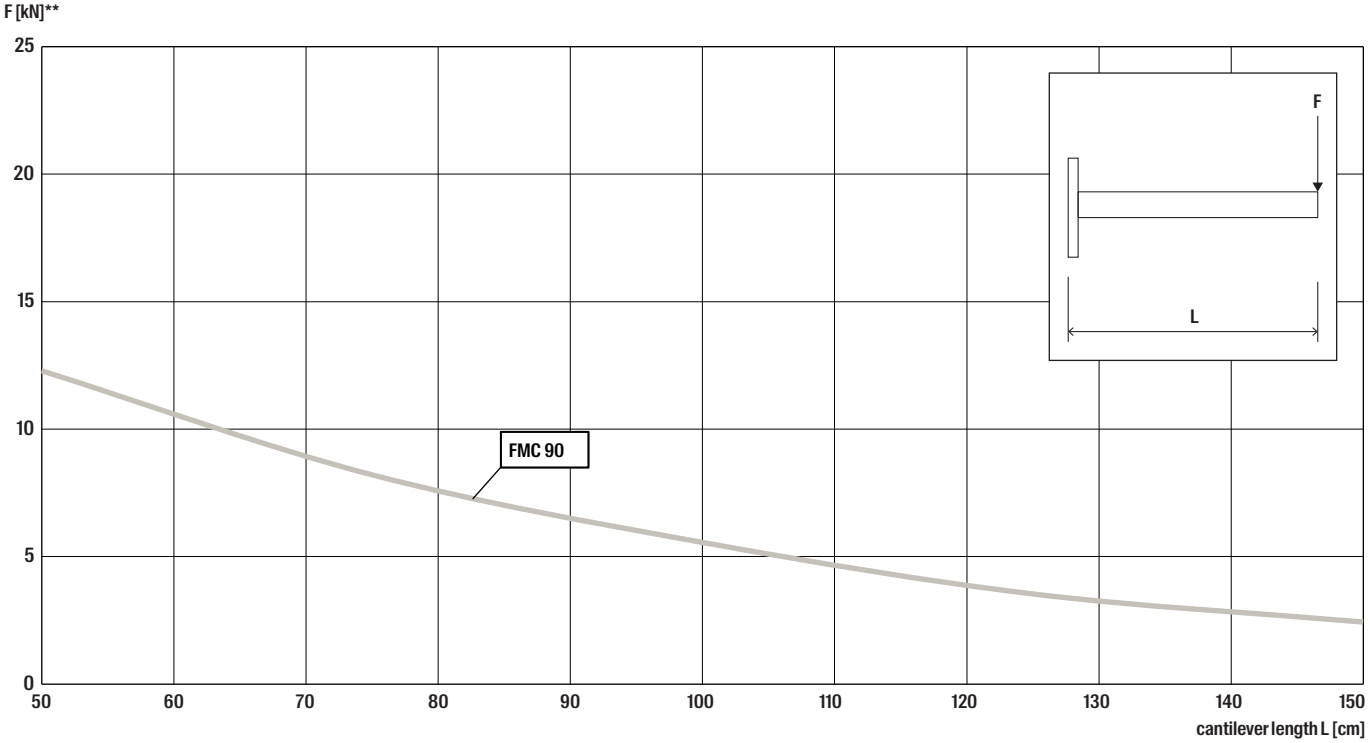


** The permissible stress is calculated acc. EN 1993; $\sigma_{rec}=f_{yk}/(\gamma_L * \gamma_{M0})$ with $\gamma_L=1,4$ and $\gamma_{M0}=1,0$. Lower value of permissible stress (shear, bending or combined) or max. defelection (L/150) is decisive

## Load case 3

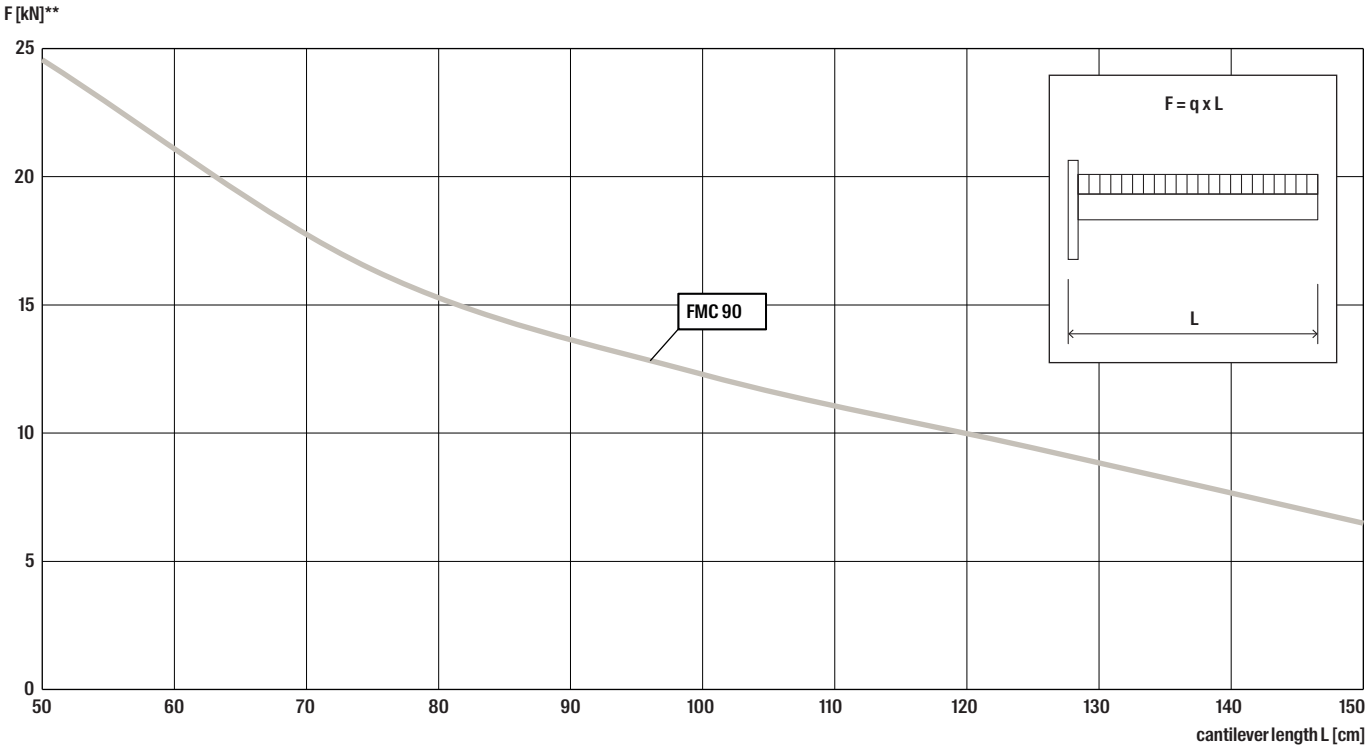


** The permissible stress is calculated acc. EN 1993; $\sigma_{rec}=f_{yk}/(\gamma_L * \gamma_{M0})$ with $\gamma_L=1,4$ and $\gamma_{M0}=1,0$. Lower value of permissible stress (shear, bending or combined) or max. defelection (L/150) is decisive

# End cap FMEC

The clip-on and accurately shaped end for the mounting profile FMP



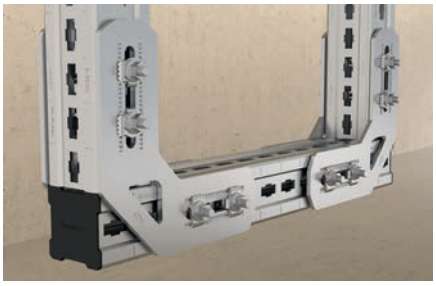

U-rack construction with flat fittings



## Applications

- Closing of profile end.

## Advantages

- Suitable for FMP 90, 120 and 160 mounting profiles and cantilever arms FMC.

## Properties

- Material: PP polypropylene, colour black




FMEC 90




FMEC 120

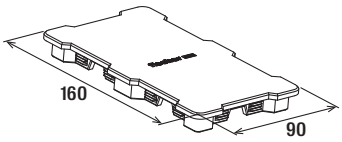


FMEC 160

## Technical data

| Item | Item no. | For profile | Sales unit [pcs] |
|---|---|---|---|
| **FMEC 90** | **547806** | FMP 90 | 100 |
| **FMEC 120** | **547807** | FMP 120 | 60 |
| **FMEC 160** | **547808** | FMP 160 | 40 |

# Hammer-head push connector FMHB

Universal connector for FMP massive profiles and construction elements



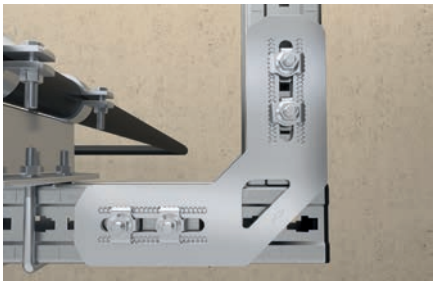

U-rack construction



## Applications

- Connecting construction elements and FMP profiles by means of plug-in connectors.
- Fastening of cables by means of threaded rods or threaded pins to the FMP profiles.
- For indoor and outdoor application.

## Properties

- Material: steel S235JR (material no. 1.0038) acc. to DIN EN 10025-2
- Zinc plating: hot-dip galvanised, acc. to DIN EN ISO 1461
- Material for hammer-head bolt: steel 8.8, similar to 1.0503 C45
- Material plastic cage: polypropylene PP, colour black
- Material safety nut: GB/T 805-1988 acc. to DIN 7967

## Installation FMHB

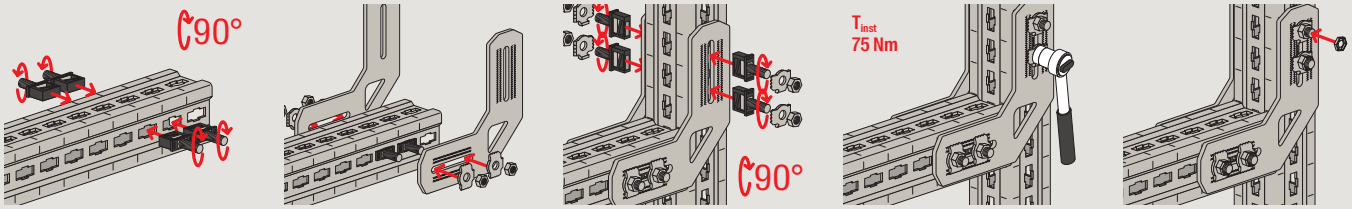

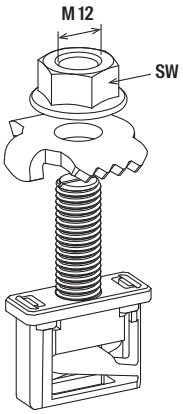


FMHB

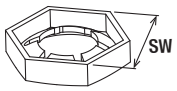


FMSB MU M12

## Technical data

| Item | Item no. | Thread<br>M | Width across nut<br>SW<br>[mm] | Sales unit<br>[pcs] |
|---|---|---|---|---|
| **FMHB** | **547809** | – | 18 | 100 |
| **FMSB MU M12** | **547810** | M12 | 19 | 100 |

# Internal thread connector FMHI

The internal thread connector is the connector for all external thread elements on the FMP profiles





FUS channel connection

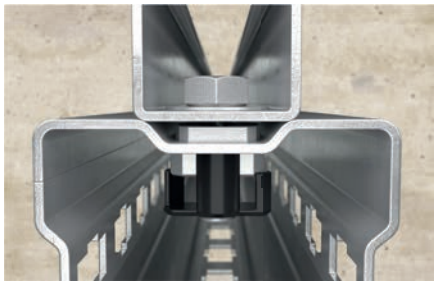

Installation of pipe clamps



## Applications

- Connecting construction elements and FMP profiles by means of plug-in connectors.
- Fastening of cables by means of threaded rods or threaded pins to the FMP profiles.
- For indoor and outdoor application.

## Advantages

- The unique hammerhead internal thread connector makes it easy to connect different elements with base plates or FUS channels using an M12 screw.
- The special design of the hammerhead internal thread connector enables retrofitting on existing superstructures made of FMP mounting profiles and permanently simplifies the attachment of brackets and pipe clamps.
- The flexible hammerhead internal thread connector additionally enables through-hole assembly by a screw in M12 with various construction elements.

## Properties

- Material of the plate: steel S355MC (material no. 1.0037) acc. to DIN EN 10149-2
- Zinc plating: hot-dip galvanised
- Material for hammer-head bolt: steel 8.8, similar to 1.0503 C45
- Material plastic cage: polypropylene PP, colour black

## Installation FMHI

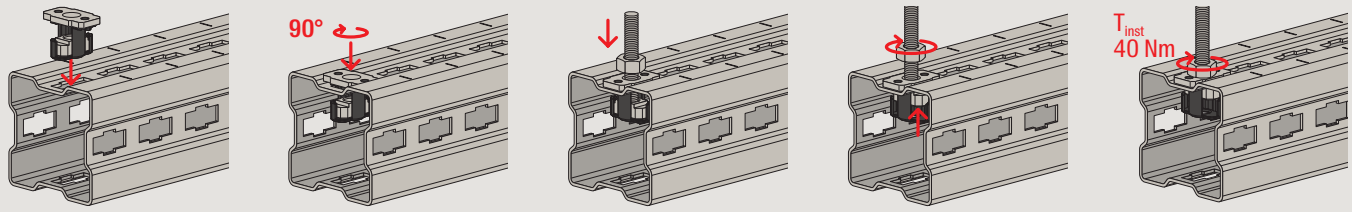

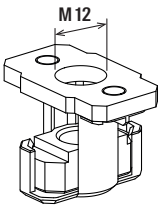


FMHI

## Technical data

| | Item no. | Thread<br>M | Installation torque<br>$T_{inst}$<br>[Nm] | Max. recom. static load (centr. tension)<br>$N_{rec}$<br>[kN] | Sales unit<br>[pcs] |
|---|---|---|---|---|---|
| **Item** | | | | | |
| **Internal thread connector FMHI M12** | **563108** | M12 | 40 | 10.00 | 100 |

# Transportation connector FMTC 90

The reusable connector for the transport of FMP mounting profiles





Transportation of profile structures



## Applications

- Temporary use for the transportation of profile structures.
- For indoor and outdoor application.

## Advantages

- The FMTC 90 transportation connector can be easily and securely mounted on the ends of the FMP 90 massive profile using two FMHB hammer-head push connectors and can also be dismantled again.
- The opening in the cover plate allows connection with threaded bolts or with eyebolts and nuts ≤ ø 21 mm as a mounting for transporting pre-assembled frame constructions.
- The robust construction of the FMTC 90 ensures long-lasting reusability as a transportation connector.

## Properties

- Base plate: steel S355 (material no. 1.0976) acc. to DIN EN 10149-2
- Profile mount: steel S235JR (material no. 1.0038) acc. to DIN EN 10025-2
- Zinc plating: hot-dip galvanised acc. to DIN EN ISO 1461

## FMTC 90

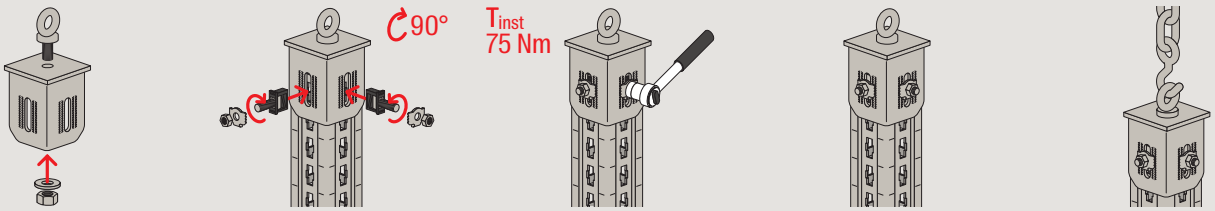

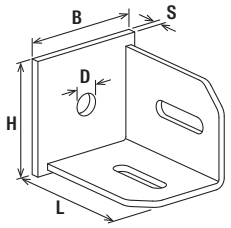


FMTC 90

## Technical data

| | Item no. | Length L [mm] | Width B [mm] | Height H [mm] | Thickness S [mm] | Hole-Ø D [mm] | Sales unit [pcs] |
|---|---|---|---|---|---|---|---|
| **Item** | | | | | | | |
| **FMTC 90** | **568825** | 110 | 110 | 130 | 8.0 | 21 | 2 |

# Connecting element FMCE

Tailor-made fixing massive profiles FMP

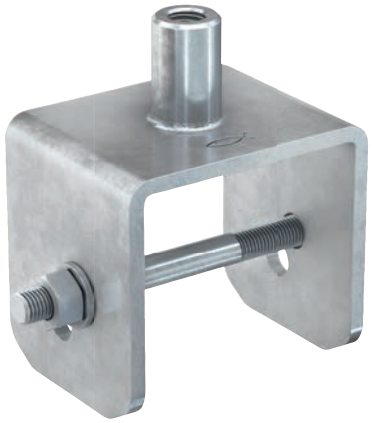



Pipe clamp connection to profile



## Applications

- Fixing of pipes using threaded rods.
- For indoor and outdoor application.

## Advantages

- The U-shaped connecting elements allow an easy connection of pipe clamps.
- Supplying the connecting element as a set with the necessary screw, hexagonal nut and washer ensures error-free installation.

## Properties

- Material: steel S235JR (material no. 1.0038) acc. to DIN EN 10025-2
- Zinc plating: hot-dip galvanised acc. to DIN EN ISO 1461
- Material screw: steel grade 8.8

## Installation FMCE

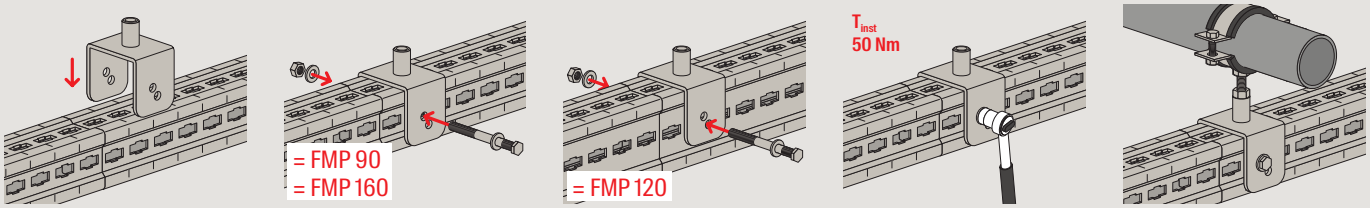

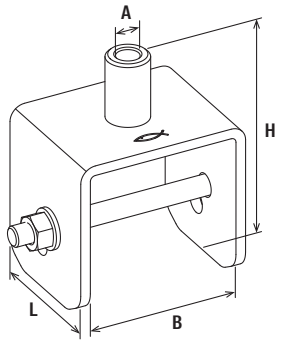


FMCE

## Technical data

| Item | Item no. | Thread A | Length L [mm] | Width B [mm] | Height H [mm] | Sales unit [pcs] |
|---|---|---|---|---|---|---|
| **FMCE M12/M16** | **547815** | M12 / M16 | 80 | 91 | 134 | 10 |
| **FMCE 1/2“** | **547816** | 1/2“ | 80 | 91 | 134 | 10 |
| **FMCE 3/4“** | **547817** | 3/4“ | 80 | 91 | 134 | 10 |

# Connecting element FMCE-L

Tailor-made fixing of massive profiles FMP



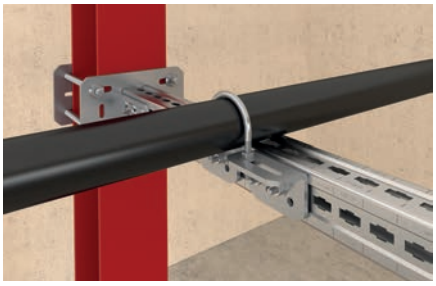

Profile traverse to steel structure



## Applications

- Fixing of pipes using threaded rods or set screws.
- For indoor and outdoor application.

## Advantages

- The L-shaped connecting elements allow pipe clamps, U-bolts and elements with base plates to be easily connected.
- The L-connector FMCE-L can easily be attached to all 3 sizes of the FMP mounting profile after the FMHB hammer-head connector has been pre-positioned.

## Properties

- Material: steel S235JR (material no. 1.0038) acc. to DIN EN 10025-2
- Zinc plating: hot-dip galvanised acc. to DIN EN ISO 1461

## Installation FMCE-L

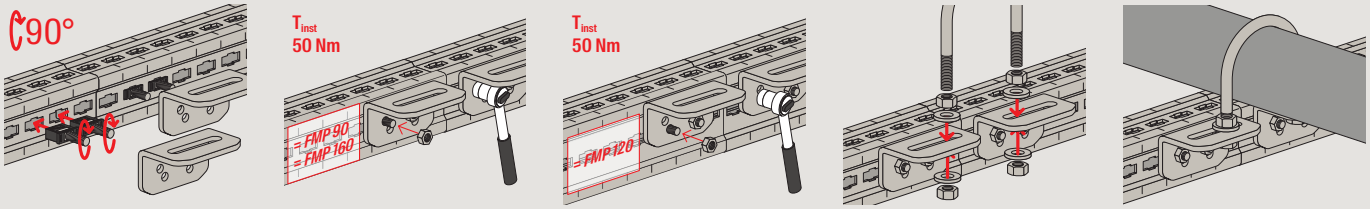

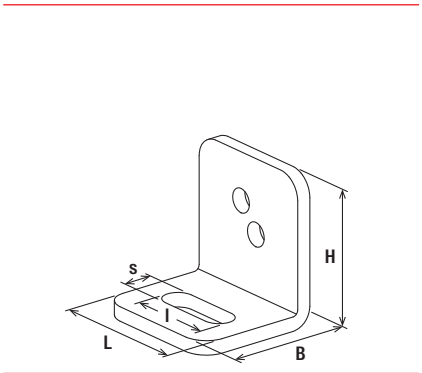


FMCE-L short

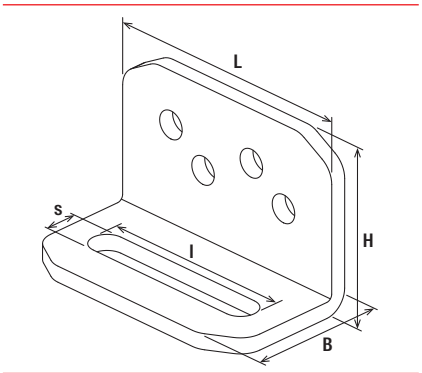


FMCE-L

## Technical data

| Item | Item no. | Slot<br>l x s<br>[mm] | Length<br>L<br>[mm] | Width<br>B<br>[mm] | Height<br>H<br>[mm] | Sales unit<br>[pcs] |
|---|---|---|---|---|---|---|
| **FMCE-L short M12** | **554239** | 50 x 13.5 | 80 | 71 | 84 | 20 |
| **FMCE-L short M16** | **554240** | 50 x 17.5 | 80 | 71 | 84 | 20 |
| **FMCE-L short M20** | **554241** | 50 x 22 | 80 | 71 | 84 | 20 |
| **FMCE-L M12** | **547818** | 100 x 13.5 | 130 | 71 | 84 | 10 |
| **FMCE-L M16** | **547819** | 100 x 17.5 | 130 | 71 | 84 | 10 |
| **FMCE-L M20** | **547820** | 100 x 22 | 130 | 71 | 84 | 10 |

# Saddle flange FMSF

Optimum connection and fastening of FMP massive profiles

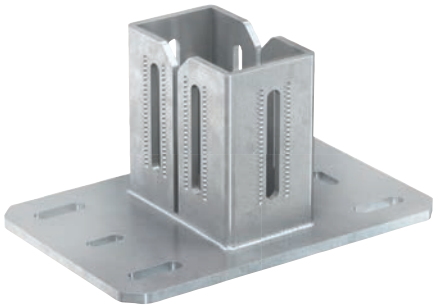



U-rack at profile traverse



## Applications

- For solid connections between the massive profile and building structures.
- For indoor and outdoor application.

## Advantages

- The design of the saddle flange FMSF enables fast and secure mounting by fitting inside the profile.
- The clever design and dimensions of the base plate of the FMSF saddle flange offers the optimum load level depending on the construction and ensures a secure hold.

## Properties

- Material: steel S235JR (material no. 1.0038) acc. to DIN EN 10025-2
- Zinc plating: hot-dip galvanised acc. to DIN EN ISO 1461

## Installation FMSF

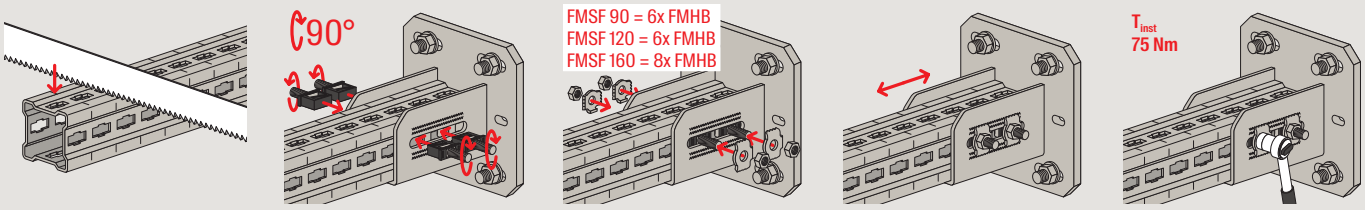

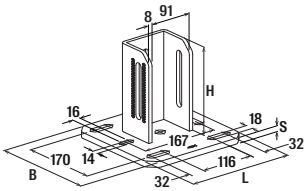


FMSF 90S

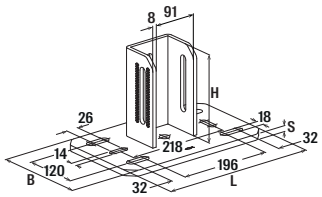


FMSF 90M

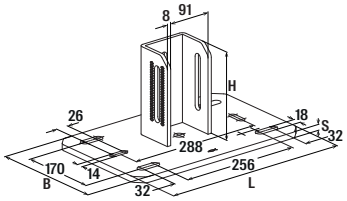


FMSF 90L

## Technical data

| Item | Item no. | For profile | For steel beam width [mm] | Length L [mm] | Width B [mm] | Height H [mm] | Thickness S [mm] | Sales unit [pcs] |
|---|---|---|---|---|---|---|---|---|
| **FMSF 90S** | **547821** | FMP 90 | 100 - 160 | 230 | 230 | 180 | 12.0 | 1 |
| **FMSF 90M** | **547822** | FMP 90 | 180 - 240 | 330 | 200 | 180 | 12.0 | 1 |
| **FMSF 90L** | **547823** | FMP 90 | 240 - 300 | 400 | 250 | 180 | 12.0 | 1 |
| **FMSF 120S** | **547824** | FMP 120 | 100 - 160 | 230 | 230 | 180 | 12.0 | 1 |
| **FMSF 120M** | **547825** | FMP 120 | 180 - 240 | 330 | 200 | 180 | 12.0 | 1 |
| **FMSF 120L** | **547826** | FMP 120 | 240 - 300 | 400 | 250 | 180 | 12.0 | 1 |
| **FMSF 160M** | **547827** | FMP 160 | 180 - 240 | 330 | 200 | 180 | 12.0 | 1 |
| **FMSF 160L** | **547828** | FMP 160 | 240 - 300 | 400 | 250 | 180 | 12.0 | 1 |



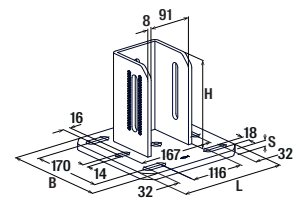


FMSF 120S

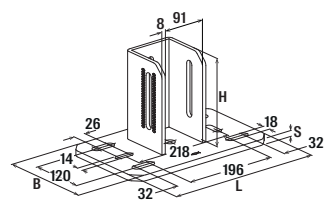


FMSF 120M

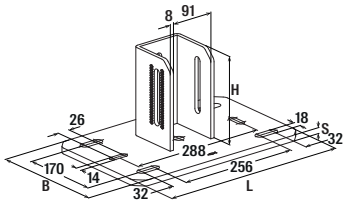


FMSF 120L

## Technical data

| Item | Item no. | For profile | For steel beam width [mm] | Length L [mm] | Width B [mm] | Height H [mm] | Thickness S [mm] | Sales unit [pcs] |
|---|---|---|---|---|---|---|---|---|
| **FMSF 120S** | **547824** | FMP 120 | 100 - 160 | 230 | 230 | 180 | 12.0 | 1 |
| **FMSF 120M** | **547825** | FMP 120 | 180 - 240 | 330 | 200 | 180 | 12.0 | 1 |
| **FMSF 120L** | **547826** | FMP 120 | 240 - 300 | 400 | 250 | 180 | 12.0 | 1 |
| **FMSF 160M** | **547827** | FMP 160 | 180 - 240 | 330 | 200 | 180 | 12.0 | 1 |
| **FMSF 160L** | **547828** | FMP 160 | 240 - 300 | 400 | 250 | 180 | 12.0 | 1 |
| **FMSF 90S** | **547821** | FMP 90 | 100 - 160 | 230 | 230 | 180 | 12.0 | 1 |
| **FMSF 90M** | **547822** | FMP 90 | 180 - 240 | 330 | 200 | 180 | 12.0 | 1 |
| **FMSF 90L** | **547823** | FMP 90 | 240 - 300 | 400 | 250 | 180 | 12.0 | 1 |

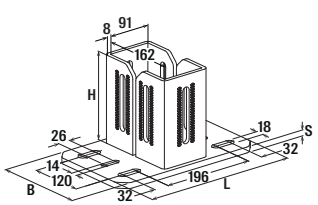


FMSF 160M

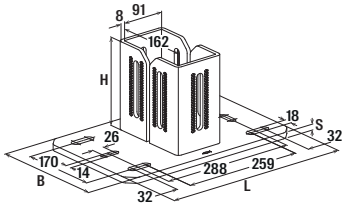


FMSF 160L

## Technical data

| Item | Item no. | For profile | For steel beam width [mm] | Length L [mm] | Width B [mm] | Height H [mm] | Thickness S [mm] | Sales unit [pcs] |
|---|---|---|---|---|---|---|---|---|
| **FMSF 160M** | **547827** | FMP 160 | 180 - 240 | 330 | 200 | 180 | 12.0 | 1 |
| **FMSF 160L** | **547828** | FMP 160 | 240 - 300 | 400 | 250 | 180 | 12.0 | 1 |
| **FMSF 120S** | **547824** | FMP 120 | 100 - 160 | 230 | 230 | 180 | 12.0 | 1 |
| **FMSF 120M** | **547825** | FMP 120 | 180 - 240 | 330 | 200 | 180 | 12.0 | 1 |
| **FMSF 120L** | **547826** | FMP 120 | 240 - 300 | 400 | 250 | 180 | 12.0 | 1 |
| **FMSF 90S** | **547821** | FMP 90 | 100 - 160 | 230 | 230 | 180 | 12.0 | 1 |
| **FMSF 90M** | **547822** | FMP 90 | 180 - 240 | 330 | 200 | 180 | 12.0 | 1 |
| **FMSF 90L** | **547823** | FMP 90 | 240 - 300 | 400 | 250 | 180 | 12.0 | 1 |

# Base plate FMSF BP

Optimum connection and fastening saddle flanges and cantilevers to steel- and concrete beams

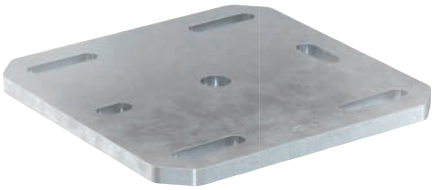



Connection to steel support



## Applications

- For solid connections between the massive profile and building structures.
- For indoor and outdoor application.

## Advantages

- The stable design and size graduations of the FMSF BP base plates offer optimum fixing ensuring and secure hold.
- The FMSF BP base plate is identical in construction to the base plates of the FMSF saddle flanges and enables simple connection by means of threaded rods for secure mounting on steel beams.

## Properties

- Material: steel S235JR (material no. 1.0038) acc. to DIN EN 10025-2
- Zinc plating: hot-dip galvanised

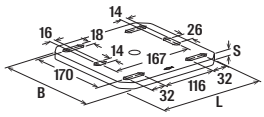


FMSF BP S

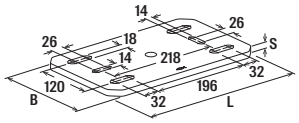


FMSF BP M

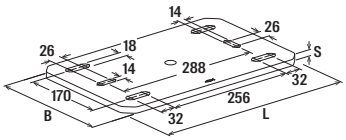


FMSF BP L

## Technical data

| Item | Item no. | For steel beam width [mm] | Length L [mm] | Width B [mm] | Thickness S [mm] | Sales unit [pcs] |
|---|---|---|---|---|---|---|
| **FMSF BP S** | **547829** | 100 - 160 | 230 | 230 | 12.0 | 1 |
| **FMSF BP M** | **547830** | 180 - 240 | 330 | 200 | 12.0 | 1 |
| **FMSF BP L** | **547831** | 240 - 300 | 400 | 250 | 12.0 | 1 |

# Angle bracket FMASF 90

The strong connection of FMP massive profiles for frame racks

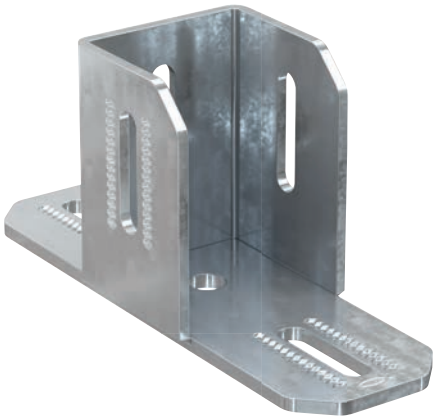



Profile structures



## Applications

- Construction of multidimensional profile structures.
- Constructing variable supporting structures from profiles.
- For indoor and outdoor application.

## Advantages

- The installation heights of the angle bracket FMASF 90 enable a connection matching the installation heights of the FMP 90 massive profile, thus allowing even more versatile constructions.
- The design of the angle bracket FMASF 90 with long slots and grating to match the FMHB hammer-head push connector enables optimum adjustment of the structure and simplifies the assembly process.
- The strong construction of the angle bracket FMASF 90 allows the transmission of high loads in the application as an angle or saddle flange.

## Properties

- Base plate: steel S355 (material no. 1.0976) acc. to DIN EN 10149-2
- Profile mount: steel S235JR (material no. 1.0038) acc. to DIN EN 10025-2
- Zinc plating: hot-dip galvanised acc. to DIN EN ISO 1461

## FMASF 90

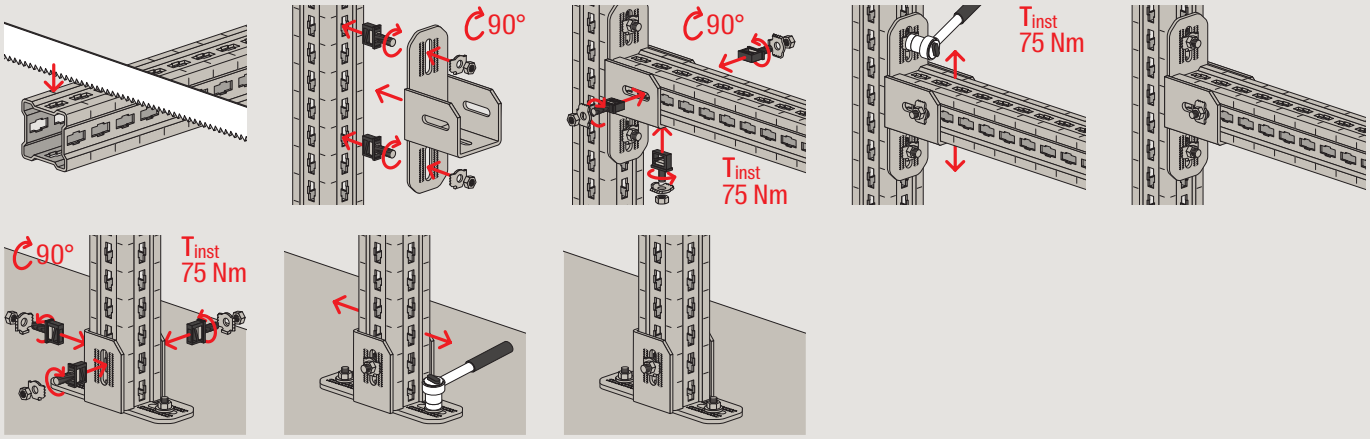

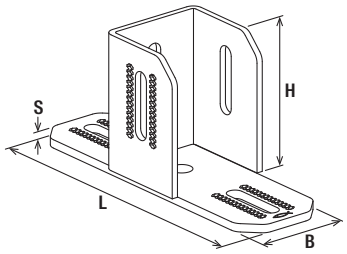


FMASF 90

## Technical data

| | Item no. | Length L [mm] | Width B [mm] | Height H [mm] | Thickness S [mm] | Sales unit [pcs] |
|---|---|---|---|---|---|---|
| **Item** | | | | | | |
| **FMASF 90** | **568823** | 300 | 90 | 130 | 8.0 | 4 |

11

# Variable bracket FMVB

Variable connection of FMP massive profiles to each other and to the substrate





Supported cantilever



## Applications

- Constructions of FMP massive profiles at an angle of 0° to 180°.
- Mounting elements for the design of supporting structures with the FMP massive profiles.
- Element for the stable construction of connections between channels and building structures.
- For indoor and outdoor application.

## Advantages

- The variable construction elements allow stiffening or support of the profile construction at any angle and are therefore suited for versatile use.
- The stable design and the size graduation of the FMVB base plates offer the optimum fixing option depending on the construction and ensure a secure hold.
- The FMVB variable bracket with slot and grating to accommodate the toothed plate of the FMHB hammer-head push connector allows optimum adjustment of the supported profile for simple and safe installation.
- Supplying the FMVB articles as a set with the necessary screw, hexagonal nut and washer ensures error-free installation.

## Properties

- Material: steel S235JR (material no. 1.0038) acc. to DIN EN 10025-2
- Zinc plating: hot-dip galvanised acc. to DIN EN ISO 1461
- Material: steel grade 8.8

## Installation FMVB

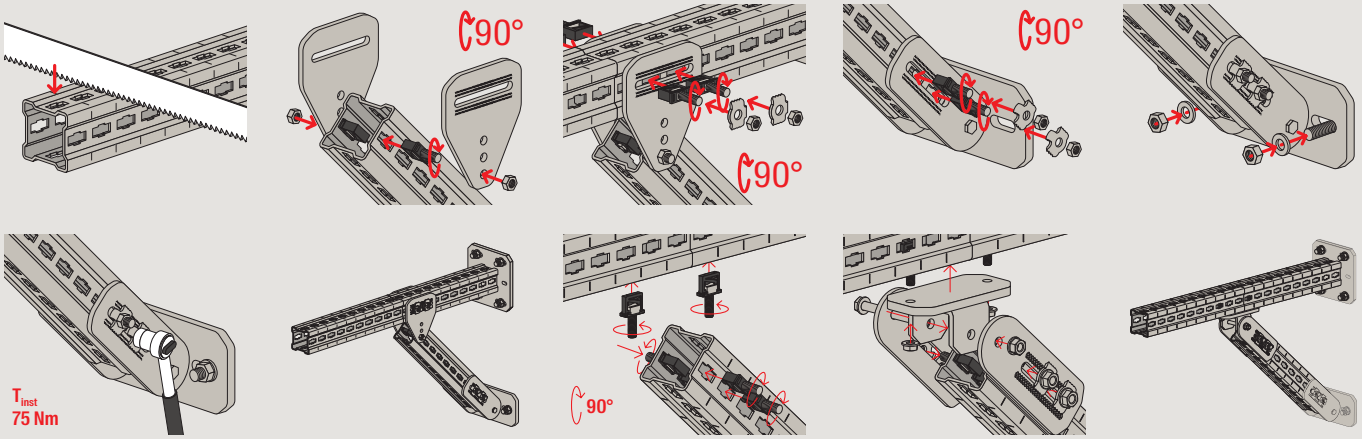

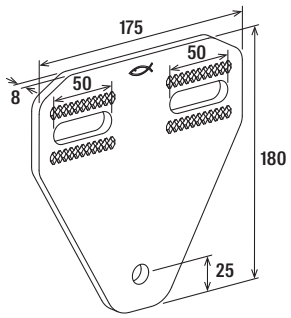


FMVB P

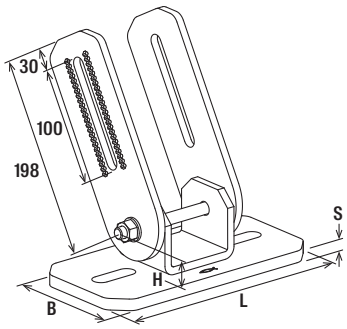


FMVB BP

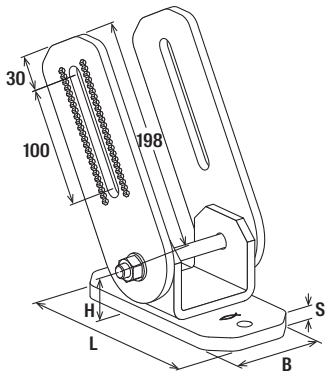


FMVB P II

## Technical data

| Item | Item no. | Length<br>l<br>[mm] | For steel beam width<br>[mm] | Width<br>B<br>[mm] | Height<br>H<br>[mm] | Thickness<br>S<br>[mm] | Sales unit<br>[pcs] |
|---|---|---|---|---|---|---|---|
| **FMVB-P** | **547832** | 175 | – | – | 180 | 8.0 | 4 |
| **FMVB BP S** | **547833** | 250 | 100 - 160 | 125 | 40.5 | 12.0 | 2 |
| **FMVB BP M** | **547834** | 330 | 180 - 240 | 125 | 40.5 | 15.0 | 2 |
| **FMVB BP L** | **547835** | 400 | 240 - 300 | 125 | 40.5 | 15.0 | 2 |
| **FMVB P II** | **554242** | 190 | – | 90 | 67 | 12.0 | 2 |

# Beam clamp FMBC

Clamping bracket for fastening FMP massive profiles to steel beams





Profile fixing with beam clamp



## Applications

- Attachment to the steel beam with two beam clamps on each side.
- For indoor and outdoor application.

## Advantages

- The design of the beam clamp FMBC makes it possible to fasten to steel beams without drilling or welding.
- The large clamping range of the beam clamp FMBC allows it to be attached to all common beam flanges.
- The design of the beam clamp FMBC in the 3 matching bracket heights for the FMP massive profiles ensures fast mounting and easy moving of the profiles for adjustment.

## Properties

- Material: cast iron with ductile iron (QT450-10 (material no. 5.3107) acc. to EN 1563
- Material U-bolt: steel S235JR (material no. 1.0038) acc. to DIN EN 10025-2
- Zinc plating: hot-dip galvanised acc. to DIN EN ISO 1461
- Material hexagon nut: steel resistance class 8

## Installation FMBC

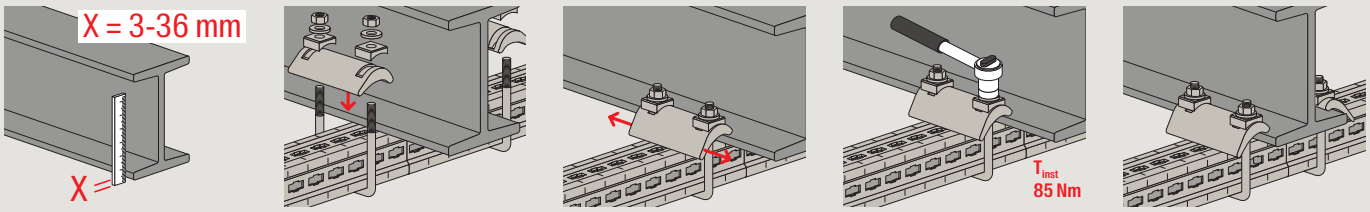

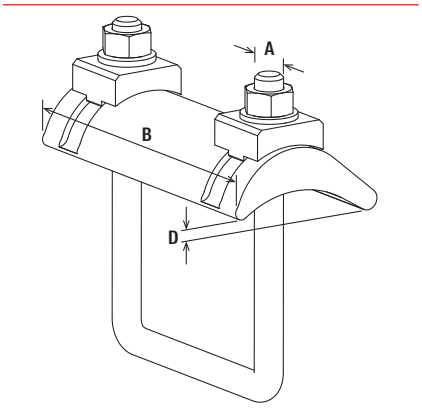


FMBC

## Technical data

| Item | Item no. | For profile | Thread A | Width B [mm] | Clamping range D [mm] | Sales unit [pcs] |
|---|---|---|---|---|---|---|
| **FMBC 90** | **547836** | FMP 90 | M12 | 140 | 3 - 36 | 4 |
| **FMBC 120** | **547837** | FMP 120 | M12 | 140 | 3 - 36 | 4 |
| **FMBC 160** | **547838** | FMP 160 | M12 | 140 | 3 - 36 | 4 |

# Beam clamp FMBC M12 and M16

Efficient connection of base plates to steel beams without welding and drilling





Fixing with beam clamp



## Applications

- Simple fixing by clamping the base plate to the steel beams.
- For fixing FMSF S and FMSF BP S use FMBC M12. For FMS and FMSF BP M and L use FMBC M16.
- For indoor and outdoor application.

## Advantages

- The design of the beam clamp FMBC M12 and M16 makes it possible to fix to steel beams without drilling or welding.
- The large clamping range of the FMBC M12 and M16 allows it to be attached to all common beam flanges.
- The design of the FMBC beam clamp M12 and M16 in the 3 matching bracket heights for the FMP massive profiles ensures fast mounting and easy moving of the profiles for adjustment.

## Properties

- Material: cast iron with ductile iron QT450-10 (material no. 5.3107) acc. to EN 1563
- Zinc plating: hot-dip galvanised acc. to DIN EN ISO 1461
- Material screw: steel grade 8.8

## Installation FMBC M

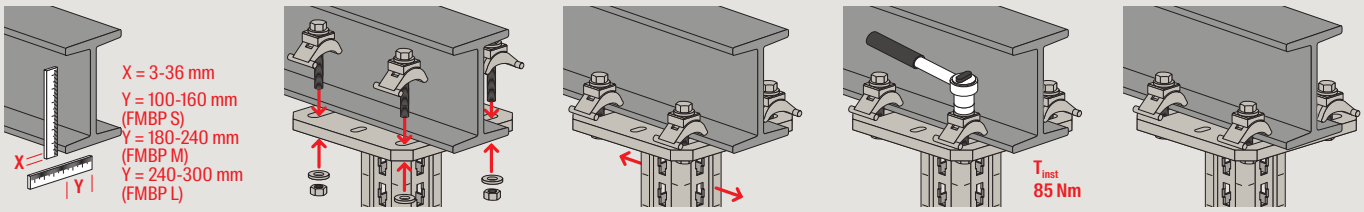

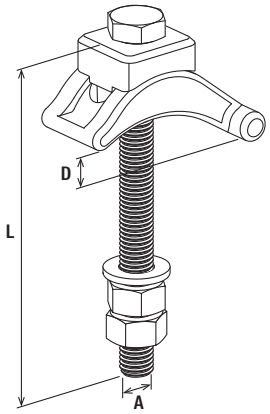


FMBC M

## Technical data

| Item | Item no. | Thread<br>A | Length<br>L<br>[mm] | Clamping range<br>D<br>[mm] | Sales unit<br>[pcs] |
|---|---|---|---|---|---|
| **FMBC M12** | **547839** | M12 | 130 | 3 - 36 | 16 |
| **FMBC M16** | **547840** | M16 | 150 | 3 - 36 | 12 |

# Flat fitting FMFF 90°

Stable right-angled connection of FMP massive profiles to each other



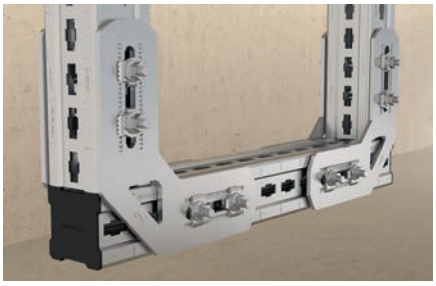

U-rack construction with flat fittings



## Applications

- Element for stable right-angled connection of massive profiles with 2 flat connectors on each.
- For indoor and outdoor application.

## Advantages

- The flat angle FMFF 90° is used in pairs and offers a high load capacity when connecting the FMP mounting profiles for the construction of massive applications.
- The design of the 90° flat angle FMFF with slotted holes and grating to accommodate the toothed plate of the FMHB hammer head connector allows optimum adjustment of the construction and simplifies the assembly process.

## Properties

- Material: steel S235JR (material no. 1.0038) acc. to DIN EN 10025-2
- Zinc plating: hot-dip galvanised acc. to DIN EN ISO 1461

## Installation FMFF

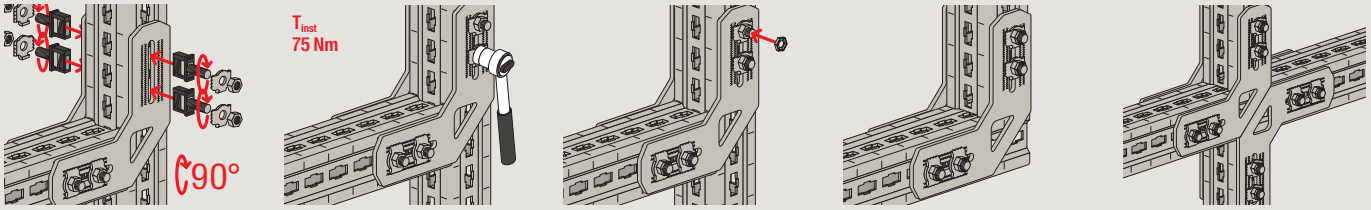

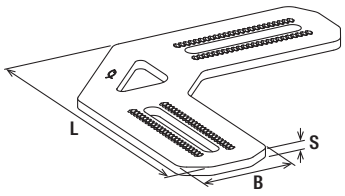


FMFF

## Technical data

| | Item no. | Length<br>l<br>[mm] | Width<br>B<br>[mm] | Thickness<br>S<br>[mm] | Sales unit<br><br>[pcs] |
|---|---|---|---|---|---|
| **Item** | | | | | |
| **FMFF 90°** | **547841** | 282 | 90 | 8.0 | 1 |

# Mounting angle FMA 3 and FMA 4

The application-oriented connection of FMP mounting profiles with each other



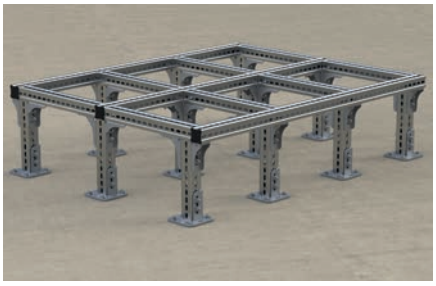

3D frame construction



## Applications

- Connecting elements for multi-dimensional channel constructions.
- For indoor and outdoor application.

## Advantages

- The different construction types of the mounting angle FMA 3 and FMA 4 enable an application oriented connection of the massive profiles FMP and make the construction possibilities even more flexible.
- The version of the mounting angle FMA with slotted holes and grating to accommodate the toothed plate of the hammer bolt connector FMHB enables the optimised adaption of the costruction and simplifies the mounting process.

## Properties

- Material: steel S235JR (material no. 1.0038) acc. to DIN EN 10025-2
- Zinc plating: hot-dip galvanised acc. to DIN EN ISO 1461

## Installation FMA 3

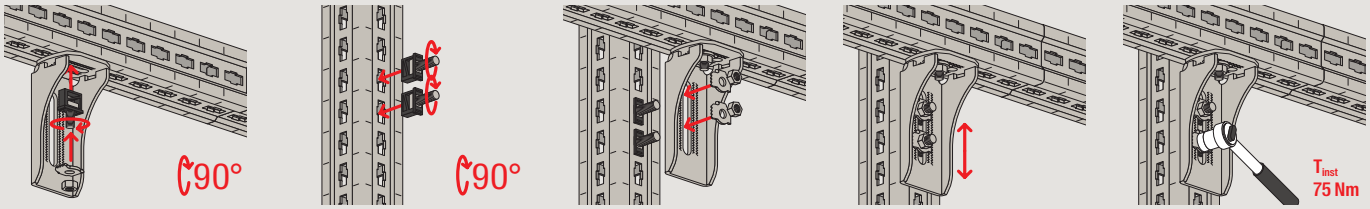


## Installation FMA 4

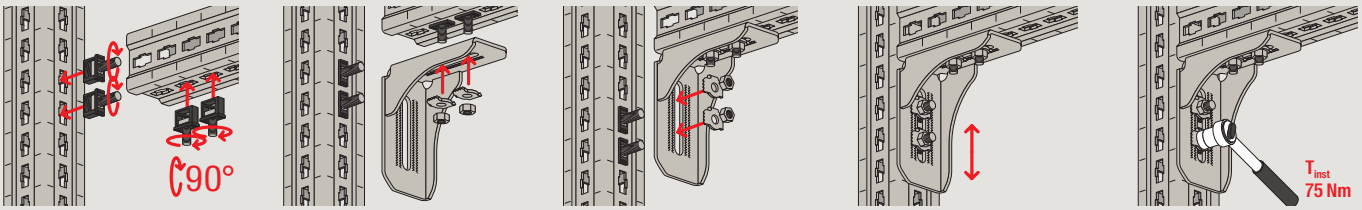

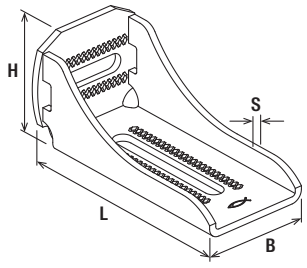


FMA 3

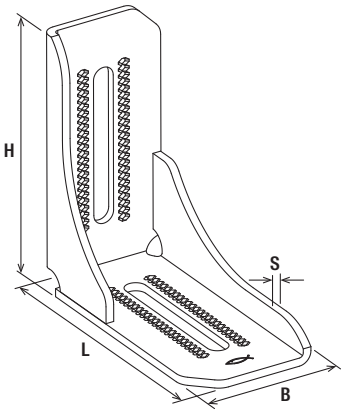


FMA 4

## Technical data

| Item | Item no. | Length L [mm] | Width B [mm] | Height H [mm] | Thickness S [mm] | Sales unit [pcs] |
|---|---|---|---|---|---|---|
| **FMA 3** | **547842** | 190 | 90 | 90 | 6.0 | 10 |
| **FMA 4** | **547843** | 190 | 90 | 190 | 6.0 | 8 |

# Mounting angle FMA

The application-oriented connection of FMP massive profiles to built up racks





Frame constructions



## Applications

- Mounting elements for the design of supporting structures with the FMP massive profiles.
- For indoor and outdoor application.

## Advantages

- The different construction heights of the mounting angle FMA enable the application-oriented connection according to the 3 different construction heights of the massive profiles FMP.
- The version of the mounting angle FMA with slotted holes and grating to accommodate the toothed plate of the hammer bolt connector FMHB enables the optimized adaption of the construction and simplifies the mounting process.
- Supplying the FMA articles as a set with the necessary screws, hexagonal nuts and washers ensures error-free installation.

## Properties

- Material: steel S235JR (material no. 1.0038) acc. to DIN EN 10025-2
- Zinc plating: hot-dip galvanised
- Material screw: steel grade 8.8

## Installation FMA

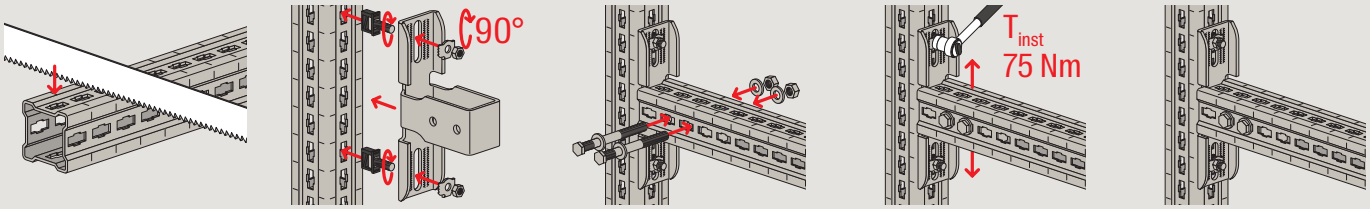

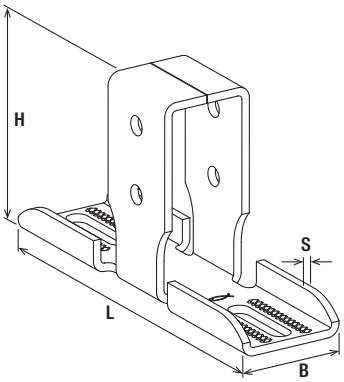


FMA 90

## Technical data

| | Item no. | Length L [mm] | Width B [mm] | Height H [mm] | Thickness S [mm] | Sales unit [pcs] |
|---|---|---|---|---|---|---|
| **Item** | | | | | | |
| **FMA 90** | **547844** | 277.5 | 77.5 | 148 | 6.0 | 4 |
| **FMA 120** | **547845** | 277.5 | 77.5 | 148 | 6.0 | 4 |
| **FMA 160** | **547846** | 350 | 77.5 | 148 | 6.0 | 4 |

# System connector FMA-FUS

The system connection of FMP massive profiles and FUS mounting channels

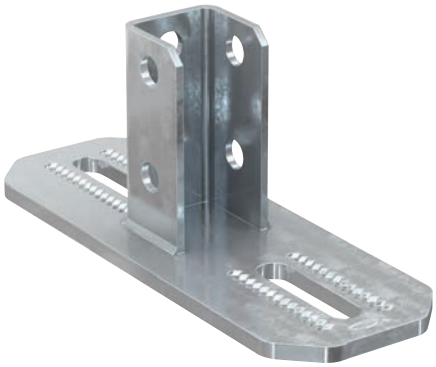



Multidimensional channel structures



## Applications

- Construction of multidimensional profile structures.
- Constructing variable supporting structures from profiles.
- For indoor and outdoor application.

## Advantages

- The FMA-FUS system connector, when used as a saddle flange, allows the mounting of FUS mounting channels in various heights by means of screw connections with the FCN Clix P channel nut.
- The design of the FMA-FUS system connector with long slots and grating to match the FMHB hammer-head push connector enables optimum adjustment of the structure and simplifies the assembly process.
- The strong construction of the FMA-FUS system connector allows optimum transmission of the applied loads in the application as an angle.

## Properties

- Base plate: steel S355 (material no. 1.0976) acc. to DIN EN 10149-2
- Profile mount: steel S235JR (material no. 1.0038) acc. to DIN EN 10025-2
- Zinc plating: hot-dip galvanised

## Installation FMA-FUS

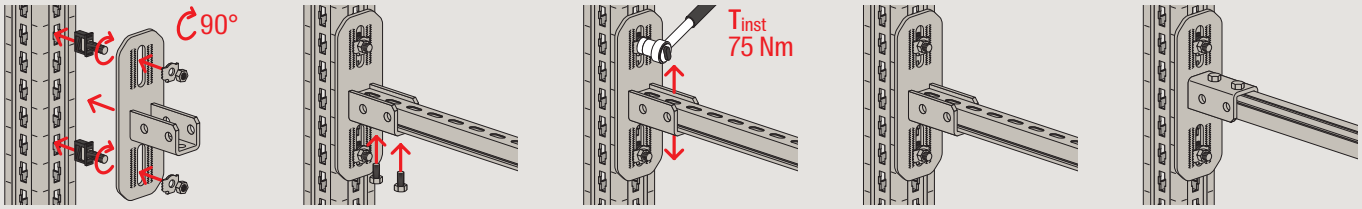

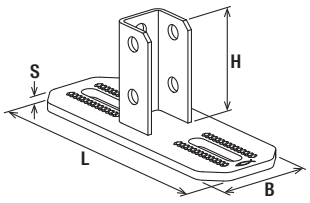


FMA-FUS

## Technical data

| | Item no. | Length L [mm] | Width B [mm] | Height H [mm] | Thickness S [mm] | Sales unit [pcs] |
|---|---|---|---|---|---|---|
| **Item** | | | | | | |
| **FMA-FUS** | **568824** | 250 | 90 | 95 | 8.0 | 6 |

# Connecting element FMUF

Simple bracket connection of FMP massive profiles to each other and to the substrate



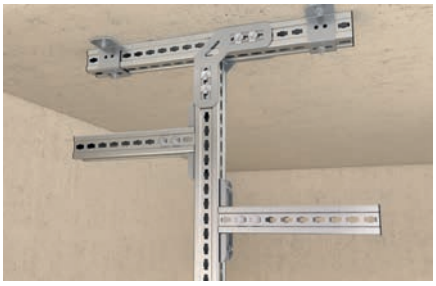

Pendant cantilever fixed to travere profil



## Applications

- Stable construction of connections between channels and building structures for the push-through system.
- Connecting elements for multi-dimensional channel constructions.
- For a secure transverse force connection, 2 M12x130 bolts with M12 nuts can be used alternative, which are pushed through the round openings, whereby each bolt is guided through the adjacent openings.
- For indoor and outdoor application.

## Advantages

- The design of the FMUF connecting element ensures that the FMP massive profiles can be fastened to each other and to the substrate and makes it easy to fasten.
- The version of the FMUF connecting element with slot and grating to accommodate the toothed plate of the FMHB hammer-head push connector allows optimum adjustment of the supported profile for simple and safe installation.

## Properties

- Material: steel S235JR (material no. 1.0038) acc. to DIN EN 10025-2
- Zinc plating: hot-dip galvanised acc. to DIN EN ISO 1461
- Material hexagon nut: steel resistance class 8

## Installation FMUF

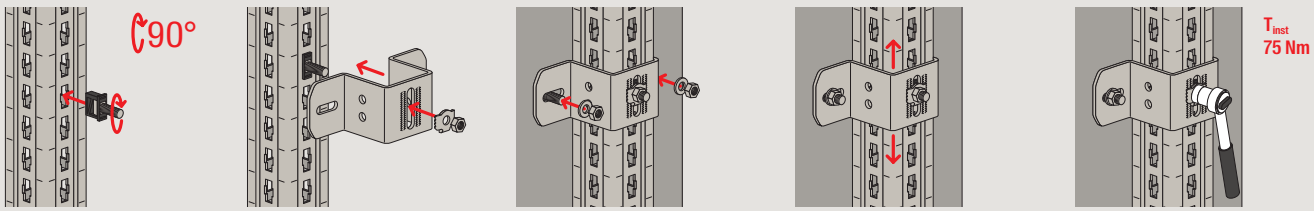

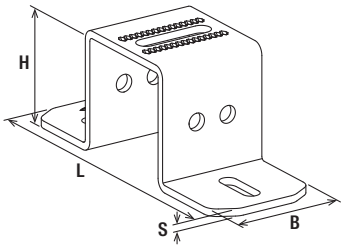


FMUF 90/120

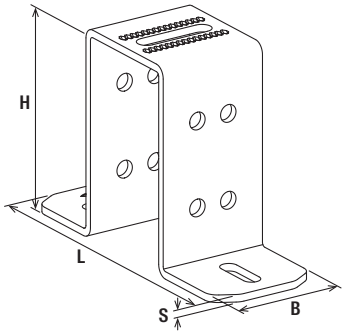


FMUF 160

## Technical data

| Item | Item no. | Length L [mm] | Width B [mm] | Height H [mm] | Thickness S [mm] | Sales unit [pcs] |
|---|---|---|---|---|---|---|
| **FMUF 90** | **547847** | 250 | 90 | 91 | 6.0 | 8 |
| **FMUF 120** | **547848** | 250 | 90 | 121 | 6.0 | 8 |
| **FMUF 160** | **547849** | 250 | 90 | 161 | 6.0 | 8 |

# Fixed point U-bolt FMFS UB

Element for fixing FMPS pipe shoes and FMFS fixed point saddles



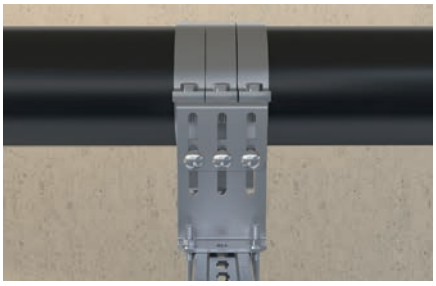

Fix-point construction with saddle



## Applications

- Fixing the fixed point and sliding elements onto the massive profile FMP.
- For indoor and outdoor application.

## Advantages

- The FMFS UB fix point U-bolt is the precisely fitting element for quick and easy fastening of fixed points or sliding elements to the massive profile FMP.
- The FMFS UB fixed point U-bolt is available in 3 sizes and is the perfect fit for fastening for the 3 sizes of massive profiles FMP.

## Properties

- Material: steel S235JR (material no. 1.0038) acc. to DIN EN 10025-2
- Zinc plating: hot-dip galvanised acc. to DIN EN ISO 1461
- Material nut: steel grade 8.8

## Installation FMFS UB

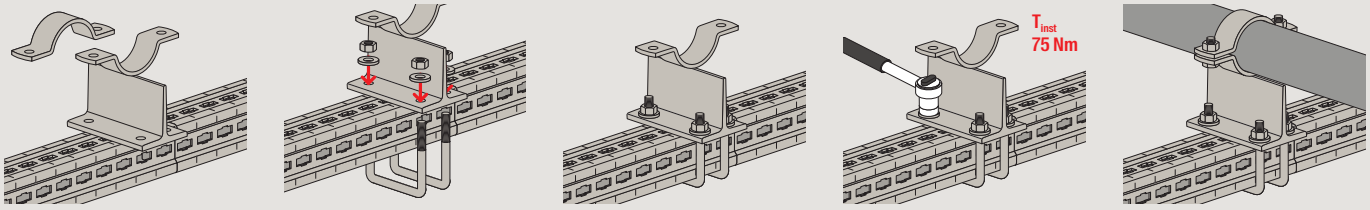

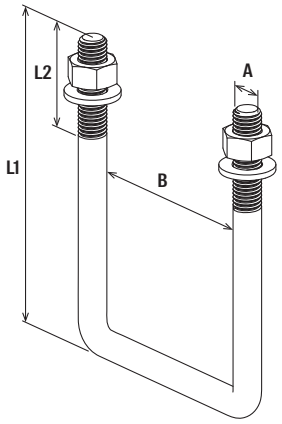


FMFS UB

## Technical data

| Item | Item no. | Thread A | Length $L_1$ [mm] | Length $L_2$ [mm] | Width B [mm] | Sales unit [pcs] |
|---|---|---|---|---|---|---|
| **FMFS UB 90** | **547850** | M12 | 130 | 45 | 91 | 50 |
| **FMFS UB 120** | **547851** | M12 | 160 | 45 | 91 | 40 |
| **FMFS UB 160** | **547852** | M12 | 200 | 45 | 91 | 30 |

# Pipe shoe sliding element FMFS

Element for fixing FMPS pipe shoes in case of thermal expansion



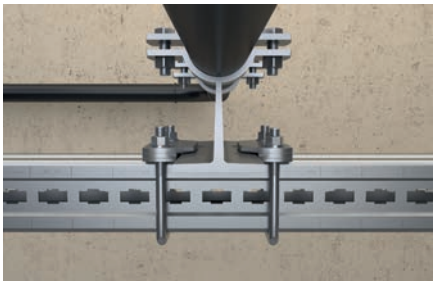

Slide bearing with pipe shoe



Frame construction



## Applications

- Fixation of pipelines for thermal expansions.
- For indoor and outdoor application.

## Advantages

- The sliding element FMFS can be attached to the pipe shoes FMPS to provide axial guidance and lifting for safe guidance in the moment of pipe expansion.
- The sliding element FMFS fits to all base plates of the pipe shoes FMPS due to the variably applicable distance plates and is easy to install.

## Properties

- Material: steel S235JR (material no. 1.0038) acc. to DIN EN 10025-2
- Zinc plating: hot-dip galvanised acc. to DIN EN ISO 1461
- FMFS SP: material plastic inlay: PTFE polytetrafluorethylene, colour white

## Installation FMFS

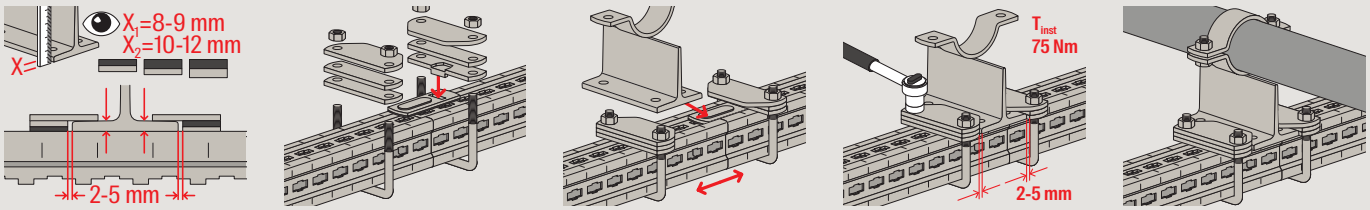

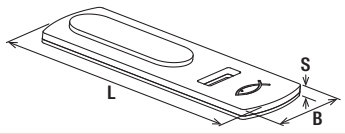


FMFS SP

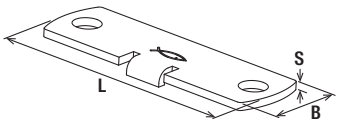


FMFS SH

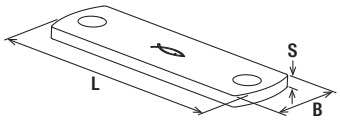


FMFS DP

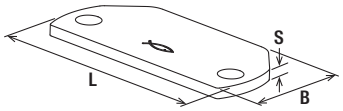


FMFS LL

## Technical data

| Item | Item no. | Length L [mm] | Width B [mm] | Thickness S [mm] | Sales unit [pcs] |
|---|---|---|---|---|---|
| **FMFS SP** | **547853** | 113 | 40 | 4.5 | 10 |
| **FMFS SH** | **547854** | 130 | 35 | 4.0 | 10 |
| **FMFS DP4** | **547855** | 130 | 35 | 4.0 | 20 |
| **FMFS DP6** | **547856** | 130 | 35 | 6.0 | 20 |
| **FMFS LL** | **547857** | 130 | 60 | 6.0 | 20 |

11

## Technical information

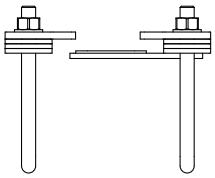

BG 1

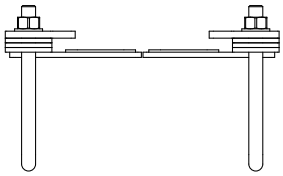

BG 2

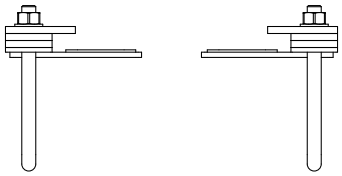

BG 3

| Item | Item No. | Thickness S [mm] | Required number of sliding elements - item per pipe shoe FMPS BG 1 X 1 = 8 - 9 mm [pcs] | BG 2 X 1 = 8 - 9 mm [pcs] | BG 3 X 2 = 10 - 12 mm [pcs] |
|---|---|---|---|---|---|
| **FMFS SP** | **547853** | 4,5 | 1 | 2 | 2 |
| **FMFS SH** | **547854** | 4 | 1 | 2 | 2 |
| **FMFS DP4** | **547855** | 4 | 5 | 4 | - |
| **FMFS DP6** | **547856** | 6 | - | - | 4 |
| **FMFS LL** | **547857** | 6 | 2 | 2 | 2 |

In addition, 2 FMFS UB fixed point brackets are required in each case - size matching the FMP profile.
The kind of assembly group is listed in the tables for the pipe shoes FMPS, see pages FMPS.

# Fixed point FMFS S and M

Supporting element for fixing in case of thermal expansion



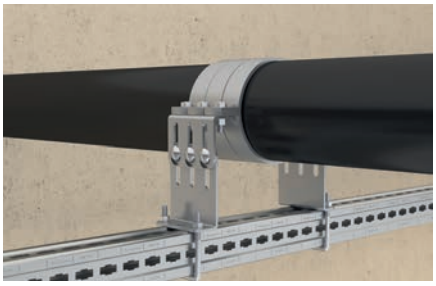

Fixed point construction to profile



## Applications

- Fixation of pipelines for thermal expansions.
- To use with the pipe clamp FMFSC as fixed point. Up to 3 pipe clamps in row possible.
- For indoor and outdoor application.

## Advantages

- The modular design of the fixed point saddle in 2 heights allows for optimum adaptation to the load level and pipe dimensions.
- The fixed point saddle allows for good and simple height and inclination adjustment due to the slotted hole connections.

## Properties

- Material: steel S235JR (material no. 1.0038) acc. to DIN EN 10025-2
- Material hexagon nut: steel resistance class 8
- Zinc plating: hot-dip galvanised acc. to DIN EN ISO 1461
- Material screw: steel grade 8.8

## Installation FMFS

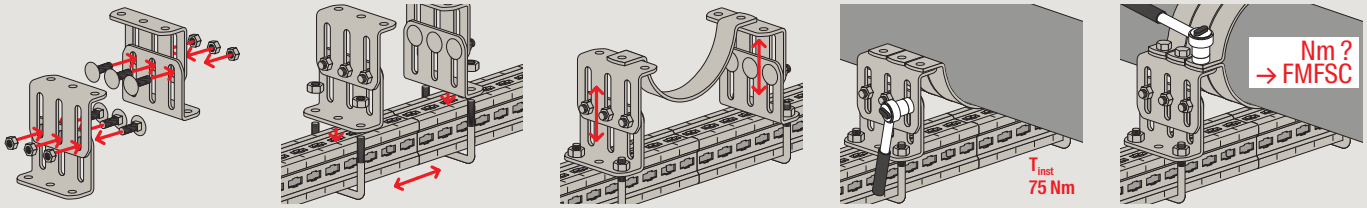

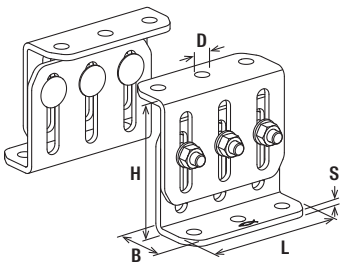


FMFS

## Technical data

| Item | Item no. | Use with FMFSC pipe clamps | Length L [mm] | Width B [mm] | Total height H [mm] | Hole-Ø D [mm] | Thickness S [mm] | Sales unit [pcs] |
|---|---|---|---|---|---|---|---|---|
| **FMFS S** | **547860** | < DN 80 | 140 | 54 | 115 - 175 | 14 | 6.0 | 2 |
| **FMFS M** | **547861** | > DN 100 | 140 | 54 | 175 - 240 | 17 | 6.0 | 2 |

# Pipe shoes FMPS

Prefabricated elements for fixing of pipes and massive profiles FMP





Frame construction



## Applications

- Fixing of heavy duty pipelines up to DN 600
- Can be used as sliding point.
- Can be used as fixed point.
- For indoor and outdoor application.

## Advantages

- The designs of the pipe shoes with one or two pipe clamps in standard and solid version allow for fixing of heavy duty pipes.
- Due to the additional perforation, the pipe shoes FMPS can be used as fixed points to attach with the FMFS UB fixed point U-bolt to the FMP massive profile.
- The pipe shoes FMPS can be used as sliding elements by attaching the pipe shoes-sliding bearing to the FMP massive profile.

## Properties

- Material: steel S235JR (material no. 1.0038) acc. to DIN EN 10025-2
- Zinc plating: hot-dip galvanised acc. to DIN EN ISO 1461
- Material screw: steel grade 8.8
- Material hexagon nut: steel resistance class 8

## Installation FMPS

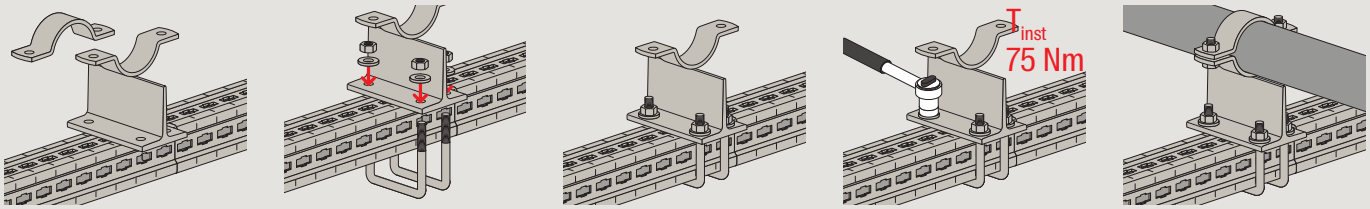

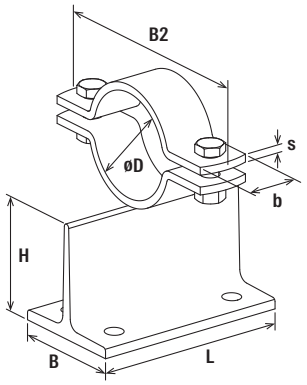


FMPS 1/1

## Technical data

| Item | Item no. | Size [in] | Clamping range D [mm] | Length L [mm] | Width B [mm] | Width B2 [mm] | Height H [mm] | Width x thickness clamp band b x s [mm] | Locking screw | Sales unit [pcs] |
|---|---|---|---|---|---|---|---|---|---|---|
| **FMPS 25 1/1-80** | **547862**[1)] | 1 | 34 | 150 | 90 | 102 | 87.5 | 30 x 5 | M10 | 1 |
| **FMPS 40 1/1-80** | **547863**[1)] | 1 1/2 | 49 | 150 | 90 | 118 | 87.5 | 30 x 5 | M10 | 1 |
| **FMPS 50 1/1-80** | **547864**[1)] | 2 | 61 | 150 | 90 | 144 | 87.5 | 40 x 6 | M12 | 1 |
| **FMPS 65 1/1-80** | **547865**[1)] | 2 1/2 | 77 | 150 | 90 | 158 | 87.5 | 40 x 6 | M12 | 1 |
| **FMPS 80 1/1-80** | **547866**[1)] | 3 | 89 | 150 | 90 | 172 | 87.5 | 40 x 6 | M12 | 1 |
| **FMPS 25 1/1-150** | **548410**[1)] | 1 | 34 | 150 | 150 | 150 | 150 | 30 x 5 | M10 | 1 |
| **FMPS 40 1/1-150** | **547867**[1)] | 1 1/2 | 49 | 150 | 150 | 102 | 150 | 30 x 5 | M10 | 1 |
| **FMPS 50 1/1-150** | **547868**[1)] | 2 | 61 | 150 | 150 | 118 | 150 | 30 x 5 | M12 | 1 |
| **FMPS 65 1/1-150** | **547869**[1)] | 2 1/2 | 77 | 150 | 150 | 144 | 150 | 40 x 6 | M12 | 1 |
| **FMPS 80 1/1-150** | **547870**[1)] | 3 | 89 | 150 | 150 | 158 | 150 | 40 x 6 | M12 | 1 |
| **FMPS 100 1/1-150** | **547871**[1)] | 3 | 89 | 150 | 150 | 172 | 150 | 40 x 6 | M12 | 1 |
| **FMPS 125 1/1-150** | **547872**[1)] | 4 | 115 | 150 | 150 | 220 | 150 | 50 x 8 | M16 | 1 |
| **FMPS 150 1/1-150** | **547873**[1)] | 6 | 169 | 150 | 150 | 280 | 150 | 50 x 8 | M16 | 1 |
| **FMPS 200 1/1-150** | **547874**[1)] | 8 | 220 | 150 | 150 | 332 | 150 | 50 x 8 | M16 | 1 |

[1)] Delivery time on request.

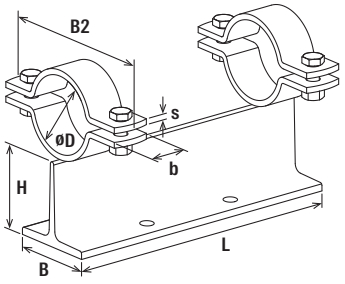


FMPS 1/2

## Technical data

| Item | Item no. | Size [in] | Clamping range D [mm] | Length L [mm] | Width B [mm] | Width B2 [mm] | Height H [mm] | Width x thickness clamp band b x s [mm] | Locking screw | Sales unit [pcs] |
|---|---|---|---|---|---|---|---|---|---|---|
| **FMPS 25 1/2-80** | **547875**[1)] | 1 | 34 | 300 | 90 | 102 | 87.5 | 30 x 5 | M10 | 1 |
| **FMPS 40 1/2-80** | **547877**[1)] | 1 1/2 | 49 | 300 | 90 | 118 | 87.5 | 30 x 5 | M10 | 1 |
| **FMPS 50 1/2-80** | **547879**[1)] | 2 | 61 | 300 | 90 | 144 | 87.5 | 40 x 6 | M12 | 1 |
| **FMPS 65 1/2-80** | **547881**[1)] | 2 1/2 | 77 | 300 | 90 | 158 | 87.5 | 40 x 6 | M12 | 1 |

[1)] Delivery time on request.

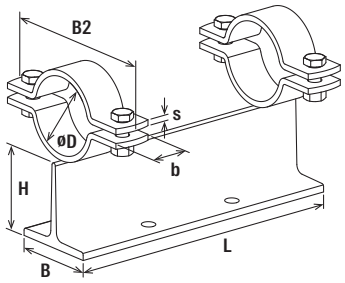


FMPS 1/2

## Technical data

| Item | Item no. | Size [in] | Clamping range D [mm] | Length L [mm] | Width B [mm] | Width B2 [mm] | Height H [mm] | Width x thickness clamp band b x s [mm] | Locking screw | Sales unit [pcs] |
|---|---|---|---|---|---|---|---|---|---|---|
| FMPS 80 1/2-80 | 547883[1)] | 3 | 89 | 300 | 90 | 172 | 87.5 | 40 x 6 | M12 | 1 |
| FMPS 100 1/2-110 | 547885 | 4 | 115 | 300 | 125 | 220 | 125 | 50 x 8 | M16 | 1 |
| FMPS 125 1/2-110 | 547887 | 5 | 140 | 300 | 125 | 252 | 125 | 50 x 8 | M16 | 1 |
| FMPS 150 1/2-110 | 547889 | 6 | 169 | 300 | 125 | 280 | 125 | 50 x 8 | M16 | 1 |
| FMPS 200 1/2-110 | 547891 | 8 | 220 | 300 | 125 | 332 | 125 | 50 x 8 | M16 | 1 |
| FMPS 25 1/2-150 | 547876[1)] | 1 | 34 | 300 | 150 | 102 | 150 | 30 x 5 | M10 | 1 |
| FMPS 40 1/2-150 | 547878[1)] | 1 1/2 | 49 | 300 | 150 | 118 | 150 | 30 x 5 | M10 | 1 |
| FMPS 50 1/2-150 | 547880[1)] | 2 | 61 | 300 | 150 | 144 | 150 | 40 x 6 | M12 | 1 |
| FMPS 65 1/2-150 | 547882[1)] | 2 1/2 | 77 | 300 | 150 | 158 | 150 | 40 x 6 | M12 | 1 |
| FMPS 80 1/2-150 | 547884[1)] | 3 | 89 | 300 | 150 | 172 | 150 | 40 x 6 | M12 | 1 |
| FMPS 100 1/2-150 | 547886[1)] | 4 | 115 | 300 | 150 | 220 | 150 | 50 x 8 | M16 | 1 |
| FMPS 125 1/2-150 | 547888[1)] | 5 | 140 | 300 | 150 | 252 | 150 | 50 x 8 | M16 | 1 |
| FMPS 150 1/2-150 | 547890[1)] | 6 | 169 | 300 | 150 | 280 | 150 | 50 x 8 | M16 | 1 |
| FMPS 200 1/2-150 | 547892 | 8 | 220 | 300 | 150 | 332 | 150 | 50 x 8 | M16 | 1 |

[1)] Delivery time on request.

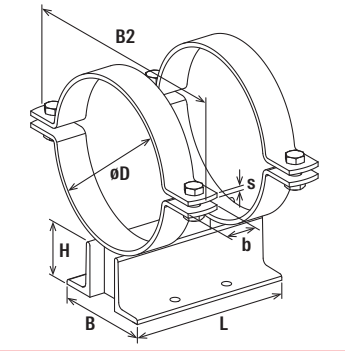


FMPS 2/2

## Technical data

| Item | Item no. | Size [in] | Clamping range D [mm] | Length L [mm] | Width B [mm] | Width B2 [mm] | Height H [mm] | Width x thickness clamp band b x s [mm] | Locking screw | Sales unit [pcs] |
|---|---|---|---|---|---|---|---|---|---|---|
| FMPS 250 2/2-110 | 547893 | 10 | 273 | 300 | 200 | 396 | 100 | 50 x 8 | M16 | 1 |
| FMPS 300 2/2-110 | 547894 | 12 | 324 | 300 | 200 | 458 | 100 | 60 x 8 | M20 | 1 |
| FMPS 350 2/2-110 | 547895 | 14 | 356 | 300 | 200 | 504 | 100 | 60 x 8 | M20 | 1 |
| FMPS 400 2/2-110 | 547896 | 16 | 407 | 300 | 200 | 582 | 100 | 70 x 10 | M24 | 1 |
| FMPS 500 2/2-110 | 547897 | 20 | 508 | 300 | 250 | 672 | 100 | 70 x 10 | M24 | 1 |

[1)] Delivery time on request.

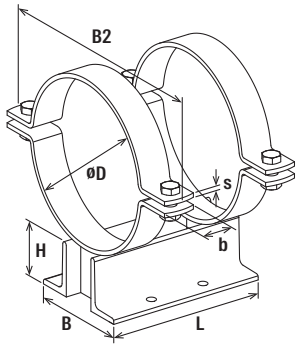


FMPS 2/2

## Technical data

| Item | Item no. | Size [in] | Clamping range D [mm] | Length L [mm] | Width B [mm] | Width B2 [mm] | Height H [mm] | Width x thickness clamp band b x s [mm] | Locking screw | Sales unit [pcs] |
|---|---|---|---|---|---|---|---|---|---|---|
| **FMPS 600 2/2-110** | **547898** | 24 | 610 | 300 | 250 | 814 | 100 | 90 x 15 | M30 | 1 |
| **FMPS 250 2/2-150** | **547899**[1)] | 10 | 273 | 300 | 200 | 814 | 140 | 90 x 15 | M16 | 1 |
| **FMPS 300 2/2-150** | **547900**[1)] | 12 | 324 | 300 | 200 | 396 | 140 | 60 x 8 | M20 | 1 |
| **FMPS 350 2/2-150** | **547901**[1)] | 14 | 356 | 300 | 200 | 458 | 140 | 60 x 8 | M20 | 1 |
| **FMPS 400 2/2-150** | **547902**[1)] | 16 | 407 | 300 | 200 | 504 | 140 | 70 x 10 | M24 | 1 |
| **FMPS 500 2/2-150** | **547903**[1)] | 20 | 508 | 300 | 250 | 582 | 140 | 70 x 10 | M24 | 1 |
| **FMPS 600 2/2-150** | **547904**[1)] | 24 | 610 | 300 | 250 | 672 | 140 | 90 x 15 | M30 | 1 |

[1)] Delivery time on request.

# Massive pipe clamp FMFSC

Element for stable fixing of pipes and massive profiles FMP



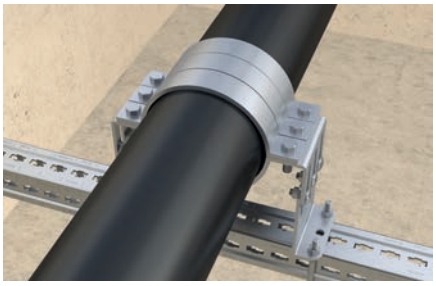

Fixed point clamp construction



## Applications

- Fixing of heavy duty pipelines up to DN 250.
- Can be used as a fixed point in combination with the FMFS saddle.
- For indoor and outdoor application.

## Advantages

- The fischer massive pipe clamps FMFSC without rubber insert for fixing pipelines up to DN 250 can reliably fix heavy duty pipelines and can be used in many applications.

## Properties

- Material: steel S235JR (material no. 1.0038) acc. to DIN EN 10025-2
- Zinc plating: hot-dip galvanised acc. to DIN EN ISO 1461
- Material screw: steel grade 8.8
- Material hexagon nut: steel resistance class 8

## Installation FMFSC

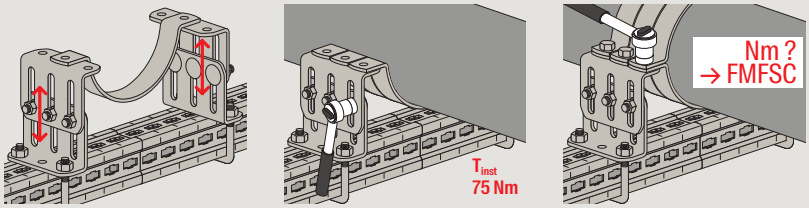

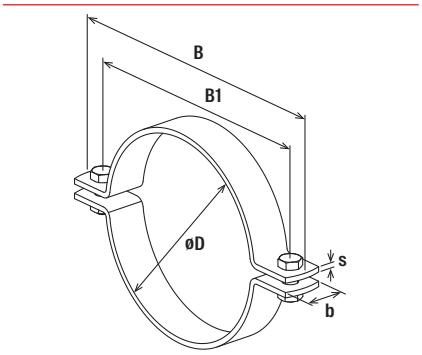


FMFSC

## Technical data

| Item | Item no. | Size [in] | Clamping range D [mm] | Width B [mm] | Width B1 [mm] | Width x thickness clamp band b x s [mm] | Locking screw | Installation torque $T_{inst}$ [Nm] | Sales unit [pcs] |
|---|---|---|---|---|---|---|---|---|---|
| **FMFSC 25** | **547905** | 1 | 34 | 102 | 72 | 30 x 5 | M10 | 30 | 1 |
| **FMFSC 32** | **547906** | 1 1/4 | 43 | 112 | 82 | 30 x 5 | M10 | 30 | 1 |
| **FMFSC 40** | **547907** | 1 1/2 | 49 | 118 | 88 | 30 x 5 | M10 | 30 | 1 |
| **FMFSC 50** | **547909** | 2 | 61 | 144 | 108 | 40 x 6 | M12 | 50 | 1 |
| **FMFSC 65** | **547910** | 2 1/2 | 77 | 158 | 122 | 40 x 6 | M12 | 50 | 1 |
| **FMFSC 80** | **547911** | 3 | 89 | 172 | 136 | 40 x 6 | M12 | 50 | 1 |
| **FMFSC 100** | **547913** | 4 | 115 | 220 | 172 | 50 x 8 | M16 | 100 | 1 |
| **FMFSC 125** | **547915** | 5 | 140 | 252 | 204 | 50 x 8 | M16 | 100 | 1 |
| **FMFSC 150** | **547918** | 6 | 169 | 280 | 232 | 50 x 8 | M16 | 100 | 1 |
| **FMFSC 200** | **547919** | 8 | 220 | 332 | 284 | 50 x 8 | M16 | 100 | 1 |
| **FMFSC 250/50** | **547921** | 10 | 273 | 396 | 348 | 50 x 8 | M16 | 100 | 1 |

# Massive U-bolt FMPSU

Simple element for fixing of pipes and massive profile FMP



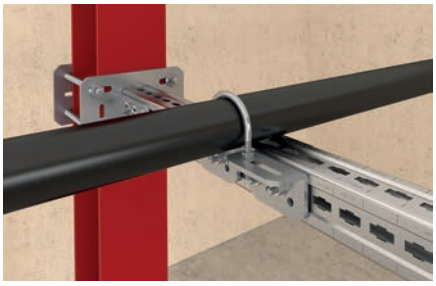

Profile traverse to steel structure



## Applications

- Fixing of heavy duty pipelines up to DN 250.
- For indoor and outdoor application.

## Advantages

- The FMPSU massive U-bolt for fixing heavy duty pipelines directly onto the FMP massive profile is the simplest type of connection for heavy duty pipelines.

## Properties

- Material: steel S235JR (material no. 1.0038) acc. to DIN EN 10025-2
- Zinc plating: hot-dip galvanised
- Material screw: steel grade 8.8
- Material hexagon nut: steel resistance class 8

## Installation FMPSU

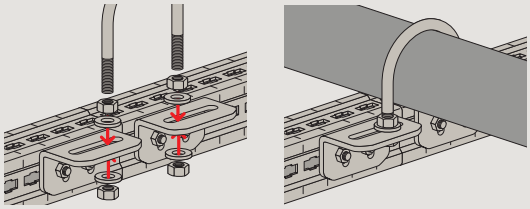

**See also:**

Product family Connecting element FMCE-L Page 3932



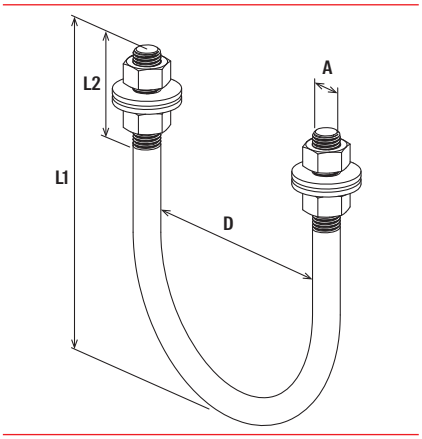


FMPSU

## Technical data

| Item | Item no. | Size [in] | Clamping range D [mm] | Length $L_1$ [mm] | Length $L_2$ [mm] | Thread A | Sales unit [pcs] |
|---|---|---|---|---|---|---|---|
| **FMPSU 25** | **547929** | 1 | 38 | 70 | 40 | M10 | 50 |
| **FMPSU 32** | **547930** | 1 1/4 | 46 | 76 | 50 | M10 | 50 |
| **FMPSU 40** | **547931** | 1 1/2 | 52 | 86 | 50 | M10 | 50 |
| **FMPSU 50** | **547933** | 2 | 64 | 109 | 50 | M12 | 50 |
| **FMPSU 65** | **547934** | 2 1/2 | 82 | 125 | 50 | M12 | 50 |
| **FMPSU 80** | **547935** | 3 | 94 | 138 | 50 | M12 | 50 |
| **FMPSU 100** | **547937** | 4 | 120 | 171 | 60 | M16 | 25 |
| **FMPSU 125** | **547939** | 5 | 148 | 191 | 60 | M16 | 20 |
| **FMPSU 150** | **547941** | 6 | 176 | 217 | 60 | M16 | 15 |
| **FMPSU 200** | **547942** | 8 | 228 | 283 | 70 | M20 | 8 |
| **FMPSU 250** | **547943** | 10 | 282 | 334 | 70 | M20 | 8 |



# 12

# Installation system stainless steel


| | | |
|---|---|---|
| Pipe clamp FRS A2/A4 | 434 |  |
| Heavy duty pipe clamp FRSM A4 - metric | 436 |  |
| Channel FUS A2/A4 | 438 |  |
| Cover cap FEC | 441 |  |
| Channel connector PFUF OC A4 | 442 |  |
| Socket wrench FSK | 443 |  |
| Cantilever arm FCA A4 | 444 |  |
| Channel connector FDCC A4 | 445 |  |
| Push-through connector PFCN A4 | 447 |  |
| Saddle flange PSF A4 | 449 |  |
| Universal bracket PUWS A4 | 450 |  |
| Angle bracket PWK A4 | 452 |  |
| Variable bracket PVB A4 | 453 |  |
| Bracing elements PSAE A4 | 454 |  |
| Bracket PFFF A4 | 456 |  |
| Bracket PFAF A4 | 457 |  |
| Bracket PFUF A4 | 459 |  |
| Bracket PFUF D A4 | 460 |  |

| | | |
|---|---|---|
| Channel nut FCN Clix P A4 | 462 |  |
| Channel nut FCN Clix M A4 | 464 |  |
| Channel nut FCN A4 | 466 |  |
| Saddle flange SF L 41 A4 | 468 |  |
| Bracket FAF A4 | 469 |  |
| Variable bracket VB A4 | 470 |  |
| Channel washer HK 41 A4 | 471 | 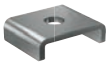 |
| Beam clamp TKR A4 | 472 |  |
| Beam clamp TKL A4 | 474 |  |
| Beam clamp TKLS A4 | 475 |  |
| Threaded rod G A2/A4 | 476 |  |
| Threaded stud GS A4 | 477 |  |
| Hexagonal screw SKS A4 | 478 |  |
| Washer U A4 | 479 |  |
| Hexagonal nut MU A4 | 480 |  |
| Hexagonal connector VM A4 | 481 |  |
| Stud screw STS A2/A4 | 482 |  |

# Pipe clamp FRS A2/A4

The two-screw pipe clamp with simple connecting thread





Pipe assembly

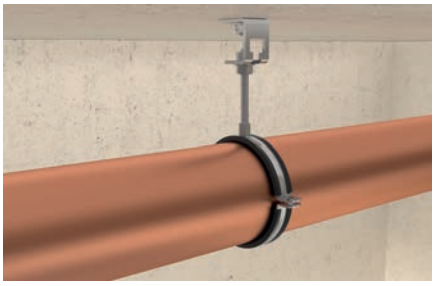

Height adjustable pipe installation

12

## Applications

- Secure fixing for pipes with threaded rods or stud screws.
- For indoor and outdoor applications and in environments with high stress to components due to corrosion.
- FRS A2: not suitable for use in environments containing chlorine.

## Advantages

- The fire test report guarantees independently tested functional safety.
- The two screws allow an easy adjustment to suit the outer pipe diameter.
- The combination connecting nut with thread M8/M10 enables optimised mounting choices.
- The sound insulation insert offers noise protection and prevents contact corrosion.
- The screw‘s safety feature ensures trouble-free installation.

## Properties

- Material: stainless steel A2 (material no 1.4301)
- Material: stainless steel A4 (material no 1.4401)
- Material sound insulation insert: EPDM; chlorine-free; silicone-free
- Temperature range: -40 °C to +100 °C
- Hardness: 55 ± 5° Shore A
- Fire behaviour: DIN 4102: Class B2

## Installation FRS

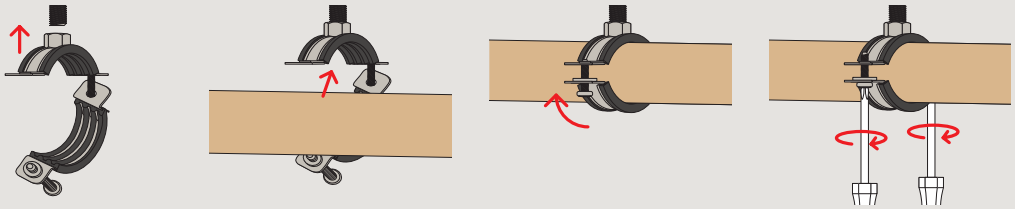

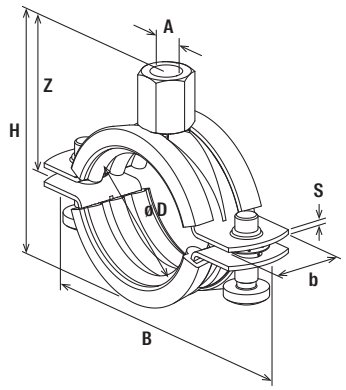


FRS

## Technical data

| Item | Item no. | Thread A | Size [in] | Clamping range D [mm] | Width B [mm] | Height H [mm] | Height Z [mm] | Width x thickness clamp band b x s [mm] | Locking screw | Installation torque $T_{inst}$ [Nm] | Max. re-com. static load (centr. tension) $N_{rec}$ [kN] | Sales unit [pcs] |
|---|---|---|---|---|---|---|---|---|---|---|---|---|
| **FRS 3/8“ A2** | **560576** | M8 | 3/8 | 15 - 19 | 62 | 40 | 23 | 20 x 1.2 | M6 | 2 | 1.00 | 25 |
| **FRS 1/2“ A2** | **560577** | M8 | 1/2 | 20 - 24 | 68 | 45 | 26 | 20 x 1.2 | M6 | 2 | 1.00 | 25 |
| **FRS 3/4“ A2** | **560578** | M8 | 3/4 | 26 - 30 | 75 | 52 | 29 | 20 x 1.2 | M6 | 2 | 1.00 | 25 |
| **FRS 1“ A2** | **560579** | M8 | 1 | 31 - 38 | 80 | 60 | 32 | 20 x 1.2 | M6 | 2 | 1.00 | 25 |
| **FRS 1 1/4“ A2** | **560580** | M8 | 1 1/4 | 40 - 46 | 90 | 67 | 37 | 20 x 1.2 | M6 | 2 | 1.00 | 25 |
| **FRS 1 1/2“ A2** | **560581** | M8 | 1 1/2 | 48 - 54 | 97 | 75 | 41 | 20 x 1.2 | M6 | 2 | 1.00 | 25 |
| **FRS 2“ A2** | **560583** | M8 | 2 | 60 - 64 | 110 | 85 | 46 | 20 x 1.2 | M6 | 2 | 1.00 | 10 |
| **FRS 2 1/2“ A2** | **560585** | M10 | 2 1/2 | 72 - 78 | 130 | 99 | 53 | 25 x 1.5 | M6 | 2 | 1.30 | 10 |
| **FRS 3“ A2** | **560587** | M10 | 3 | 87 - 92 | 144 | 113 | 60 | 25 x 1.5 | M6 | 2 | 1.30 | 10 |
| **FRS 4“ A2** | **560589** | M10 | 4 | 102 - 116 | 172 | 138 | 73 | 25 x 2.0 | M6 | 2 | 2.00 | 10 |
| **FRS 54 - 59 A2** | **560582** | M8 | 1 1/2 | 54 - 59 | 104 | 80 | 44 | 20 x 1.2 | M6 | 2 | 1.00 | 25 |
| **FRS 67 - 71 A2** | **560584** | M8 | – | 67 - 71 | 119 | 92 | 49 | 20 x 1.2 | M6 | 2 | 1.00 | 10 |
| **FRS 81 - 86 A2** | **560586** | M10 | – | 81 - 86 | 132 | 107 | 58 | 25 x 1.5 | M6 | 2 | 1.30 | 10 |
| **FRS 95 - 103 A2** | **560588** | M10 | – | 95 - 103 | 156 | 124 | 66 | 25 x 1.5 | M6 | 2 | 1.30 | 10 |
| **FRS 121 - 127 A2** | **560590** | M10 | – | 121 - 127 | 192 | 149 | 79 | 25 x 2.0 | M8 | 3 | 2.00 | 5 |
| **FRS 133 - 141 A2** | **560591** | M10 | 5 | 133 - 141 | 198 | 163 | 86 | 25 x 2.0 | M8 | 3 | 2.00 | 5 |
| **FRS 159 - 168 A2** | **560592** | M10 | 6 | 159 - 168 | 218 | 191 | 100 | 25 x 2.0 | M8 | 3 | 2.00 | 5 |
| **FRS 3/8“ A4** | **560593** | M8 | 3/8 | 15 - 19 | 62 | 40 | 23 | 20 x 1.2 | M6 | 2 | 1.00 | 25 |
| **FRS 1/2“ A4** | **560594** | M8 | 1/2 | 20 - 24 | 68 | 45 | 26 | 20 x 1.2 | M6 | 2 | 1.00 | 25 |
| **FRS 3/4“ A4** | **560595** | M8 | 3/4 | 25 - 30 | 75 | 52 | 29 | 20 x 1.2 | M6 | 2 | 1.00 | 25 |
| **FRS 1“ A4** | **560596** | M8 | 1 | 31 - 38 | 80 | 60 | 32 | 20 x 1.2 | M6 | 2 | 1.00 | 25 |
| **FRS 1 1/4“ A4** | **560597** | M8 | 1 1/4 | 40 - 46 | 90 | 67 | 37 | 20 x 1.2 | M6 | 2 | 1.00 | 25 |
| **FRS 1 1/2“ A4** | **560598** | M8 | 1 1/2 | 48 - 54 | 97 | 75 | 41 | 20 x 1.2 | M6 | 2 | 1.00 | 25 |
| **FRS 2“ A4** | **560600** | M8 | 2 | 60 - 64 | 110 | 85 | 46 | 20 x 1.2 | M6 | 2 | 1.00 | 10 |
| **FRS 2 1/2“ A4** | **560602** | M10 | 2 1/2 | 72 - 78 | 130 | 99 | 53 | 25 x 1.5 | M6 | 2 | 1.30 | 10 |
| **FRS 3“ A4** | **560604** | M10 | 3 | 87 - 92 | 144 | 113 | 60 | 25 x 1.5 | M6 | 2 | 1.30 | 10 |
| **FRS 4“ A4** | **560606** | M10 | 4 | 102 - 116 | 172 | 138 | 73 | 25 x 2.0 | M6 | 2 | 2.00 | 10 |
| **FRS 54 - 58 A4** | **560599** | M8 | 1 1/2 | 54 - 59 | 104 | 80 | 44 | 20 x 1.2 | M6 | 2 | 1.00 | 25 |
| **FRS 67 - 71 A4** | **560601** | M8 | – | 67 - 71 | 119 | 92 | 49 | 20 x 1.2 | M6 | 2 | 1.00 | 10 |
| **FRS 81 - 86 A4** | **560603** | M10 | – | 81 - 86 | 132 | 107 | 58 | 25 x 1.5 | M6 | 2 | 1.30 | 10 |
| **FRS 95 - 103 A4** | **560605** | M10 | – | 95 - 103 | 156 | 124 | 66 | 25 x 1.5 | M6 | 2 | 1.30 | 10 |
| **FRS 121 - 127 A4** | **560607** | M10 | – | 121 - 127 | 192 | 149 | 79 | 25 x 2.0 | M6 | 2 | 2.00 | 5 |
| **FRS 133 - 141 A4** | **560608** | M10 | 5 | 133 - 141 | 198 | 163 | 86 | 25 x 2.0 | M6 | 2 | 2.00 | 5 |
| **FRS 159 - 168 A4** | **560609** | M10 | 6 | 159 - 168 | 218 | 191 | 100 | 25 x 2.0 | M6 | 2 | 2.00 | 5 |

# Heavy duty pipe clamp FRSM A4- metric

The large pipe clamp with sound insulation insert for medium to heavy loads





Heavy pipe on cantilever

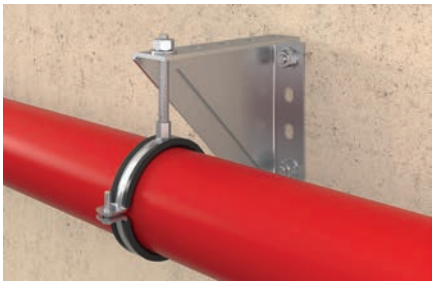

Heavy drainage pipe under angle bracket

12

## Applications

- Fixing of medium to heavy pipes with threaded rods (hanger bolts).
- For indoor and outdoor applications and in environments with high stress to components due to corrosion.

## Advantages

- High tested loads guarantee save functioning of the FRSM.
- From Ø 124 mm it is possible to install with 2 threaded rods, e.g. for the fixing of cast iron roof drainage pipes.
- The two screws allow for easy adjustment to suit the outer pipe diameter.
- The screw‘s safety features ensures trouble-free installation.

## Properties

- Material: stainless steel A4 (material no. 1.4401)
- Connecting nut: M12 SW19, M16 SW24
- Locking screw: hexagon screw with nut
- Material sound insulation insert: EPDM; chlorine-free; silicone-free
- Temperature range: -50°C to +110°C
- Hardness: 45 ± 5° Shore A
- Fire behaviour: DIN 4102: Class B2

## Installation FRSM

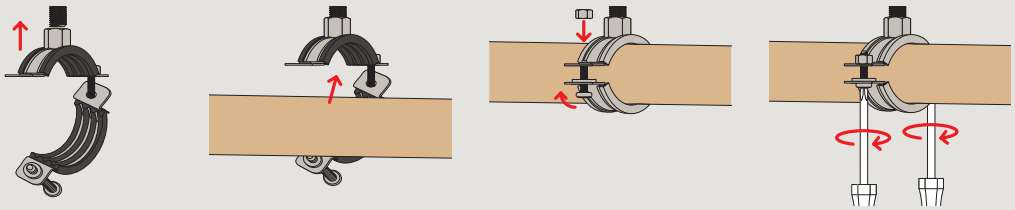

## Installation of FRSM with two threaded rods

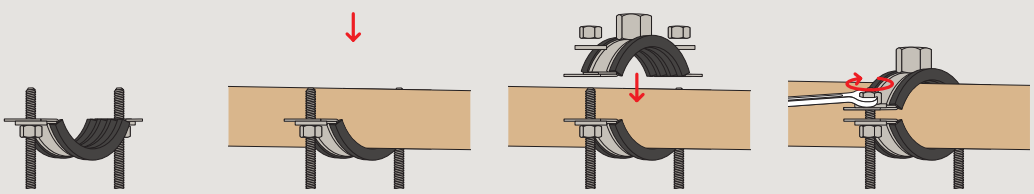

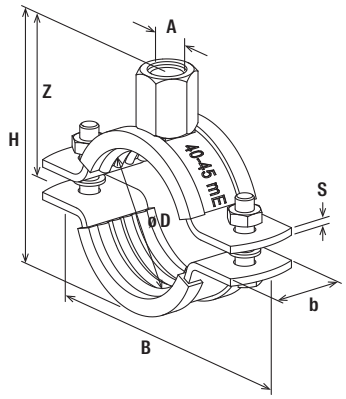


FRSM - metric

## Technical data

| Item | Item no. | Thread A | Size [in] | Clamping range D [mm] | Width B [mm] | Height H [mm] | Height Z [mm] | Width x thickness clamp band b x s [mm] | Locking screw | Installation torque $T_{inst}$ [Nm] | Max. re-com. static load (centr. tension) $N_{rec}$ [kN] | Sales unit [pcs] |
|---|---|---|---|---|---|---|---|---|---|---|---|---|
| **FRSM 165-171 M12 A4** | **562764** | M12 | 6 | 165 - 171 | 232 | 206 | 113 | 30 x 3.0 | M8 | 3 | 3.00 | 10 |
| **FRSM 188-194 M12 A4** | **562765** | M12 | 7 | 188 - 194 | 255 | 229 | 125 | 30 x 3.0 | M8 | 3 | 3.00 | 10 |
| **FRSM 196-203 M12 A4** | **562766** | M12 | – | 196 - 203 | 263 | 238 | 129 | 30 x 3.0 | M8 | 3 | 3.00 | 10 |
| **FRSM 212 M16 A4** | **562767** | M16 | – | 205 - 214 | 297 | 264 | 147 | 40 x 4.0 | M12 | 10 | 5.00 | 10 |
| **FRSM 8“ M16 A4** | **562768** | M16 | 8 | 219 - 225 | 308 | 275 | 153 | 40 x 4.0 | M12 | 10 | 5.00 | 10 |
| **FRSM 250 M16 A4** | **562769** | M16 | – | 244 - 250 | 333 | 300 | 165 | 40 x 4.0 | M12 | 10 | 5.00 | 5 |
| **FRSM 10“ M16 A4** | **562770** | M16 | 10 | 267 - 273 | 356 | 323 | 177 | 40 x 4.0 | M12 | 10 | 5.00 | 5 |
| **FRSM 300 M16 A4** | **562771** | M16 | – | 297 - 304 | 387 | 354 | 192 | 40 x 4.0 | M12 | 10 | 5.00 | 5 |
| **FRSM 305-316 M16 A4** | **562772** | M16 | – | 305 - 316 | 397 | 366 | 198 | 40 x 4.0 | M12 | 10 | 5.00 | 5 |
| **FRSM 12“ M16 A4** | **562773** | M16 | 12 | 320 - 328 | 411 | 378 | 204 | 40 x 4.0 | M12 | 10 | 5.00 | 5 |

# Channel FUS A2/A4

The universal and complete mounting channel system for a wide range of applications





3D-frame constructions



Solid frame construction



## Applications

- Secure horizontal and vertical installations.
- Fast and efficient fixing of pipelines and supporting structures.
- For indoor and outdoor application and in environments with high stress to components due to corrosion.
- FUS A2: Not suitable for use in environments containing chlorine.

## Certificates

R 120

R 30 MLAR

## Advantages

- The fire inspection report in line with MLAR/EN13501 guarantees independently tested functional safety.
- The basic channel geometry allows the usage of the complete extensive range of accessories.
- The stamped serration in the channel give the sliding nuts a secure hold for high shear loads, e.g. for vertical installation.
- Different channel wall thicknesses allow economical choices for installation.
- The scale on the mounting channels simplifies the cutting and positioning of the fixtures during the installation.

## Properties

- Material: stainless steel A2 (material no. 1.4301)
- Material: stainless steel A4 (material no. 1.4404)

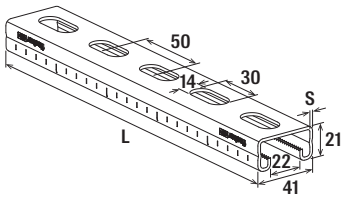


FUS 21

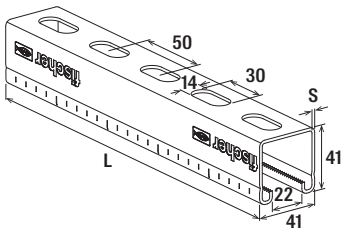


FUS 41

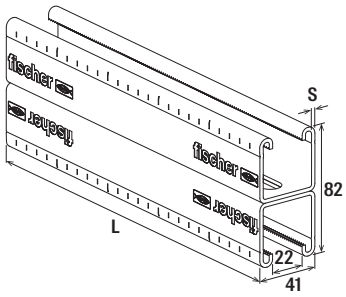


FUS 41D

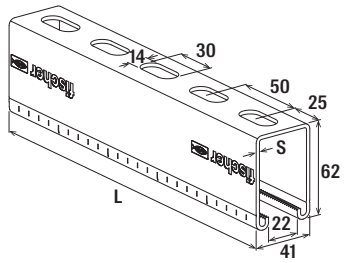


FUS 62

12

## Technical data

| Item | Item no. | Fire test report | Length L [mm] | Thickness S [mm] | Sales unit [pcs] |
|---|---|---|---|---|---|
| **FUS 21/2,0 A2 - 2 m** | **504466** | – | 2,000 | 2.0 | 1 |
| **FUS 21/2,0 A2 - 6 m** | **542735**[1)] | – | 6,000 | 2.0 | 1 |
| **FUS 41/2,0 A2 - 2 m** | **504468** | – | 2,000 | 2.0 | 1 |
| **FUS 41/2,0 A2 - 6 m** | **542736**[1)] | – | 6,000 | 2.0 | 1 |
| **FUS 41/2,5 A2 - 2 m** | **504470** | Yes | 2,000 | 2.5 | 1 |
| **FUS 41/2,5 A2 - 6 m** | **542737**[1)] | Yes | 6,000 | 2.5 | 1 |
| **FUS 21/2,0 A4 - 2 m** | **504472** | – | 2,000 | 2.0 | 1 |
| **FUS 21/2,0 A4 - 6 m** | **542738**[1)] | – | 6,000 | 2.0 | 1 |
| **FUS 41/2,0 A4 - 2 m** | **504474** | – | 2,000 | 2.0 | 1 |
| **FUS 41/2,0 A4 - 6 m** | **542739**[1)] | – | 6,000 | 2.0 | 1 |
| **FUS 41/2,5 A4 - 2 m** | **504475** | Yes | 2,000 | 2.5 | 1 |
| **FUS 41/2,5 A4 - 6 m** | **542740**[1)] | Yes | 6,000 | 2.5 | 1 |
| **FUS 41D/2,5 A4 - 6 m** | **562655** | – | 6,000 | 2.5 | 1 |
| **FUS 62/2,5 A4 - 6 m** | **557765** | Yes | 6,000 | 2.5 | 1 |

[1)] Delivery time on request.

For load information under fire exposure, see chapter Basic knowledge.

## Loads

| Item | Item no. | Profile weight [kg/m] | Channel cross section [$cm^2$] | Moment of inertia $I_y$ [$cm^4$] | Moment of inertia $I_z$ [$cm^4$] | Section modulus $W_y$ [$cm^3$] | Section modulus $W_z$ [$cm^3$] | Max. recommended static load for 1m length $F_{rec}$ [kN] | Max. recommended static load for 2m length $F_{rec}$ [kN] | Max. recommended static load for 3m length $F_{rec}$ [kN] | Sales unit [pcs] |
|---|---|---|---|---|---|---|---|---|---|---|---|
| **FUS 21/2,0 A2 - 2 m** | **504466** | 1.44 | 1.72 | 0.97 | 4.66 | 0.89 | 2.27 | 0.47 | 0.12 | – | 1 |
| **FUS 21/2,0 A2 - 6 m** | **542735**[1)] | 1.44 | 1.72 | 0.97 | 4.66 | 0.89 | 2.27 | 0.47 | 0.12 | 0.05 | 1 |
| **FUS 41/2,0 A2 - 2 m** | **504468** | 2.06 | 2.52 | 5.33 | 7.69 | 2.58 | 3.75 | 1.58 | 0.64 | – | 1 |

[1)] Delivery time on request.

## Loads

| Item | Item no. | Profile weight [kg/m] | Channel cross section [$cm^2$] | Moment of inertia $I_y$ [$cm^4$] | Moment of inertia $I_z$ [$cm^4$] | Section modulus $W_y$ [$cm^3$] | Section modulus $W_z$ [$cm^3$] | Max. recommended static load for 1m length $F_{rec}$ [kN] | Max. recommended static load for 2m length $F_{rec}$ [kN] | Max. recommended static load for 3m length $F_{rec}$ [kN] | Sales unit [pcs] |
|---|---|---|---|---|---|---|---|---|---|---|---|
| **FUS 41/2,0 A2 - 6 m** | **542736**[1)] | 2.06 | 2.52 | 5.33 | 7.69 | 2.58 | 3.75 | 1.58 | 0.64 | 0.28 | 1 |
| **FUS 41/2,5 A2 - 2 m** | **504470** | 2.45 | 3.00 | 6.00 | 8.99 | 2.85 | 4.38 | 1.74 | 0.72 | – | 1 |
| **FUS 41/2,5 A2 - 6 m** | **542737**[1)] | 2.45 | 3.00 | 6.00 | 8.99 | 2.85 | 4.38 | 1.74 | 0.72 | 0.32 | 1 |
| **FUS 21/2,0 A4 - 2 m** | **504472** | 1.44 | 1.72 | 0.97 | 4.66 | 0.89 | 2.27 | 0.47 | 0.12 | – | 1 |
| **FUS 21/2,0 A4 - 6 m** | **542738**[1)] | 1.44 | 1.72 | 0.97 | 4.66 | 0.89 | 2.27 | 0.47 | 0.12 | 0.05 | 1 |
| **FUS 41/2,0 A4 - 2 m** | **504474** | 2.06 | 2.52 | 5.33 | 7.69 | 2.58 | 3.75 | 1.65 | 0.64 | – | 1 |
| **FUS 41/2,0 A4 - 6 m** | **542739**[1)] | 2.06 | 2.52 | 5.33 | 7.69 | 2.58 | 3.75 | 1.65 | 0.64 | 0.28 | 1 |
| **FUS 41/2,5 A4 - 2 m** | **504475** | 2.45 | 3.00 | 6.00 | 8.99 | 2.85 | 4.38 | 1.82 | 0.72 | – | 1 |
| **FUS 41/2,5 A4 - 6 m** | **542740**[1)] | 2.45 | 3.00 | 6.00 | 8.99 | 2.85 | 4.38 | 1.82 | 0.72 | 0.32 | 1 |
| **FUS 41D/2,5 A4 - 6 m** | **562655** | 4.89 | 6.00 | 35.01 | 17.90 | 8.76 | 8.78 | 5.60 | 2.79 | 1.85 | 1 |
| **FUS 62/2,5 A4 - 6 m** | **557765** | 6.55 | 8.09 | 111.00 | 25.80 | 17.90 | 12.58 | 11.45 | 5.72 | 3.80 | 1 |

[1)] Delivery time on request.

# Cover cap FEC

The form-flush cover cap, tailored to the FUS channel profiles for a safe termination





## Applications

- Closing for channel FUS and cantilever arms FCA and large cantilever arms FCAM.

## Advantages

- Suitable for channels FUS 21, FUS 41, FUS 62 and cantilever arms FCA and FCAM.

## Properties

- Material: PE polyethylene, colour black

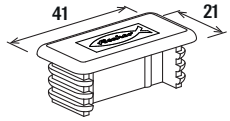


FEC 21 B

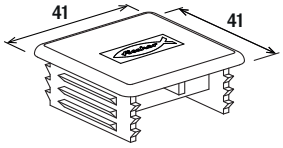


FEC 41 B

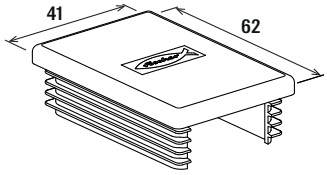


FEC 62 B

## Cover cap FEC

| Item | Item no. | For profile | Material | Sales unit [pcs] |
|---|---|---|---|---|
| **FEC 21 B** | **077357** | 41/21 | Polyethylene, black | 100 |
| **FEC 41 B** | **077355** | 41/41 | Polyethylene, black | 100 |
| **FEC 62 B** | **505551** | 41/62 | Polyethylene, black | 100 |

# Channel connector PFUF OC A4

Construction element - Channel connector PFUF OC A4



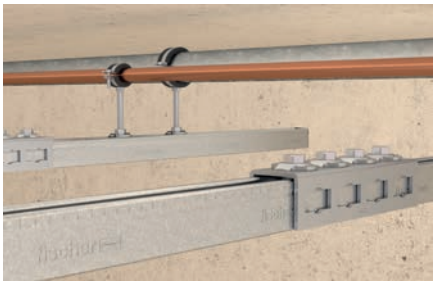

Connector for installation grid

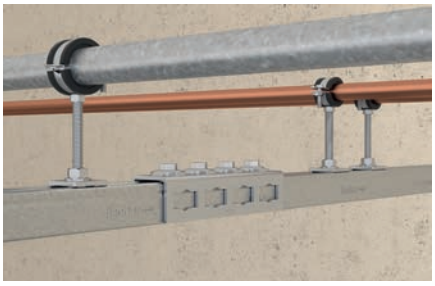

Longitudinal channel connection



## Applications

- Connection and precise alignment of channels.
- For indoor and outdoor applications and in environments with high stress to components due to corrosion.

## Advantages

- The PFUF OC connector in combination with PFCN allows a simple and time-saving installation.

## Properties

- Material: stainless steel A4 (material no. 1.4401)

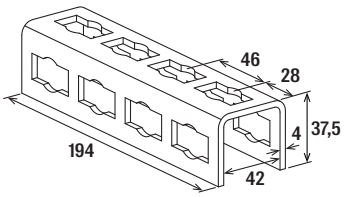


PFUF OC

## Technical data

| Item | Item no. | Length L [mm] | Sales unit [pcs] |
|---|---|---|---|
| **PFUF OC A4** | **562846** | 194 | 6 |

# Socket wrench FSK

FSK socket wrench SW 17 long, the solution for tightening in the FUS mounting channels




## Applications

- Installation of the fischer FUS channel system.
- Tightening anchor bolts and plugs.

## Advantages

- The socket wrench FSK fits perfectly through the open side of the
- FUS mounting channel.
- The two snap-in holes between the impact wrench insert and ½“ socket ensure increased connection accuracy.
- The long length of the socket wrench FSK allows it to be used for the FUS mounting channels 21, 41 and 62.

## Properties

- Material: quenched and tempered steel 42CrMo4 according to EN 10083-3 (material no. 1.7225)
- Coating: black phosphatized

12

## Technical data

| | Item no. | Length L [mm] | Width across nut SW [mm] | For profile | Drive | Sales unit [pcs] |
|---|---|---|---|---|---|---|
| **Item** | | | | | | |
| **FSK Socket wrench SW17-1/2“ long** | **563656** | 100 | 17 | FUS 21, 41, 62 | 1/2“ / SW17 | 1 |

# Cantilever arm FCA A4

FUS profiles with welded base plate for direct mounting on the base material



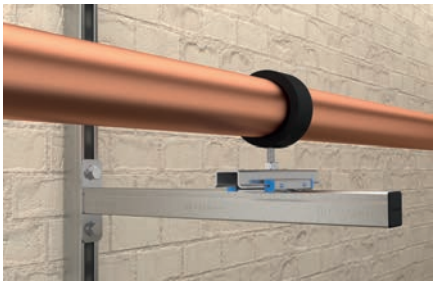

Refrigerant pipe clamp on sliding element



Heavy pipe on cantilever



## Applications

- Quick and easy installation of pipelines (e.g. along the wall)
- For indoor and outdoor application and in environments with high stress to components due to corrosion

## Certificates

R 120

R 30 MLAR

## Advantages

- The fire inspection report in line with MLAR/EN13501 guarantees independently tested functional safety.
- The arm's solid base plate offers a secure hold for load-bearing construction.
- The base plate's long slots, which are at 90° to one another, allow the arm to be easily aligned.
- The stamped teeth in the channel gives the sliding nuts a secure hold for high shear loads, e.g. for vertical installation.

## Properties

- Material: stainless steel A4 (material no. 1.4404)

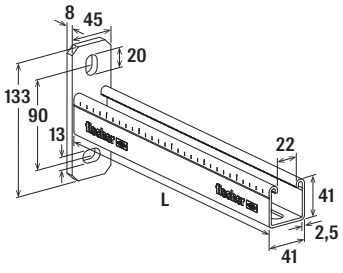


FCA 41/2.5

## Technical data

| Item | Item no. | Fire test report | Profile | Length L [mm] | Sales unit [pcs] |
|---|---|---|---|---|---|
| FCA 41/2.5 A4 - 300 | 505487 | Yes | 41 / 2.5 | 300 | 1 |
| FCA 41/2.5 A4 - 450 | 505488 | Yes | 41 / 2.5 | 450 | 1 |
| FCA 41/2.5 A4 - 600 | 505489 | Yes | 41 / 2.5 | 600 | 1 |

For loads and weight of channels and cantilever arms see from pages 116 and 126.
For load information under fire exposure, see chapter Basic knowledge.

# Channel connector FDCC A4

FDCC A4 channel connector - For easy preparation of FUS double channels

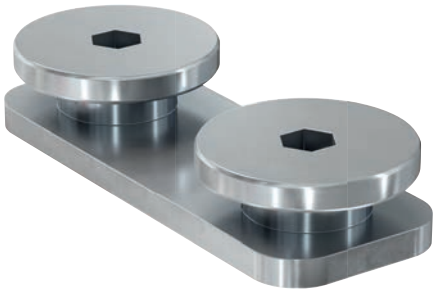

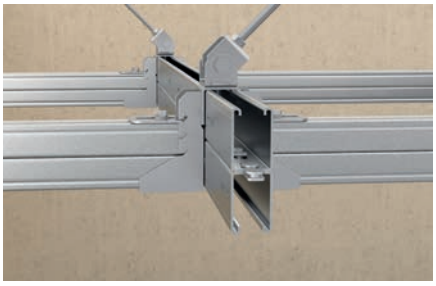

FUS double channel with channel connector



## Applications

- Easy construction of double channels made from the FUS channel assortment.
- Suitable for FUS channels FUS 41 and FUS 62 with thickness 2,0 and 2,5 mm.
- The connection of two single channels is made with the channel connector inside the channel slots.
- Each double channel has to be equipped with an FDCC at both ends and additional FDCCs in the given installation distance as per load chart.
- For indoor and outdoor applications and in environments with high stress to components due to corrosion

## Advantages

- Easy connection of single channels backside to backside to build double channels.
- Simple solution to create individual double channels on job site.

## Properties

- Material base plate: A4 stainless steel (material no. 1.4401)
- Material screw: A4 stainless steel (material no. 1.4401)

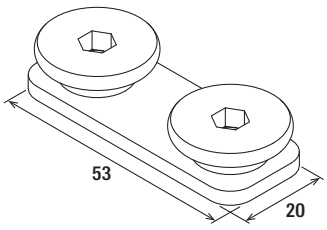


FDCC

## Technical data

| Item | Item no. | Thread A | Drive | Tightening torque $T_{inst}$ [Nm] | Sales unit [pcs] |
|---|---|---|---|---|---|
| **FDCC A4** | **557376** | M10 | Hexagon socket 5 mm | 25 | 100 |

## Load case 1

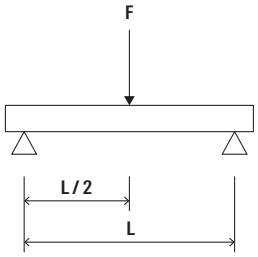


## FUS 41D/2,0 - 2,5

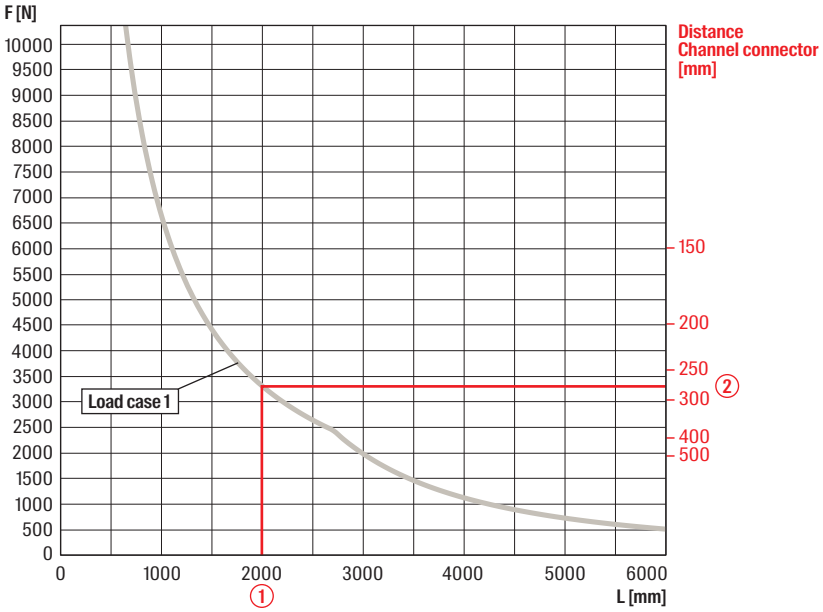


①Length of channel, i.e. 2000 mm for loadcase 1 (single load centric)
②Distance of channel connector (for intermediate values use the lower value, i.e. 250 mm)

## FUS 62D/2,5

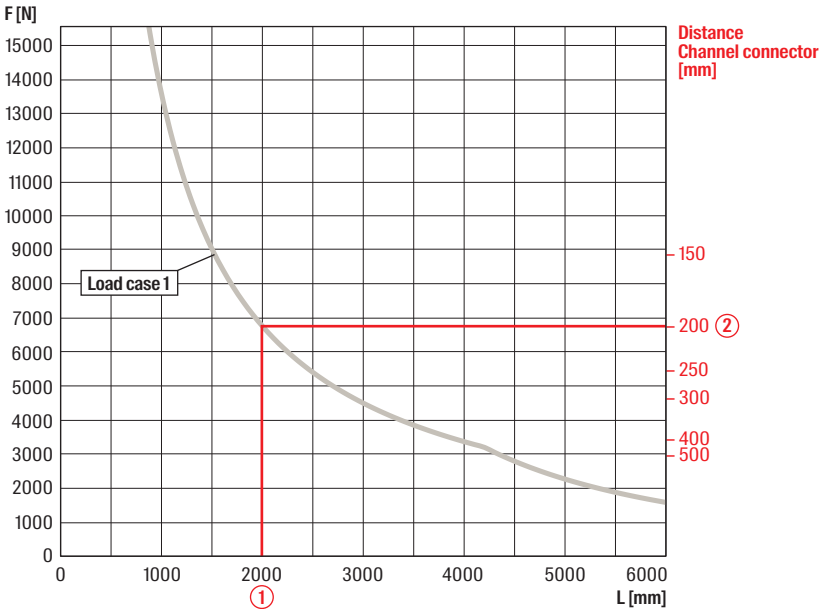


①Length of channel, i.e. 2000 mm for loadcase 1 (single load centric)
②Distance of channel connector (for intermediate values use the lower value)

# Push-through connector PFCN 41 A4

Push-through connector for the quickest and easiest connection of FUS profiles



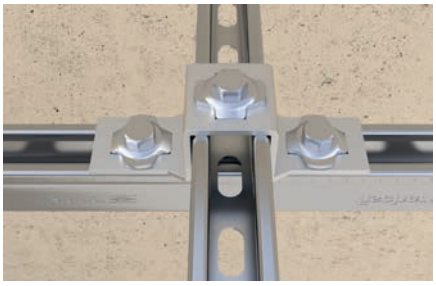

Cross connection on channel



Cantilever with saddle flange



## Applications

- Connection of FUS channels and construction elements by push-through principle.
- Universal fitting for all push-through connection elements and FUS profiles.
- For indoor and outdoor applications and in environments with high stress to components due to corrosion.

## Advantages

- The correct fit of the push-through connector and connection elements allows the quickest and easiest channel connection.
- The spring effect of the PFCN in set state guarantees a simple and precise positioning in the channel.
- The serration on the push-through connector provides a secure hold in the FUS channel.
- Installation by rotating 90° enables generally the post-installation in set channels.

## Properties

- Material cap: stainless steel A4 (material no. 1.4401)
- Material sliding nut: stainless steel A4 (material no. 1.4401)
- Material hexagon screw: stainless steel A4 (material no. 1.4401)
- Material plastic parts: polypropylene

## Installation PFCN

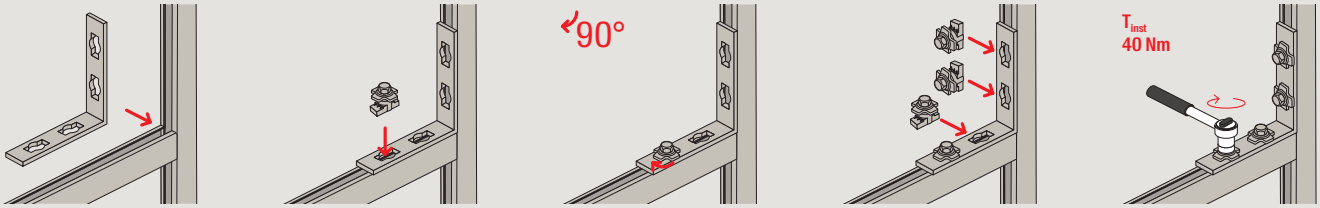

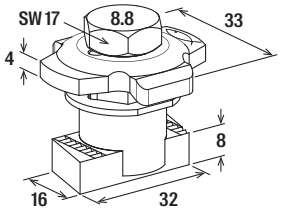


PFCN

## Technical data

| | Item no. | Thread<br>A | Sales unit<br>[pcs] |
|---|---|---|---|
| **Item** | | | |
| **PFCN 41 A4** | **562662** | M10 | 25 |

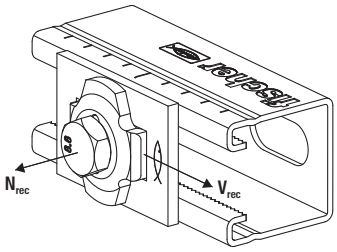


PFCN

## Loads

| | Item no. | Max. recommended tension load for FUS 2,0 mm<br>$N_{rec}$<br>[kN] | Max. recommended tension load for FUS 2,5 mm<br>$N_{rec}$<br>[kN] | Max. recommended shear load for FUS 2,0 mm<br>$V_{rec}$<br>[kN] | Max. recommended shear load for FUS 2,5 mm<br>$V_{rec}$<br>[kN] | Tightening torque for screw grade ≥ 8.8<br>$T_{inst}$<br>[Nm] | Sales unit<br>[pcs] |
|---|---|---|---|---|---|---|---|
| **Item** | | | | | | | |
| **PFCN 41 A4** | **562662** | 5.0 | 7.0 | 4.5 | 5.0 | 40 | 25 |

# Saddle flange PSF A4

Construction element - Saddle flange PSF A4





Pipe installation in escape route



Cantilever with saddle flange



## Applications

- Stable construction of connections between channels and building structures for the push-through system
- For indoor and outdoor applications and in environments with high stress to components due to corrosion

## Advantages

- The perfect-fit saddle allows a simple installation by inserting the mounting channels.
- The saddle flange's stable design offers a secure hold for a load-bearing construction.

## Properties

- Material: stainless steel A4 (material no 1.4401)

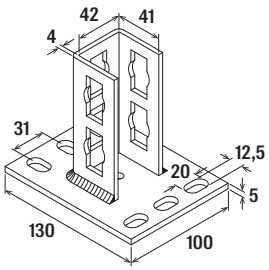


PSF 41

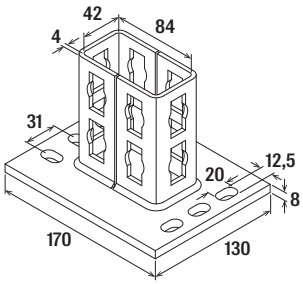


PSF 82

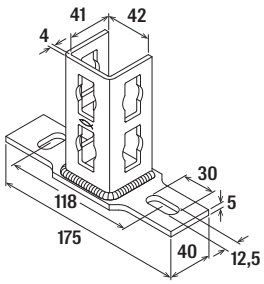


PSFQ 41

## Technical data

| Item | Item no. | For profile | Sales unit [pcs] |
|---|---|---|---|
| **PSF 41 A4** | **562848** | 21D, 41, 62 | 10 |
| **PSF 82 A4** | **562849** | 41 | 5 |
| **PSFQ 41 A4** | **562847** | 41 | 10 |

See push-through connector PFCN 41 A4 for loads.

# Universal bracket PUWS A4

Construction element - Universal bracket PUWS A4





3D-frame constructions



## Applications

- Reinforcement of supporting structures for the push-through system.
- For indoor and outdoor applications and in environments with high stress to components due to corrosion.

## Advantages

- The universal brackets for the connection of FUS channels gives a supporting structure, great stability and safety (we recommend using in pairs).

## Properties

- Material: stainless steel A4 (material no. 1.4401)

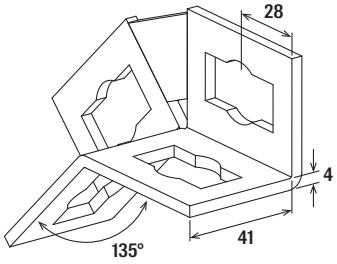


PUWS 2 x 2/135°

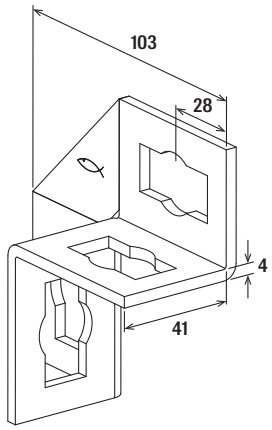


PUWS 2 x 2

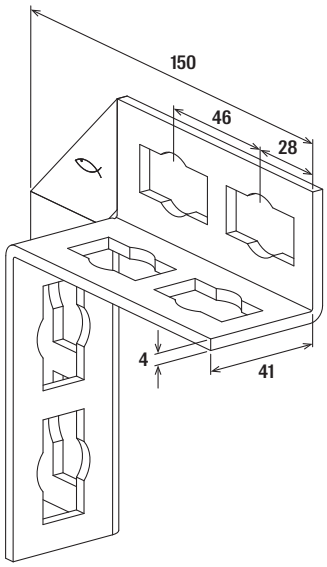


PUWS 4 x 4

## Technical data

| Item | Item no. | | Sales unit [pcs] |
|---|---|---|---|
| **PUWS 2 x 2/135° A4** | **562835** | | 10 |
| **PUWS 2 x 2 A4** | **562833** | | 10 |
| **PUWS 4 x 4 A4** | **562834** | | 8 |

See push-through connector PFCN 41 A4 for loads.

# Angle bracket PWK A4

Construction element - Angle bracket PWK A4





Solid frame construction



Solid frame construction



## Applications

- Reinforcement in the push-through system and for lateral fixing to the substrate.
- For indoor and outdoor applications and in environments with high stress to components due to corrosion.

## Advantages

- The stable angle bracket ensures a supporting structure with a very high level of stability and safety.

## Properties

- Material: stainless steel A4 (material no. 1.4401)

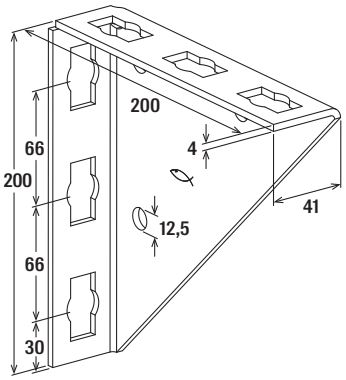


PWK 200

## Technical data

| Item | Item no. | | Sales unit [pcs] |
|---|---|---|---|
| PWK 200/200 A4 | 562837 | | 10 |

See push-through connector PFCN 41 A4 for loads.

# Variable bracket PVB A4

Construction element – Variable bracket PVB A4





Supported channel



Massive bracing of cantilever arm



## Applications

- Variable angular positioning of profile support in the push-through system.
- Bracket for installation with FUS channels from 0° to 180°.
- For indoor and outdoor applications and in environments with high stress to components due to corrosion.

## Advantages

- The design of the variable bracket PVB enables the fixation of mounting channels at an angle of 0° to 180°.
- The holes in the connecting element make it compatible with the push-through connector PFCN.
- The punched holes in the base plate allow the direct fixing onto a wall, ceiling or onto a mounting channel by screw or anchor.

## Properties

- Material: stainless steel A4 (material no. 1.4401)

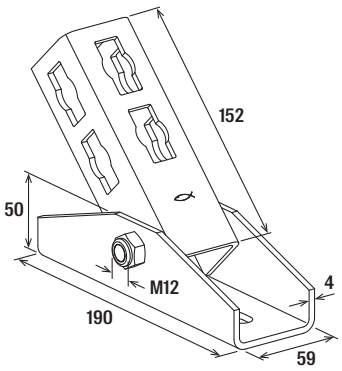


PVB

## Technical data

| Item | Item no. | | Sales unit [pcs] |
|---|---|---|---|
| PVB A4 | 562838 | | 5 |

See push-through connector PFCN 41 A4 for loads.

# Bracing elements PSAE A4

Construction elements – Bracing elements PSAE 300 A4 and PSAE 500 A4





Supported channel



## Applications

- Elements for stable cantilever constructions made of FUS channels or FCA cantilever arms with push-through connector PFCN.
- For indoor and outdoor applications and in environments with high stress to components due to corrosion.

## Advantages

- The stable bracing element PSAE givest-he supporting structure very high stability and safety.
- The holes in the base plate of the element make it compatible with the push-through connector PFCN.
- An additional PU-washer allows for fixing of elements with formholes directly onto a wall or ceiling by anchor or screw.

## Properties

- Material: stainless steel A4 (material no. 1.4401)

## Installation PSAE

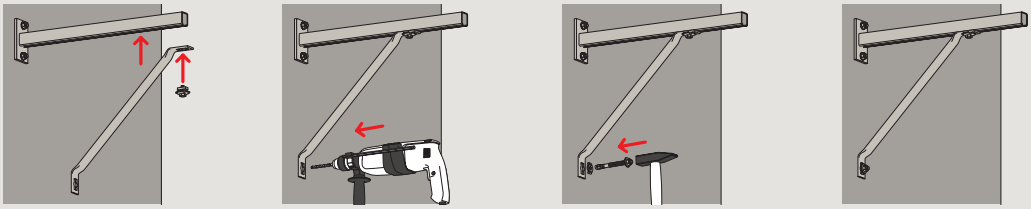

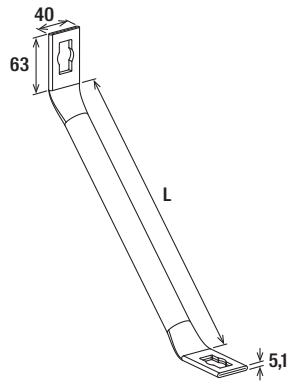


PSAE

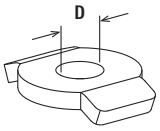


PU

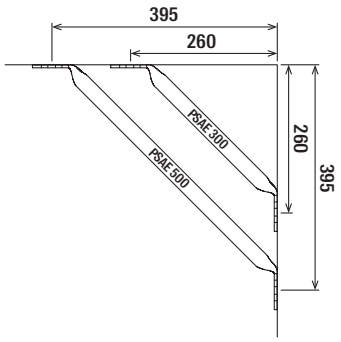


PSAE 300 and PSAE 500

## Technical data

| Item | Item no. | Length L [mm] | Hole-Ø D [mm] | Sales unit [pcs] |
|---|---|---|---|---|
| **PSAE 300 A4** | **562839** | 300 | – | 10 |
| **PSAE 500 A4** | **562840** | 500 | – | 10 |
| **PU 10.5 A4** | **562841** | – | 10.5 | 20 |
| **PU 12.5 A4** | **562842** | – | 12.5 | 20 |

See push-through connector PFCN 41 A4 for loads.

# Bracket PFFF A4

Construction elements - Brackets PFFF A4

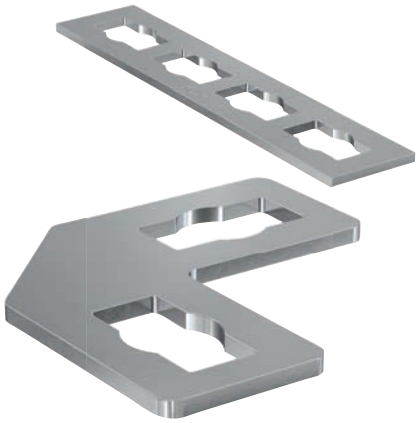



Waste water pipe



## Applications

- Arrangement of simple channel constructions in the push-through system
- For indoor and outdoor applications and in environments with high stress to components due to corrosion

## Advantages

- The holes in the connecting elements make them compatible with the push-through connector PFCN 41.
- Simple creation of channel structures in conjunction with FUS channels and PFCN 41 .
- Quick installation by rotating the PFCN 41 in the channel by 90° clockwise.

## Properties

- Material: stainless steel A4 (material no. 1.4401)

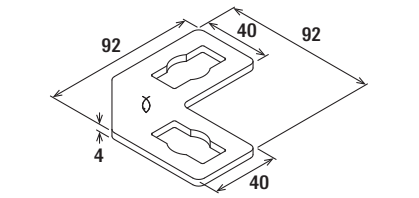


PFFF 2L

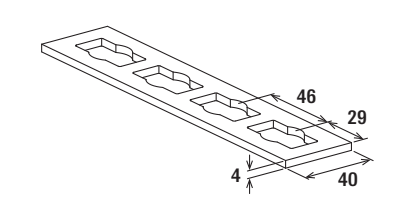


PFFF 4L

## Technical data

| Item | Item no. | | Sales unit [pcs] |
|---|---|---|---|
| PFFF 2L A4 | 562827 | | 20 |
| PFFF 4L A4 | 562828 | | 25 |

See push-through connector PFCN 41 A4 for loads.

# Bracket PFAF A4

Construction elements - Brackets PFAF A4



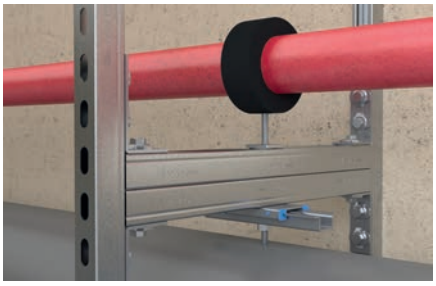

Frame constructions

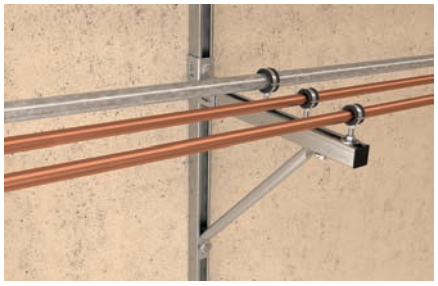

Lightweight installation on cantilever

## Applications

- Arrangement of simple channel constructions in the push-through system.
- For indoor and outdoor applications and in environments with high stress to components due to corrosion.

## Advantages

- The holes in the connecting elements make them compatible with the push-through connector PFCN.
- Simple creation of channel structures in conjunction with FUS channels and PFCN 41.
- Quick installation by rotating the PFCN 41 in the channel by 90° clockwise.

## Properties

- Material: stainless steel A4 (material no. 1.4401)

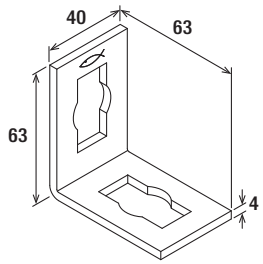


PFAF 2

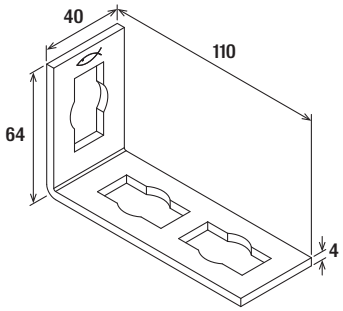


PFAF 3

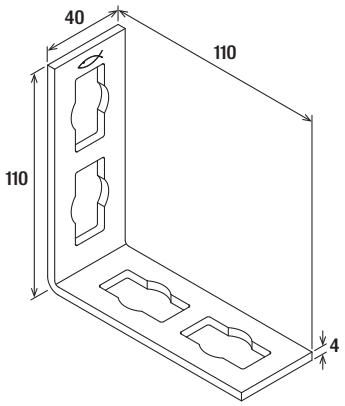


PFAF 4

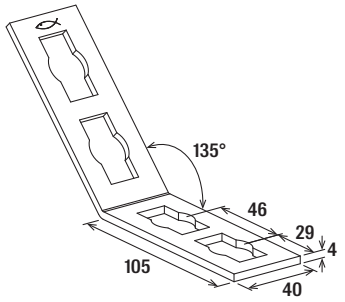


PFAF 4/135°



## Technical data

| Item | Item no. | | Sales unit [pcs] |
|---|---|---|---|
| **PFAF 2 A4** | **562829** | | 25 |
| **PFAF 3 A4** | **562830** | | 25 |
| **PFAF 4/135° A4** | **562831** | | 20 |
| **PFAF 4 A4** | **562832** | | 25 |

See push-through connector PFCN 41 A4 for loads.

# Bracket PFUF 41 A4

Construction elements - Bracket PFUF A4

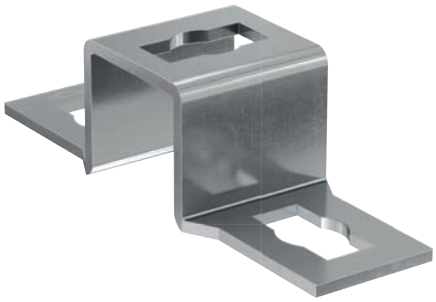

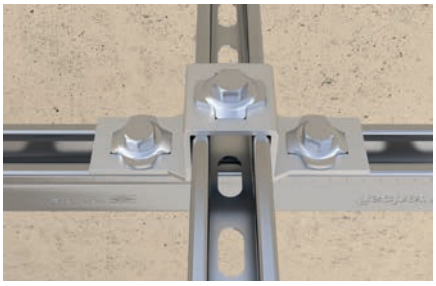

Cross connection on channel

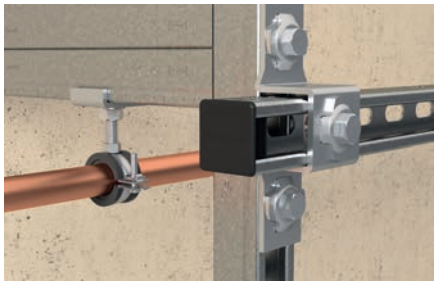

Cross connection on channel



## Applications

- Connecting element for the production of multi-dimensional constructions with FUS channels using push-through connector PFCN.
- For indoor and outdoor applications and in environments with high stress to components due to corrosion.

## Advantages

- The various shapes of the connecting elements offer flexibility during the installation of channel constructions.
- The holes in the connecting elements make them compatible with the push-through channel nut PFCN.
- Simple creation of channel structures in conjunction with FUS channels and PFCN 41.
- Quick installation by rotating the PFCN 41 in the channel by 90° clockwise.

## Properties

- Material: stainless steel A4 (material no. 1.4401)

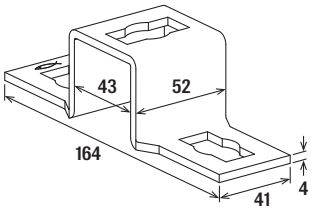


PFUF 41

## Technical data

| | Item no. | | Sales unit [pcs] |
|---|---|---|---|
| **Item** | | | |
| **PFUF 41 A4** | **562836** | | 10 |

See push-through connector PFCN 41 A4 for loads.

# Bracket PFUF D A4

Construction elements - Brackets PFUF 2D A4, 3D A4 and 4D A4



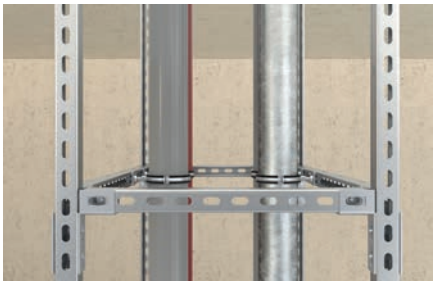

Frame constructions



Frame constructions



## Applications

- Connecting elements for multidimensional constructions with FUS channels connected by the push-through connector PFCN.
- For indoor and outdoor applications and in environments with high stress to components due to corrosion

## Advantages

- The multidimensional PFUF A4 construction elements enable multidimensional constructions in a very short time.
- The holes in the construction elements make them compatible with the push-through connector PFCN.
- The different shapes of the construction elements generate a high flexibility for channel constructions.

## Properties

- Material: stainless steel A4 (material no. 1.4401)

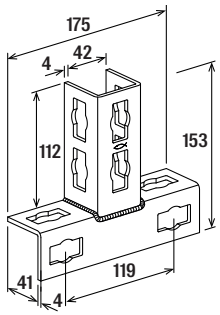


PFUF 2D

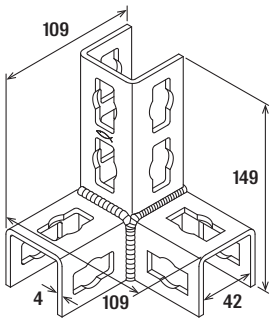


PFUF 3DL

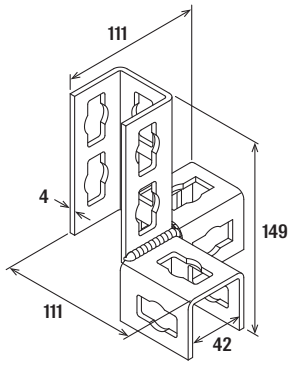


PFUF 3DR

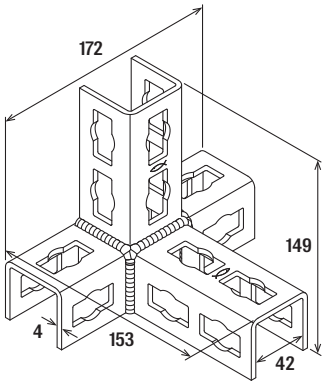


PFUF 4D

## Technical data

| Item | Item no. | | Sales unit [pcs] |
|---|---|---|---|
| **PFUF 2D A4** | **563150** | | 10 |
| **PFUF 3DL A4** | **562843** | | 10 |
| **PFUF 3DR A4** | **562844** | | 10 |
| **PFUF 4D A4** | **562845** | | 10 |

See push-through connector PFCN 41 A4 for loads.

# Channel nut FCN Clix P A4

Channel nut for quick and easy fixing in FUS profiles



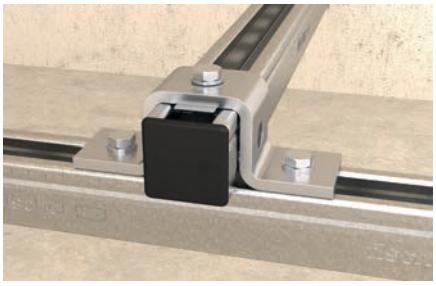

Cross connection

12

## Applications

- Connection of FUS channels and fixtures.
- For indoor and outdoor applications and environments with high stress to components due to corrosion.

## Certificates

R 120

R 30 MLAR

## Advantages

- The sliding nut design allows for quick and easy setting in the channel.
- The spring effect of the plastic clasp guarantees simple and precise positioning in the channel.
- The FCN Clix P's flat plastic mounting with wings offers a good hold and allows the fixtures to be conveniently mounted.
- The serration on the sliding nut provides a secure hold in the FUS channel.
- Installation by rotating 90° enables post-installation in installed channel.

## Properties

- Material stainless steel A4 (material no. 1.4401)
- Material plastic: nylon PA 6.

## Installation FCN Clix P

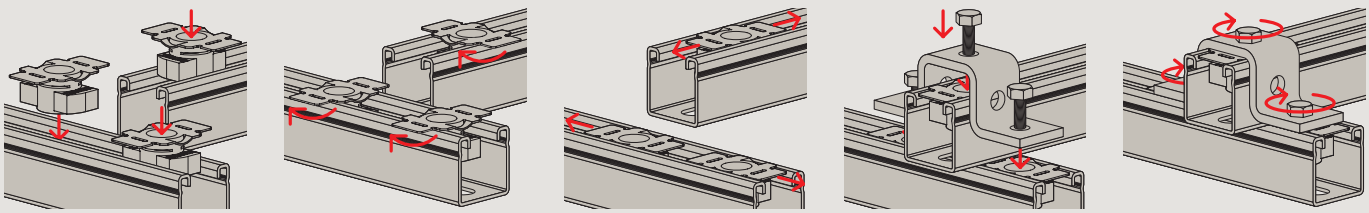

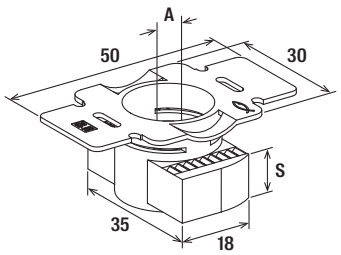


FCN Clix P

## Technical data

| Item | Item no. | Thread<br>A | Thickness<br>S<br>[mm] | Sales unit<br>[pcs] |
|---|---|---|---|---|
| FCN Clix P 8 A4 | 559754 | M8 | 6.0 | 25 |
| FCN Clix P 10 A4 | 559755 | M10 | 8.0 | 25 |
| FCN Clix P 12 A4 | 559756 | M12 | 9.5 | 25 |

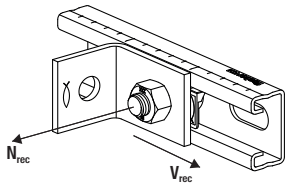


FCN Clix P

## Loads

| Item | Item no. | Max. recommended tension load for FUS 2,0 mm<br>$N_{rec}$<br>[kN] | Max. recommended tension load for FUS 2,5 mm<br>$N_{rec}$<br>[kN] | Max. recommended shear load for FUS 2,0 mm<br>$V_{rec}$<br>[kN] | Max. recommended shear load for FUS 2,5 mm<br>$V_{rec}$<br>[kN] | Tightening torque<br>$T_{inst}$<br>[Nm] | Sales unit<br>[pcs] |
|---|---|---|---|---|---|---|---|
| FCN Clix P 8 A4 | 559754 | 4.0 | 4.0 | 4.0 | 4.0 | 20 | 25 |
| FCN Clix P 10 A4 | 559755 | 5.0 | 8.0 | 5.0 | 8.0 | 40 | 25 |
| FCN Clix P 12 A4 | 559756 | 5.0 | 8.0 | 5.0 | 8.0 | 50 | 25 |

# Channel nut FCN Clix M A4

Channel nut for quick and easy fixing in FUS profiles



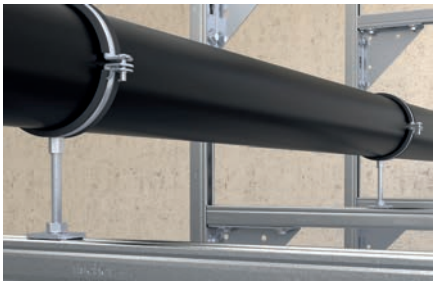

Connection on channel



## Applications

- Connection of pipe clamps to FUS channel under the use of threaded rods.
- For indoor and outdoor applications and environments with high stress to components due to corrosion.

## Advantages

- The sliding nut design enables a quick and easy setting in the channel.
- The serration on the sliding nut provides a secure hold in the FUS channel.
- Installation by rotating 90° enables post-installation in installed channel.

## Properties

- Material: stainless steel A4 (material no. 1.4401)
- Material plastic: Nylon PA6

## Certificates

R 120

R 30 MLAR

## Installation FCN Clix M

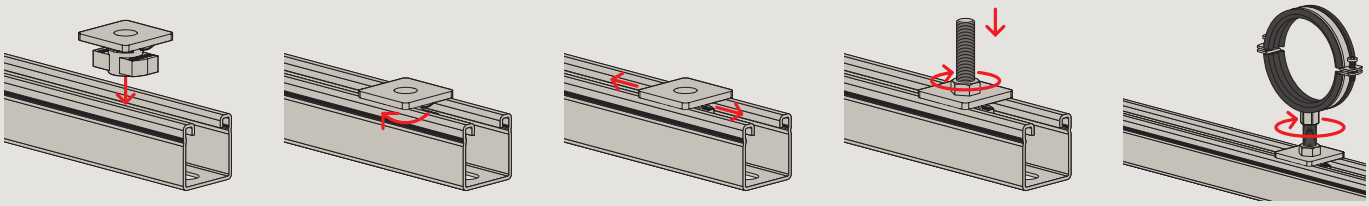

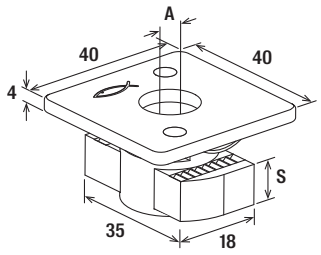


FCN Clix M

## Technical data

| Item | Item no. | Thread<br>A | Thickness<br>S<br>[mm] | Sales unit<br>[pcs] |
|---|---|---|---|---|
| **FCN Clix M 8 A4** | **559752** | M8 | 6.0 | 25 |
| **FCN Clix M 10 A4** | **559753** | M10 | 8.0 | 25 |
| **FCN Clix M 12 A4** | **562663** | M12 | 9.5 | 25 |

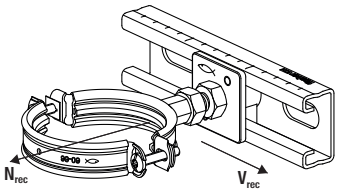


FCN Clix M

## Loads

| Item | Item no. | Max. recommended tension load for FUS 2,0 mm<br>$N_{rec}$<br>[kN] | Max. recommended tension load for FUS 2,5 mm<br>$N_{rec}$<br>[kN] | Tightening torque<br>$T_{inst}$<br>[Nm] | Sales unit<br>[pcs] |
|---|---|---|---|---|---|
| **FCN Clix M 8 A4** | **559752** | 4.0 | 4.0 | 10 | 25 |
| **FCN Clix M 10 A4** | **559753** | 5.0 | 8.0 | 15 | 25 |
| **FCN Clix M 12 A4** | **562663** | 5.0 | 8.0 | 20 | 25 |

# Channel nut FCN A4

Connector - Channel nut FCN A4





## Applications

- Simple hammer-head nut for installation in FUS channels.
- The FCN is suitable for the connection of different fixtures and pipe clamps with the channel.
- For indoor and outdoor applications and in environments with high stress to components due to corrosion.

## Advantages

- The serration on the sliding nut provides a secure hold in the FUS channel.

## Properties

- Material: stainless steel A4 (material no. 1.4401)

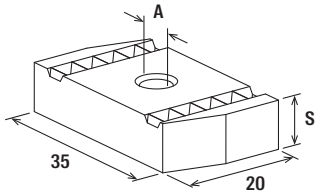


FCN

## Technical data

| Item | Item no. | Thread A | Thickness S [mm] | Sales unit [pcs] |
|---|---|---|---|---|
| **FCN 16 A4** | **562664** | M16 | 12.0 | 50 |

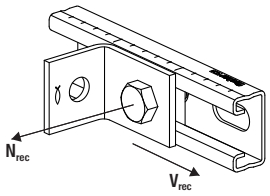


FCN

## Loads

| | Item no. | Max. recommended tension load for FUS 2,0 mm $N_{rec}$ [kN] | Max. recommended tension load for FUS 2,5 mm $N_{rec}$ [kN] | Max. recommended shear load for FUS 2,0/2,5 mm $V_{rec}$ [kN] | Tightening torque for screw grade ≥ 8.8 $T_{inst}$ [Nm] | Sales unit [pcs] |
|---|---|---|---|---|---|---|
| **Item** | | | | | | |
| **FCN 16 A4** | **562664** | 5.0 | 8.0 | 3.0 | 50 | 50 |

# Saddle flange SF L 41 A4

Construction element - Saddle flange SF L 41 A4

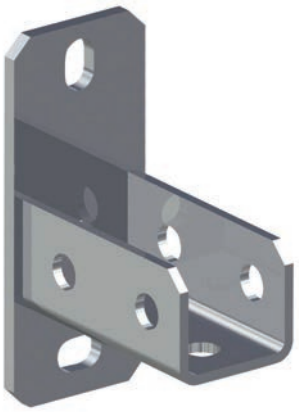



Pipe installation in escape route



## Applications

- For solid connections between the massive profile and building structures.
- For indoor and outdoor applications and in environments with high stress to components due to corrosion.

## Advantages

- The perfect-fit saddle of the SF enables a simple installation by inserting the channel.
- The saddle flange‘s stable design offers a secure hold for a load-bearing construction.
- Fire resistance classification R120 & German model pipeline system guideline MLAR R30.

## Properties

- Material: stainless steel A4 (material no. 1.4401) acc. DIN EN 10088-1

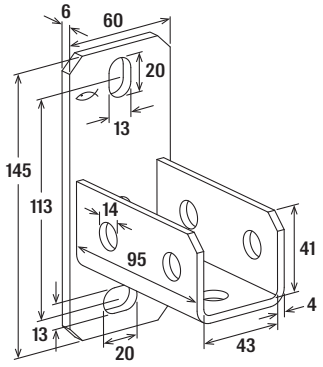


SF L 41

## Technical data

| Item | Item no. | Fire test report | For profile | Sales unit [pcs] |
|---|---|---|---|---|
| SF L 41 A4 | 504522 | Yes | FUS 21 + FUS 41 | 10 |

# Bracket FAF A4

Construction elements - Mounting bracket FAF A4



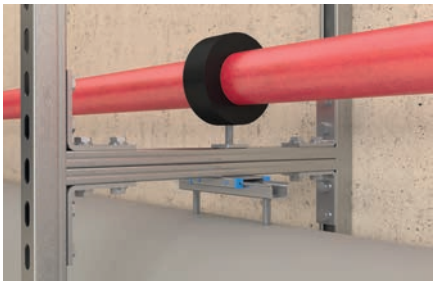

Frame constructions



## Applications

- Connecting elements for the joining or strengthening of simple channel constructions.
- For indoor and outdoor applications and in environments with high stress to components due to corrosion.

## Advantages

- The various shapes of the connectors offer flexibility when it comes to the installation of channel constructions.
- The holes in the connectors guarantee a system fit with the FCN Clix P.

## Properties

- Material: stainless steel A4 (material no. 1.4401) acc. DIN EN 10088-1

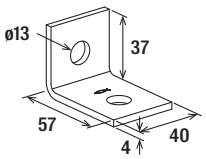


FAF 2

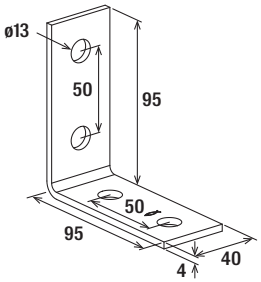


FAF 4

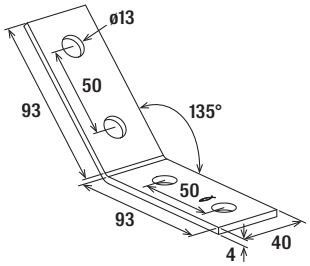


FAF 4/135°

## Technical data

| Item | Item no. | | Sales unit [pcs] |
|---|---|---|---|
| FAF 2 A4 | 547512 | | 25 |
| FAF 4 A4 | 547513 | | 25 |
| FAF 4/135° A4 | 547514 | | 25 |

# Variable bracket VB A4

Construction element – Variable bracket VB A4





Massive bracing of cantilever arm



## Applications

- Variable bracket to build up and strengthen supporting structures of FUS channel constructions with an angle from 0° to 180°.
- For indoor and outdoor applications and in environments with high stress to components due to corrosion

## Advantages

- The design of the variable bracket VB enables the fixation of mounting channels at an angle of 0° to 180°.
- Due to the perforations on all sides of the VB, channels can be mounted with the channel opening facing downwards or laterally.
- The punched holes in the base plate allow the direct fixing onto a wall, ceiling or onto a mounting channel.

## Properties

- Material: stainless steel A4 (material no. 1.4401)

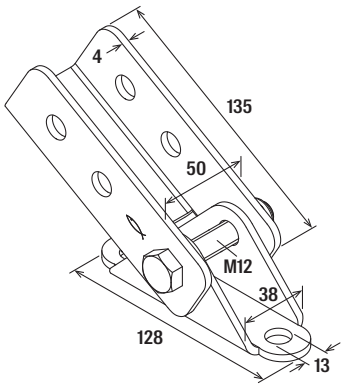


VB

## Technical data

| Item | Item no. | | Sales unit [pcs] |
|---|---|---|---|
| VB A4 | 563574 | | 5 |

See channel nut FCN Clix P A4 for loads.

# Channel washer HK 41 A4

Connector - Channel washer HK 41 A4





Channel installation at ceiling



## Applications

- The channel washer HK is used for stable connections and to strengthen the FUS profile for a fixing to the substrate.
- For indoor and outdoor applications and in environments with high stress to components due to corrosion.

## Advantages

- Perfect connection with the FUS channel thanks to laterally curved contours.
- The shape of the channel washer makes the push-through installations of channel profiles quick and easy.
- Fire resistance classification R120 & German model pipeline system guideline MLAR R30.

## Properties

- Material: stainless steel A4 (material no 1.4401) acc. DIN EN 10088-1

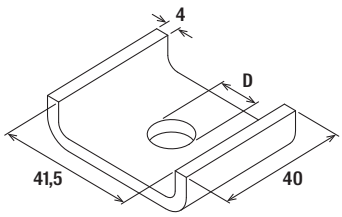


HK 41

## Technical data

| Item | Item no. | Fire test report | For profile | Hole-Ø D [mm] | Sales unit [pcs] |
|---|---|---|---|---|---|
| **HK 41 12.5 - A4** | **559750** | Yes | all FUS channels | 12.5 | 25 |
| **HK 41 17 - A4** | **562665** | No | all FUS channels | 17 | 25 |

# Beam clamp TKR A4

Clamp for fixing of profiles to steel girders






## Applications

- Fixing to steel girders requires two clamps per connection.
- For indoor and outdoor applications and in environments with high stress to components due to corrosion.

## Advantages

- The design of the beam clamp allows fixing without drilling or welding.
- The various lengths of the beam clamp enable the fixing on most standard beams.
- The shape of the beam clamp allows the simple adjustment of the channel connection.

## Properties

- Material: stainless steel A4 (material no 1.4401) acc. DIN EN 10088-3

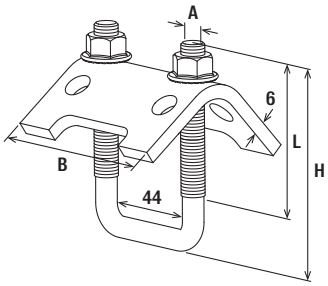


TKR

## Technical data

| Item | Item no. | For profile | Sales unit [pcs] |
|---|---|---|---|
| **TKR 21-42 A4** | **559751** | FUS 21 + FUS 21D + FUS 41 | 10 |
| **TKR 82 A4** | **562666** | FUS 62 + FUS 41D | 10 |

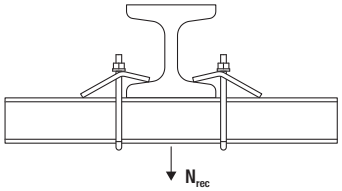


TKR

## Loads

| Item | Item no. | Max. recom. static load (centr. tension) $N_{rec}$ [kN] | Tightening torque $T_{inst}$ [Nm] | Max. clamping range girders [mm] | Sales unit [pcs] |
|---|---|---|---|---|---|
| **TKR 21-42 A4** | **559751** | 10.00 | 20 | 25 | 10 |
| **TKR 82 A4** | **562666** | 10.00 | 20 | 25 | 10 |

# Beam clamp TKL A4

Clamp hanger TKL - the easy fixing solution without welding and drilling





Heavy drainage pipe on beam clamp



## Applications

- Clamp hangers allow for simple fixing by clamping direct to steel girders.
- For indoor and outdoor applications and in environments with high stress to components due to corrosion.

## Advantages

- The TKL design with its clamping screw allows for fixing to steel girders without the need for welding and drilling.
- The design of the clamping screw prevents it from slipping from the steel girder.
- The solid TKL design guarantees a high load-bearing capacity.
- The TKL with through-hole allows for height adjustment after installation.

## Properties

- Material TKL: stainless steel A4 (material no. 1.4401 / AISI316) acc. to EN 10088-3
- Material bolt: stainless steel A4 acc. to DIN 933 with cup point (CP) acc. to EN ISO 4573
- Material nut: stainless steel A4 acc. to DIN 439

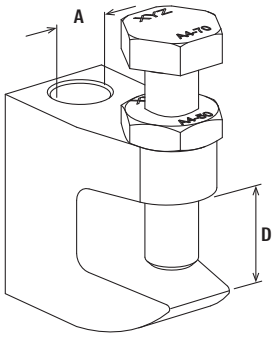


TKL

## Technical data

| Item | Item no. | Clamping range D [mm] | Thread A | Max. recom. static load (centr. tension) $N_{rec}$ [kN] | Sales unit [pcs] |
|---|---|---|---|---|---|
| TKL Ø9 A4/AISI316 | 564395 | 0 - 18 | Ø 9 | 1.20 | 50 |
| TKL Ø11 A4/AISI316 | 564396 | 0 - 20 | Ø 11 | 2.50 | 50 |
| TKL Ø13 A4/AISI316 | 564397 | 0 - 26 | Ø 13 | 3.50 | 50 |

# Beam clamp TKLS A4

Clamp hangers for easy fixing to steel girders with just one tool





## Applications

- All kind of fixings by threaded rods to steel beams with sloping flange plate up to 14%.
- Retaining straps SS-TKL are required for VdS equipment over Ø 65 mm.
- For indoor and outdoor applications and in environments with high stress to components due to corrosion.

## Advantages

- The TKLS design with hammering wedge allows fixing to steel beams without the need of welding and drilling.
- The teeth of the TKLS effectively prevent from slipping off the steel beam.
- VdS and FM approval guarantees objectively tested functional safety.
- The TKLS made of steel guarantees highest load-bearing capacity.
- The TKLS allows pre-assembling of threaded rods and for retrospective height adjustment.

## Properties

- Material: stainless steel A4 (material no. 1.4404 / AISI316L) acc. to EN 10088-3

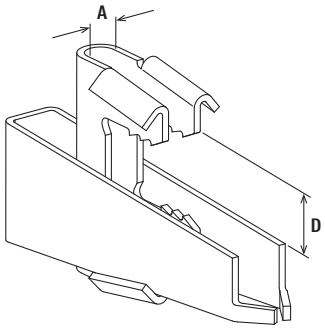


TKLS

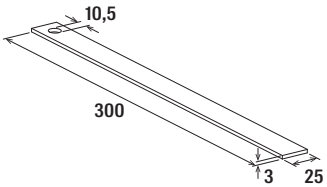


SS-TKLS

## Technical data

| Item | Item no. | FM approval | VdS approval | Hole-Ø A [mm] | Clamping range D [mm] | Max. recom. static load (centr. tension) $N_{rec}$ [kN] | Max. recom. pipe-ø acc. VDS CEA 4001 | Sales unit [pcs] |
|---|---|---|---|---|---|---|---|---|
| TKLS Ø 11 A4 | 564391 | Yes | Yes | 11 | 8 - 20 | 3.50 | > DN 50 ≤ DN 100 | 25 |
| SS-TKLS M10 A4/AISI316 | 564399 | – | Yes | – | – | – | – | 25 |

# Threaded rod G A2/A4

Universal threaded rod for fixing pipes and channels





## Applications

- For indoor and outdoor applications and in environments with high stress to components due to corrosion.
- A2: not suitable for use in environments containing chlorine.

## Properties

- Material: stainless steel A2: material no. 1.4301
- Material: stainless steel A4: material no. 1.4401

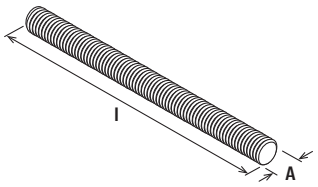


G

## Technical data

| Item | Item no. | Length l [mm] | Thread A | Sales unit [pcs] |
|---|---|---|---|---|
| G M8 x 1000 A2 | 077644 | 1,000 | M8 | 5 |
| G M10 x 1000 A2 | 065173 | 1,000 | M10 | 5 |
| G M8 x 1000 A4 | 077645 | 1,000 | M8 | 5 |
| G M10 x 1000 A4 | 065174 | 1,000 | M10 | 5 |
| G M12 x 2000 A4 | 563016 | 2,000 | M12 | 5 |
| G M16 x 2000 A4 | 563017 | 2,000 | M16 | 5 |

# Threaded stud GS A4

Universal threaded pin for mounting pipes



## Applications

- For indoor and outdoor applications and in environments with high stress to components due to corrosion.

## Properties

- Material: stainless steel A4 (material no. 1.4401) acc. to DIN EN 10088-1



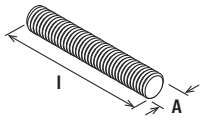


GS

## Technical data

| Item | Item no. | Length l [mm] | Thread A | Sales unit [pcs] |
|---|---|---|---|---|
| **GS M8 x 40 A4** | **559698** | 40 | M8 | 50 |
| **GS M8 x 60 A4** | **559699** | 60 | M8 | 50 |
| **GS M10 x 40 A4** | **559700** | 40 | M10 | 50 |
| **GS M10 x 60 A4** | **559701** | 60 | M10 | 50 |

# Hexagonal screw SKS A4



12

## Applications

- For indoor and outdoor applications and in environments with high stress to components due to corrosion.

## Properties

- Material: stainless steel A4 (material no. 1.4401). Property class: min. 70

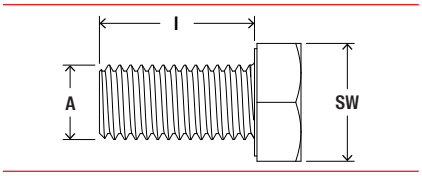


SKS

## Technical data

| Item | Item no. | Thread A | Length l [mm] | Width across nut SW [mm] | Sales unit [pcs] |
|---|---|---|---|---|---|
| SKS M10 x 16 A4 | 570686 | M10 | 16 | 17 | 200 |
| SKS M10 x 25 A4 | 570687 | M10 | 25 | 17 | 200 |
| SKS M10 x 30 A4 | 559704 | M10 | 30 | 17 | 50 |
| SKS M12 x 20 A4 | 570688 | M12 | 20 | 19 | 100 |
| SKS M12 x 25 A4 | 570689 | M12 | 25 | 19 | 50 |
| SKS M12 x 30 A4 | 559705 | M12 | 30 | 19 | 50 |

# Washer U A4

Washer for fischer installation system



## Applications

- For indoor and outdoor applications and in environments with high stress to components due to corrosion.

## Properties

- Material: stainless steel A4 (material no. 1.4401, alternatively 1.4571) acc. to DIN EN 10028-7



## Technical data

| Item | Item no. | Thickness S [mm] | External-ø d [mm] | Hole-Ø D [mm] | Sales unit [pcs] |
|---|---|---|---|---|---|
| **U 8 x 28 A4** | **505542** | 2.0 | 28 | 8.4 | 100 |
| **U 8 x 40 A4** | **505543** | 3.0 | 40 | 8.4 | 100 |
| **U 10 x 30 A4** | **505544** | 2.0 | 30 | 10.5 | 100 |
| **U 10 x 40 A4** | **505545** | 3.0 | 40 | 10.5 | 100 |
| **U 12 x 24 A4** | **505546** | 2.0 | 24 | 12.5 | 100 |
| **U 12 x 40 A4** | **563020** | 3.0 | 40 | 13 | 50 |
| **U 16 x 30 A4** | **563021** | 2.0 | 30 | 17 | 50 |
| **U 16 x 40 A4** | **563022** | 3.0 | 40 | 17 | 50 |

# Hexagonal nut MU A4

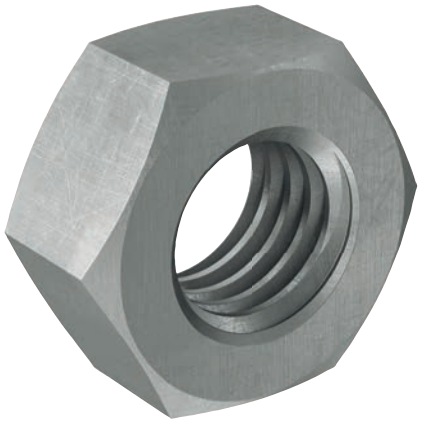

12

## Applications

- For indoor and outdoor applications and in environments with high stress to components due to corrosion.

## Properties

- Material: stainless steel A4, acc. to DIN EN ISO 3506-2
- Property class: min. 50, acc. to DIN EN ISO 3506-2

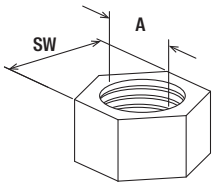


MU

## Technical data

| Item | Item no. | Thread<br>A | Width across nut<br>SW<br>[mm] | Sales unit<br>[pcs] |
|---|---|---|---|---|
| **MU M8 A4** | **559702** | M8 | 13 | 50 |
| **MU M10 A4** | **559703** | M10 | 17 | 50 |
| **MU M12 A4** | **563018** | M12 | 19 | 50 |
| **MU M16 A4** | **563019** | M16 | 24 | 50 |

# Hexagonal connector VM A4

Extension connector for connecting threaded rods



## Applications

- For indoor and outdoor applications and in environments with high stress to components due to corrosion.

## Properties

- Material: stainless steel A4 (material no. 1.4404).



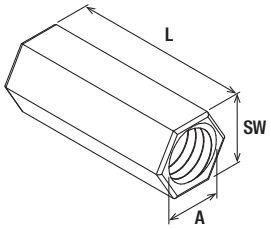


VM

## Technical data

| Item | Item no. | Length L [mm] | Thread A | Sales unit [pcs] |
|---|---|---|---|---|
| **VM M8 A4** | **559706** | 30 | M8 | 50 |
| **VM M10 A4** | **559707** | 30 | M10 | 50 |

# Stud screw STS A2/A4

Stud screw STS for the direct mounting of pipe clamps to the substrate



12

## Applications

- Stud screw for easy fastening of pipe clamps directly to the substrate by adding an adequate plug.
- Direct connection to wooden substrates without dowels by means of wooden thread.
- For indoor and outdoor applications and in environments with high stress to components due to corrosion.
- STS A2: not suitable for use in environments containing chlorine.

## Advantages

- Fixing with a Nylon plug to brick or direct into timber construction is simple with the integrated hexagon.
- Different thread lengths and diameters allow a wide range of applications.

## Properties

- Material: stainless steel A2 (material no. 1.4301), acc. to DIN EN 10088-1
- Material: stainless steel A4 (material no. 1.4401), acc. to DIN EN 10088-1

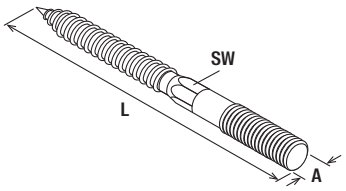


STS

## Technical data

| Item | Item no. | Thread A | Length L [mm] | Width across nut SW [mm] | Sales unit [pcs] |
|---|---|---|---|---|---|
| STS 8 x 80 A2 | 065132 | M8 | 80 | 6 | 100 |
| STS 8 x 100 A2 | 077643 | M8 | 100 | 6 | 100 |
| STS 10 x 100 A2 | 065153 | M10 | 100 | 8 | 100 |
| STS 8 x 120 A2 | 065169 | M8 | 120 | 6 | 100 |
| STS 8 x 100 A4 | 077715 | M8 | 100 | 6 | 100 |
| STS 10 x 100 A4 | 077716 | M10 | 100 | 8 | 100 |



# 13
# Air conditioner fixings


| | | |
|---|---|---|
| Air conditioner fixing MCE | 486 |  |
| Air conditioner fixing KSU | 488 |  |

# Air conditioner fixing MCE

The complete kit for air conditioner fixing on walls





Air conditioner on the outer wall



## Applications

- Universal fixing for air conditioners
- MCE Klima Klik - air conditioner fixing onto walls with max. fixing distance of 760 mm on the horizontal channel
- Please consider: load bearing capacity of the wall and the quality of the substrate

## Advantages

- The complete kit including anti vibration damper, plugs and screws offers an optimised installation security.
- The bracket with quick snap (Klik) simplifies and shortens the installation.
- The horizontal channel of the MCE Klima Klik allows a flexible adjustment of the brackets and simplifies the installation additionally.
- The MCE Klima Klik horizontal channel with included horizontal level tool enables the adjustment without additional tools.

## Properties

- Material: steel
- Coating: powder coating
- Colour: RAL 9002

## Installation Klima Easy Klik

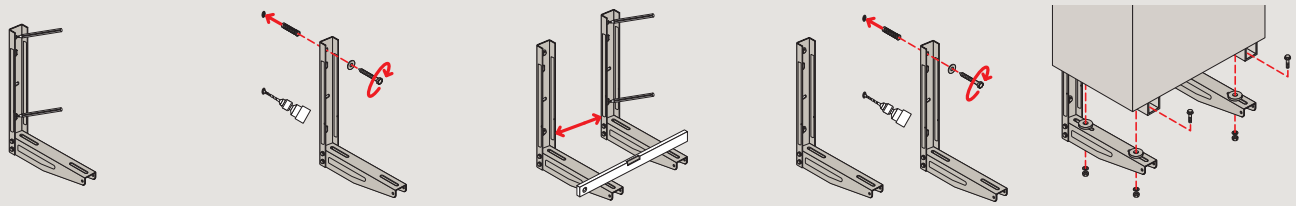

## Installation Klima Klik 420

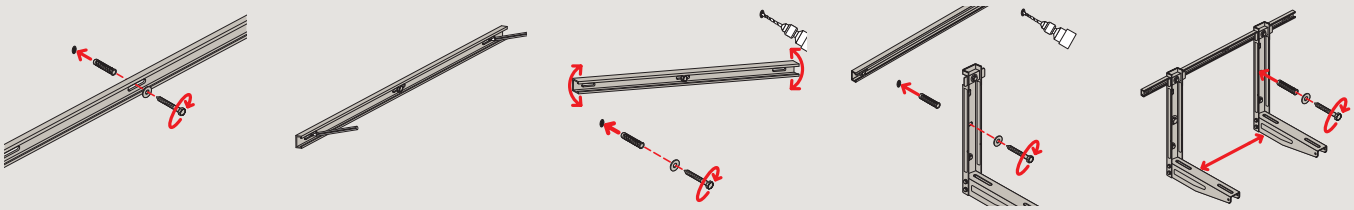

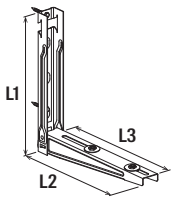


Klima Easy Klik

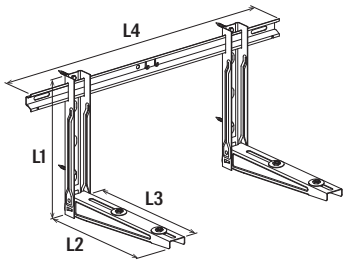


Klima Klik 420

## Technical data

| Item | Item no. | Length L1 [mm] | Length L2 [mm] | Length L3 [mm] | Length L4 [mm] | Max. recommended static load load case 1 $F_{rec}$ [kN] | Max. recommended static load load case 2 $F_{rec}$ [kN] | Sales unit [pcs] |
|---|---|---|---|---|---|---|---|---|
| **KLIMA EASY KLIK** | **521760** | 400 | 420 | 380 | – | 1.00 | 1.00 | 1 |
| **KLIMA KLIK 420** | **521761** | 400 | 420 | 380 | 780 | 1.00 | 1.00 | 1 |

The loads are valid for the use in pairs (two consoles).

## Load case 1

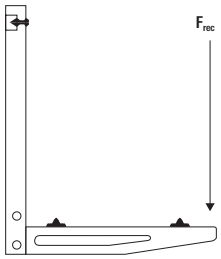


## Load case 2

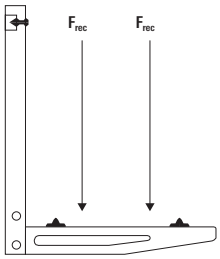

# Air conditioner fixing KSU

The complete kit for fixing of  Air conditioners, pumps or ventilators on walls




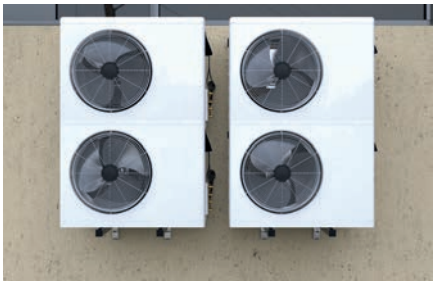

Air conditioning units



## Applications

- Secure attachment of air conditioners, pumps and fans to walls with or without sound insulation element

## Advantages

- The KSU Sets are available in two different versions: KSU without noise reduction dampers and the KSU S with noise reduction dampers.
- The horizontal cantilevers with different lengths and the sliding nut FCN Clix P 8 allow a flexible adjustment of the noise protection dampers to simplify the installation.
- The included sliding nut FCN Clix P 10 with screws for the fixing of the cantilevers offers the possibility of an easy adjustment and a time saving installation.
- The KSU set consists of finished cut channels for instant use and avoids the accumulation of single pieces.

## Properties

- Material channels: steel S250GD+Z275 (material no. 1.0242)
- Material cantilever arms: steel S235JR (material no. 1.0037)
- Zinc plating channels: electro zinc-plated
- Zinc plating cantilever arms: electro zinc-plated

## Installation KSU

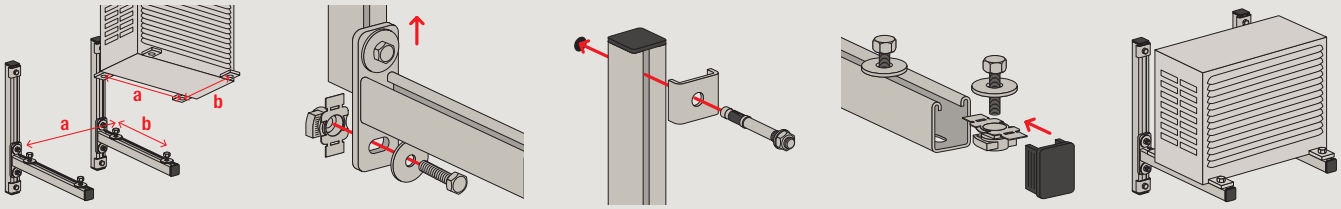


## Installation KSU S

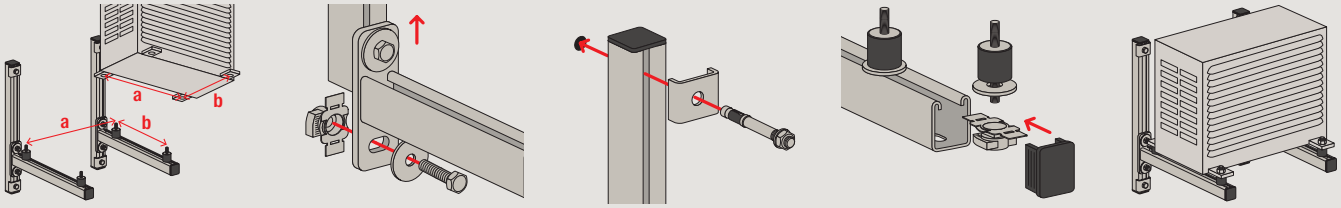

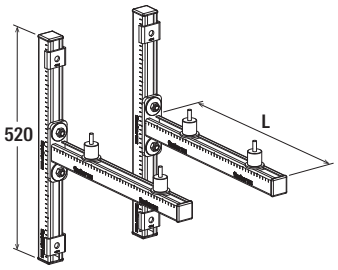


KSU

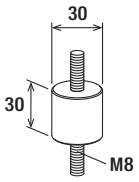


PA 30 x 30

## Technical data

| Item | Item no. | Length L [mm] | Construction with noise protection | Max. recommended static load load case 1 $F_{rec}$ [kN] | Max. recommended static load load case 2 $F_{rec}$ [kN] | Sales unit [pcs] |
|---|---|---|---|---|---|---|
| **KSU 450** | **553733** | 450 | – | 1.50 | 1.50 | 1 |
| **KSU 500** | **553734** | 500 | – | 1.50 | 1.50 | 1 |
| **KSU 600** | **553735** | 600 | – | 1.50 | 1.50 | 1 |
| **KSU S 450** | **553736** | 450 | Yes | 1.50 | 1.50 | 1 |
| **KSU S 500** | **553737** | 500 | Yes | 1.50 | 1.50 | 1 |
| **KSU S 600** | **553738** | 600 | Yes | 1.50 | 1.50 | 1 |
| **PA 30 x 30** | **512715** | – | – | – | – | 4 |

The loads are valid for the use in pairs (two consoles).

## Load case 1

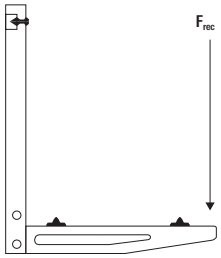


## Load case 2

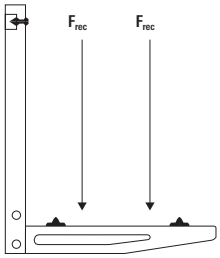

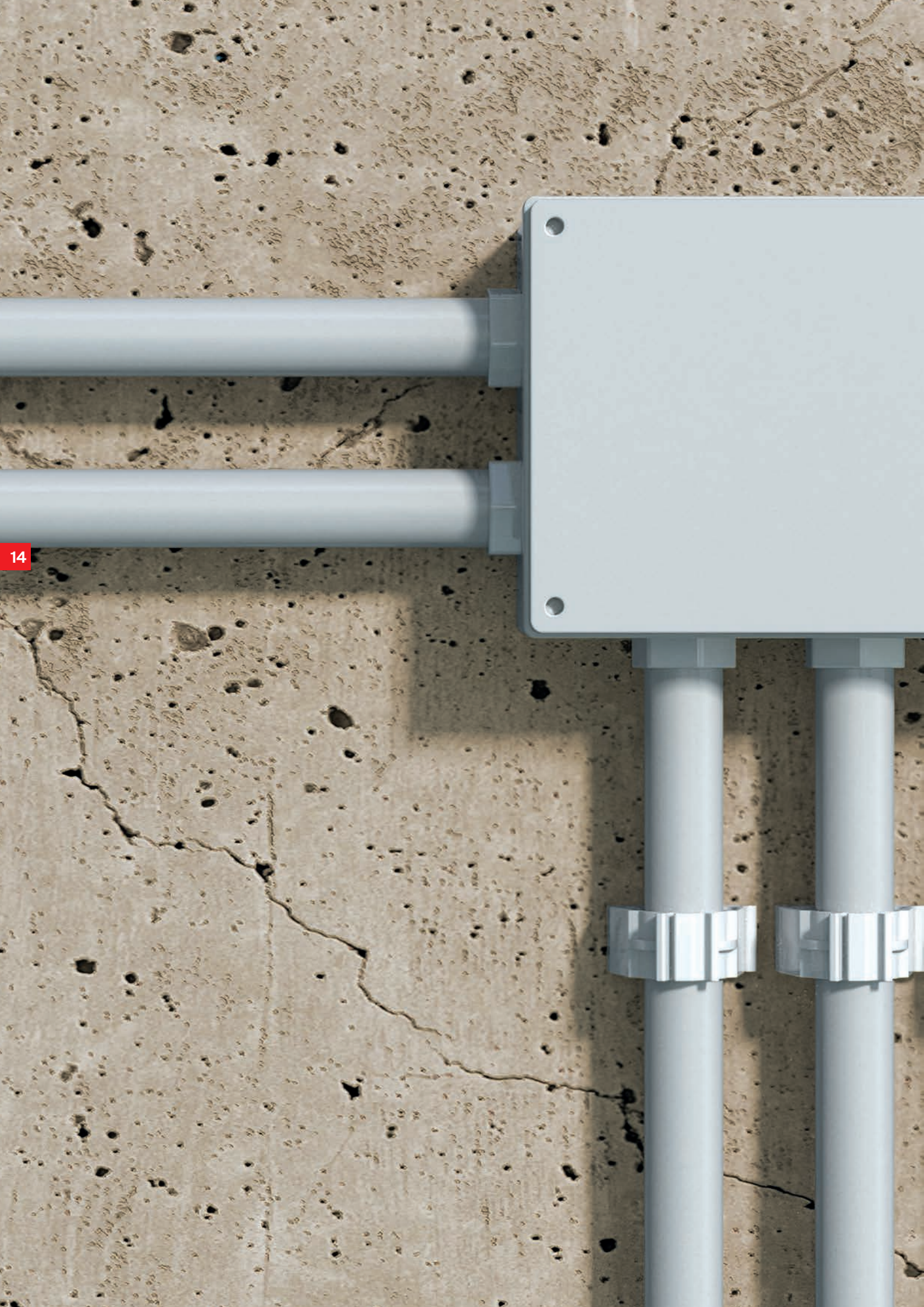

# 14
# Electrical fixings


| | | |
|---|---|---|
| Locking clip SCN | 492 |  |
| Pipe clip RC | 494 |  |
| Pipe clip FC | 496 |  |
| Saddle clip SCH | 498 |  |
| Fastening tie FF | 500 |  |
| ClipFix plus LS/ES/ZS | 502 |  |
| ClipFix plus SD | 504 |  |
| Cable clasp KB | 506 |  |
| Cable harness SHA | 508 |  |
| Multi cable support metal SHA M | 510 |  |
| Wall slot clip FWSC | 512 |  |
| Nail disc NSB | 514 |  |
| Nail clip NS/MNS | 516 |  |
| Spacer pipe clamp AM | 518 |  |
| Conduit clip BSM/BSMD/BSMZ | 520 |  |
| Textile web strapping GWB | 522 |  |
| Perforated steel banding LBV/LBK | 524 |  |
| Impact nail ED | 526 |  |

| | | |
|---|---|---|
| Setting tool SZE | 527 |  |
| Cable tie BN/UBN/GBN | 528 |  |
| Cable tie plug FCTP | 530 |  |
| Wireclip WIC | 532 |  |

# Locking clip SCN

The easy-to-install and secure locking clip for fixing of pipes.



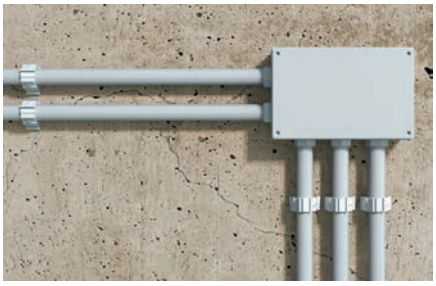

Plastic pipes



Plastic pipes

## Applications

- Plastic, empty pipes
- Flexible and rigid electric tubes
- Aluminium-, copper- and steel pipes

## Advantages

- When pressing, the locking clip SCN automatically embraces and locks the pipe, thus enabling convenient installation.
- The mechanical lock provides a secure and reopenable fixing.
- The integrated slotted hole allows for an easy and adjustable installation.
- The double-sided couplings allow several clips to be coupled together. This saves installation time and money.
- Flexible mounting with plugs and screws or with 11 mm C-profile rails.
- The durable nylon material is halogen- and silicone-free, allows year-round use even under frost and thus ensures a high level of safety.

## Certificates / Features

★★★★★
Nylon
Quality

## Building materials

**When using 2-component DuoPower plug:**

- Concrete
- Solid brick
- Solid sand-lime brick
- Aerated concrete
- Vertically perforated brick
- Perforated sand-lime brick
- Plasterboard
- Gypsum plasterboard and gypsum fibreboards
- Hollow blocks made from lightweight concrete
- Cavity floor slabs made from bricks and concrete or similar
- Natural stone
- Chipboard
- Solid panel made from gypsum
- Solid brick made from lightweight concrete

## Functioning

- The locking clip SCN is fixed in pre-positioned installation with a suitable plug and screw or in 11 mm C-profile rails.
- Due to the mechanical locking, the pipes are securely fixed with the clip.
- Installation temperature -20 °C + 60 °C
- Temperature resistance when installed -40 °C to +80 °C.

## Installation SCN

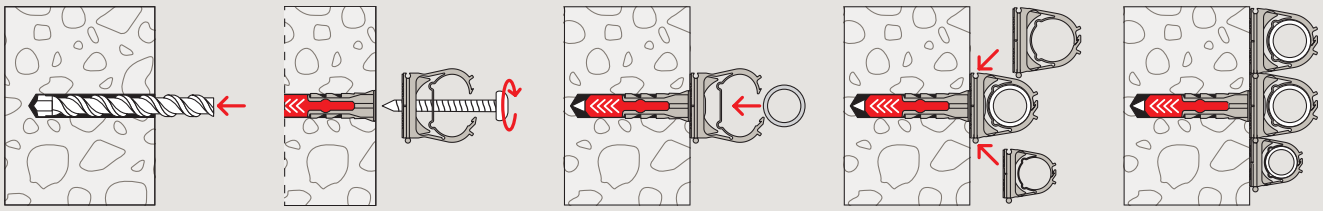

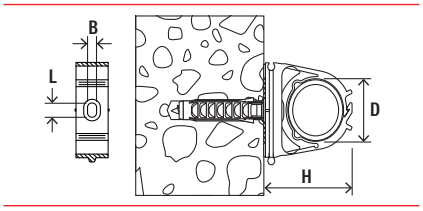


## Technical data

**Locking clip SCN**



SCN

| Item | Item no. | Pipe to wall distance [mm] | Clamping range D [mm] | Dimension of slot B x L [mm] | Height H [mm] | Sales unit [pcs] |
|---|---|---|---|---|---|---|
| **SCN 16** | **501261** | 11 | 16 | 4.5 x 4.5 | 30 | 100 |
| **SCN 20** | **501262** | 11 | 20 | 4.5 x 6.5 | 36 | 100 |
| **SCN 25** | **501263** | 11 | 25 | 4.5 x 6.5 | 42 | 50 |
| **SCN 32** | **501264** | 13 | 32 | 4.5 x 7.5 | 48 | 50 |
| **SCN 40** | **501265** | 13 | 40 | 4.5 x 7.5 | 60 | 25 |
| **SCN 50** | **501266** | 14 | 50 | 4.5 x 7.5 | 73 | 25 |

# Pipe clip RC

The convenient pipe fixing.





Fixing plastic insulating conduits



Fixing plastic insulating conduits



## Applications

- Flexible and rigid plastic insulating pipes

## Advantages

- The pipe clip RC can be used with pre-installed clip fixing SD, with Hammerfix N 6 or in 11 mm C-shaped profile-rails, and thus allows for a flexible and cost-effective installation.
- The 6 mm-long hole allows for the optimal alignment of the pipe fixing and ensures a more user-friendly installation.
- Two additional pipe clips can be added to the sides of a pre-fixed pipe clip. This saves assembly time and materials.
- The long-lasting nylon material is halogen- and silicone-free. It can be used all year round, including during a frost. This ensures a high level of safety.

## Certificates / Features

★★★★★
Nylon
Quality

## Building materials

**When using ClipFix SD:**

- Concrete
- Solid pumice block
- Solid sand-lime brick
- Natural stone with dense structure
- Solid brick

## Functioning

- Plastic insulation pipes are laid into the pipe clip. The pre-tensioning of the pipe clip holds the pipes securely.
- The pipe clip RC is adapted to be fixed with either clip fixing SD or Hammerfix N 6.
- Manually place the ClipFix plus SD directly into the drill hole. No additional screws are needed.
- The Hammerfix N is expanded when the nail is driven in, and holds by friction in the drill hole.
- Temperature resistance once installed from -20 °C to +80 °C.

## Installation RC

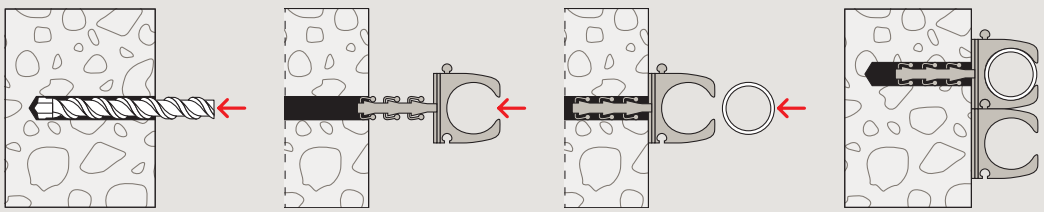

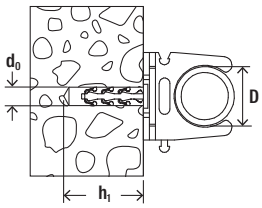


SF plus RC

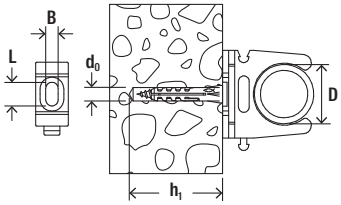


RC IEC

## Technical data

**Pipe clip RC**



SF plus RC RC IEC

| Item | Item no. | Drill diameter $d_0$ [mm] | Min. drill hole depth $h_1$ [mm] | Suitable for IEC | Clamping range D [mm] | Dimension of slot B x L [mm] | Sales unit [pcs] |
|---|---|---|---|---|---|---|---|
| **SF plus RC IEC 16** | **048191** | 6 | 35 | – | 15 - 16 | 6 x 8 | 100 |
| **SF plus RC IEC 19** | **553383** | 6 | 35 | – | 18 - 19 | 6 x 10 | 100 |
| **SF plus RC IEC 20** | **048193** | 6 | 35 | – | 20 - 21 | 6 x 10 | 100 |
| **SF plus RC IEC 25** | **048197** | 6 | 35 | – | 24 - 25 | 6 x 10 | 50 |
| **SF plus RC IEC 32** | **048198** | 6 | 35 | – | 31 - 32 | 6 x 10 | 25 |
| **RC IEC 12** | **058194** | – | – | 12 | 12 - 13 | 6 x 7 | 100 |
| **RC IEC 16** | **058120** | – | – | 16 | 15 - 16 | 6 x 8 | 100 |
| **RC IEC 19** | **553363** | – | – | 19 | 18 - 19 | 6 x 10 | 100 |
| **RC IEC 20** | **058122** | – | – | 20 | 20 - 21 | 6 x 10 | 100 |
| **RC IEC 25** | **058198** | – | – | 25 | 24 - 25 | 6 x 10 | 50 |
| **RC IEC 32** | **058199** | – | – | 32 | 31 - 32 | 6 x 10 | 40 |
| **RC IEC 40** | **058200** | – | – | 40 | 38 - 40 | 6 x 10 | 40 |
| **RC IEC 50** | **079194**[1)] | – | – | 50 | 50 - 51 | 6 x 10 | 20 |
| **RC IEC 63** | **079196**[1)] | – | – | 63 | 62 - 64 | 6 x 10 | 15 |

[1)] Does not include latching catches, therefore cannot be mounted side by side.

# Pipe clip FC

The flexible pipe clip for various diameters.



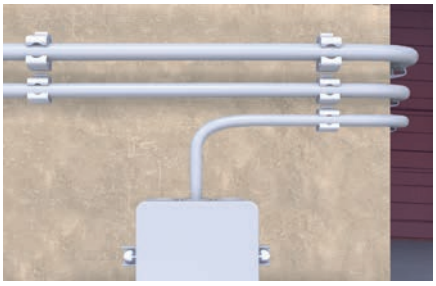

Cable fixing

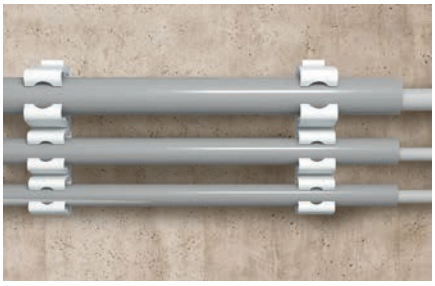

Fixing plastic insulating conduits

## Applications

- Electric cables
- Flexible and rigid plastic insulating pipes

## Advantages

- The flexible pipe clip socket ensures a secure hold for various cable and pipe diameters, and reduces the number of products required.
- The pipe clip FC can be installed with both N 5 Hammerfixes and 11 mm-C-shaped profile-rails, and thus offers great flexibility.
- Two additional pipe clips can be added to the sides of a pre-fixed clip clamp. This saves assembly time and materials.
- The long-lasting nylon material is halogen-free. It can be used all year round, including during a frost. This ensures a high level of safety.

## Certificates / Features

★★★★★
Nylon
Quality

## Building materials

**When using Hammerfix N:**

- Concrete
- Vertically perforated brick
- Hollow blocks made from lightweight concrete
- Perforated sand-lime brick
- Solid sand-lime brick
- Building brick
- Natural stone
- Aerated concrete
- Solid panel made from gypsum
- Solid brick made from lightweight concrete

## Functioning

- The clip clamp FC is adapted to suit the fixture using N 5 Hammerfixes.
- The Hammerfix N is expanded when the nail is driven in, and holds by friction in the drill hole.
- The cables or pipes are then laid in the clip clamp FC. The pre-tensioning of the clip clamp holds the cables or pipes securely.
- Temperature resistance once installed from -40 °C to +80 °C.

## Installation FC

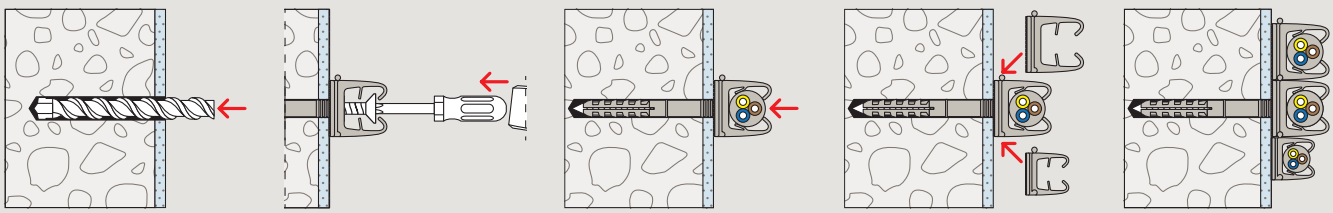

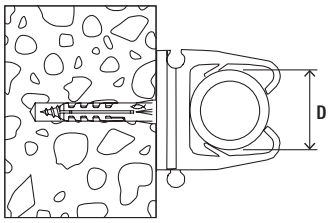


## Technical data

**Pipe clip FC**



FC

| Item | Item no. | Clamping range D [mm] | Sales unit [pcs] |
|---|---|---|---|
| **FC 6 - 9 GR** | **068060** | 6 - 9 | 100 |
| **FC 9 - 12 GR** | **068062** | 9 - 12 | 100 |
| **FC 12 - 16 GR** | **068064** | 12 - 16 | 50 |
| **FC 16 - 20 GR** | **068066** | 16 - 20 | 25 |

# Saddle clip SCH

The flexible cable clamp for various diameters.



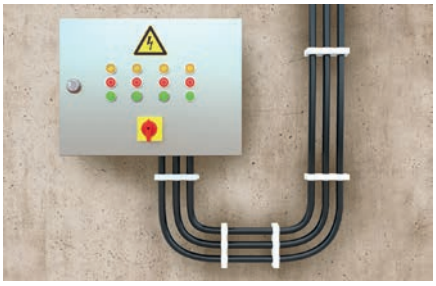

Fixing cable harnesses

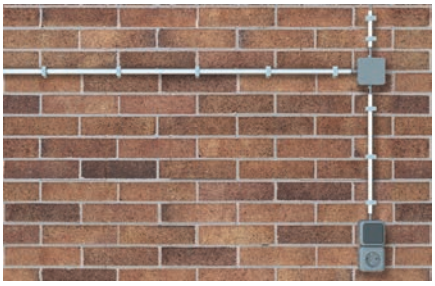

Plastic conduits

## Applications

- Electric cables
- Flexible and rigid plastic insulating pipes

## Advantages

- With its elastic spring tabs, the saddle clip SCH can bear different cable diameters. This increases flexibility and reduces the number of products required.
- Additional clips can be added to the sides of a pre-fixed clip. This saves installation time and materials.
- The long-lasting nylon material is halogen- and silicone-free. It can be used all year round, including during a frost. This ensures a high level of safety.

## Certificates / Features

★★★★★
Nylon
Quality

## Building materials

**When using Hammerfix N:**

- Concrete
- Vertically perforated brick
- Hollow blocks made from lightweight concrete
- Perforated sand-lime brick
- Solid sand-lime brick
- Building brick
- Natural stone
- Aerated concrete
- Solid panel made from gypsum
- Solid brick made from lightweight concrete

## Functioning

- The clamp SCH is adapted to suit the fixture using N 5 Hammerfixes.
- The Hammerfix N is expanded when the nail is driven in, and holds by friction in the drill hole.
- The cables or pipes are then laid in the clamp SCH and fixed by inserting the locking latch.
- The internal tabs adapt to fit various cable or pipe diameters.
- Temperature resistance once installed from -40 °C to +80 °C.

## Installation SCH

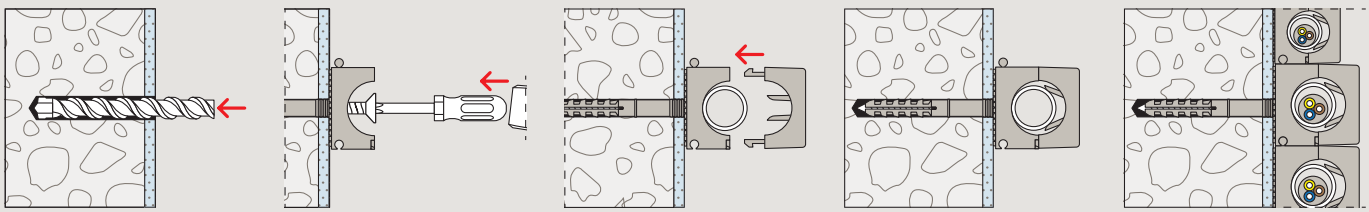

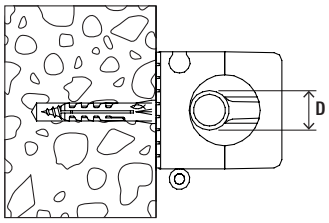


## Technical data

**Saddle clip SCH**



SCH grey



SCH transparent

| | grey RAL 7035 | Nylon transpa-rent | Clamping range | Dimension of insulated pipes | Sales unit |
|---|---|---|---|---|---|
| | | | D | | |
| Item | Item no. | Item no. | [mm] | | [pcs] |
| SCH 812 | 068012 | 060012 | 8 - 12 | 6 x 1 - 8 x 1 | 100 |
| SCH 1216 | 068016 | 060016 | 12 - 16 | 10 x 1 - 12 x 1 | 50 |
| SCH 1619 | 068019 | 069019 | 16 - 19 | 15 x 1 | 50 |
| SCH 1623 | 068023 | 060023 | 16 - 23 | 15 x 1 - 18 x 1 | 50 |
| SCH 2332 | 068032 | 060032 | 23 - 32 | 22 x 1 - 22 x 1.5 | 25 |
| SCH 3242 | – | 060042 | 32 - 42 | 22 x 1 - 22 x 1.5 | 25 |

# Fastening tie FF

Fixing tie for bundling and fixing of cables and pipes to the substrate.



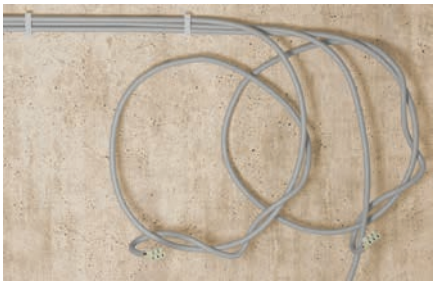

Electric cables



Plastic pipes

## Applications

- Electric cables
- Flexible and rigid electric tubes
- Steel conduits

## Advantages

- The socket of the FF fixing tie is fixed to the substrate with a screw or screw and plug.
- The fixing tie can be used to bundle and fix several cables or pipes.
- Adjustable diameter of the tie loop.
- The socket of the fixing tie can be adjusted through its slotted hole.

## Certificates / Features

★★★★★
Nylon
Quality

## Building materials

**When using 2-component DuoPower plug:**

- Concrete
- Solid brick
- Solid sand-lime brick
- Aerated concrete
- Vertically perforated brick
- Perforated sand-lime brick
- Plasterboard
- Gypsum plasterboard and gypsum fibreboards
- Hollow blocks made from lightweight concrete
- Cavity floor slabs made from bricks and concrete or similar
- Natural stone
- Chipboard
- Solid panel made from gypsum
- Solid brick made from lightweight concrete

## Functioning

- The socket of the fixing tie is fixed with the plug and screw suitable for the substrate.
- Recommended application temperature -20 °C to +60 °C.
- Temperature resistant when installed -40 °C to +80 °C.

## Installation FF

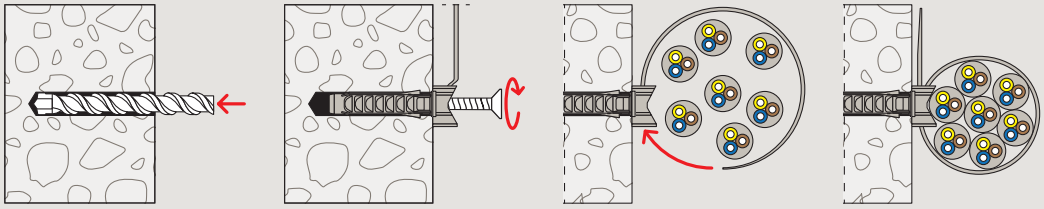

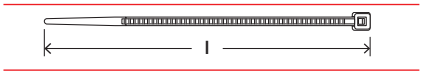


## Technical data

**Fastening tie FF**



FF

| | Item no. | Dimension fixing base [mm] | For cables and pipes from / to $d_{min}$ - $d_{max}$ [mm] | max. screw diameter [mm] | Sales unit [pcs] |
|---|---|---|---|---|---|
| **Item** | | | | | |
| **FF 8 - 32** | **519808** | 25 x 15 x 20 | 8 - 32 | 4.5 | 80 |
| **FF 16 - 63** | **519809** | 25 x 15 x 20 | 16 - 63 | 4.5 | 40 |

# ClipFix plus LS/ES/ZS

The user-friendly clip fixing for pipes and conduits.





Fixing flexible pipes

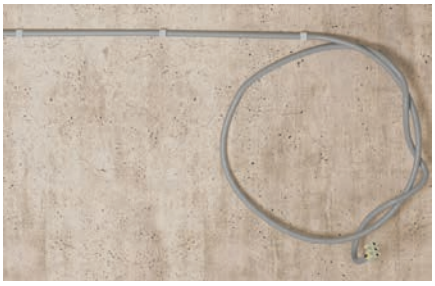

Cable fixing

## Applications

- Individual electric cables
- Cable bundles
- Flexible pipes
- Rigid plastic pipes

## Advantages

- The complete element combines anchor, screw and clamp. This saves materials, allows for one-handed installation, and reduces assembly time.
- The slimline geometry of the fixing element only protrudes slightly, thus saving space.
- The three different sizes of each of the cable strap LS, twin clamp ZS and single clamp ES cover a range of cable diameters, thus reducing storage.
- The long-lasting nylon material is flame resistant, halogen- and silicone-free, can be used all year round, including during a frost. This ensures a high level of safety.

## Certificates / Features

★★★★★
Nylon
Quality

## Building materials

- Concrete
- Solid pumice block
- Solid sand-lime brick
- Natural stone with dense structure
- Solid brick

## Functioning

- The clip fixing is set into the drill hole without the need for any additional screws and fixes the pipe directly to the base material.
- The clamping force of the locking catch allows the ClipFix to hold itself in the drill hole.
- Place the clasp of the cable strap LS into the drill hole so that it is level and the teeth grip.
- Recommended loads (required safety factor considered): cable strap LS up to 6 kg, twin clamp ZS and single clamp ES up to 11 kg.
- Temperature resistance once installed from -20 °C to +80 °C.
- Flammability material UL 94-V0.

## Installation LS/ES/ZS

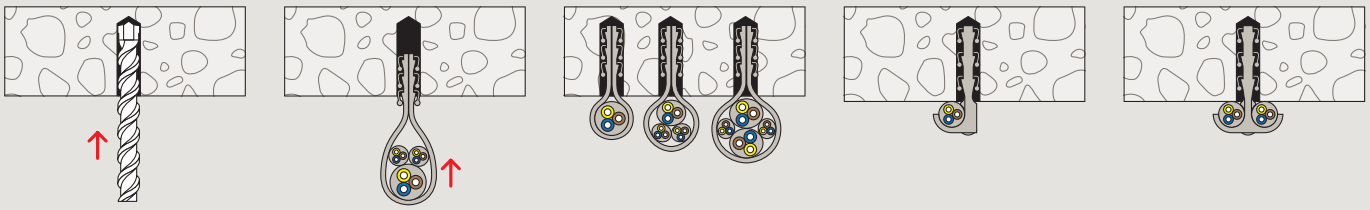

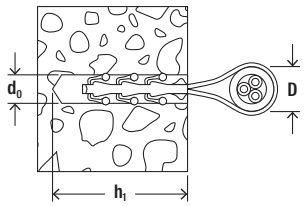


SF plus LS

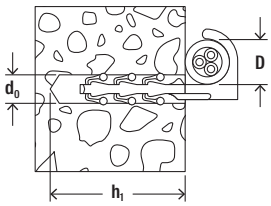


SF plus ES

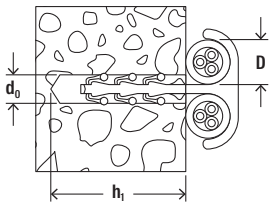


SF plus ZS

## Technical data

**ClipFix plus LS/ES/ZS**



SF plus LS SF plus ES SF plus ZS

| Item | Item no. | Min. drill hole depth $h_1$ [mm] | Clamping range D [mm] | Sales unit [pcs] |
|---|---|---|---|---|
| **SF plus LS 3/13** | **058155** | 35 | 3 - 13 | 100 |
| **SF plus LS 8/28** | **058156** | 50 | 8 - 28 | 100 |
| **SF plus LS 20/40** | **058157** | 50 | 20 - 40 | 100 |
| **SF plus ES 10** | **048151** | 40 | 3 - 12 | 100 |
| **SF plus ES 18** | **048152** | 40 | 10 - 25 | 100 |
| **SF plus ES 28** | **058183** | 40 | 15 - 31 | 100 |
| **SF plus ZS 10** | **058184** | 35 | 3 - 12 | 100 |
| **SF plus ZS 18** | **048161** | 40 | 10 - 25 | 100 |
| **SF plus ZS 28** | **048162** | 40 | 15 - 31 | 75 |

# ClipFix plus SD

The user-friendly clip fixing for cable ducts and cable clasps.



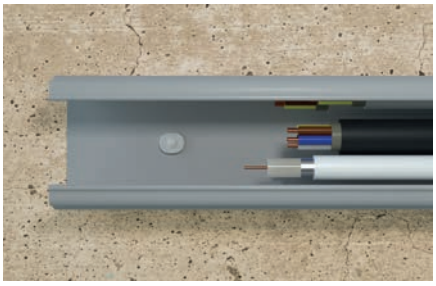

Fixing cable ducts



Fixing cable harnesses



## Applications

- Cable channels
- Cable clasps
- Installation base cable harness
- Flat building components

## Advantages

- The ClipFix plus SD combines anchor and screw. This saves on materials and makes it easier to affix cable ducts that are difficult to access without the need for additional tools.
- The simple clip fixing reduces installation time.
- The extended shank of the FS plus SD 40 allows bridging of non-bearing plaster layers, as well as the fixing of thicker attachments.
- The long-lasting nylon material is flame resistant, halogen- and silicone-free. It can be used all year round, including during a frost. This ensures a high level of safety.

## Certificates / Features

★★★★★
Nylon
Quality

## Building materials

- Concrete
- Solid pumice block
- Solid sand-lime brick
- Natural stone with dense structure
- Solid brick

## Functioning

- To fix, manually place the ClipFix plus SD directly into the drill hole. No additional screws are needed.
- The clamping force of the locking catch allows the ClipFix to hold itself in the drill hole.
- Recommended loads (required safety factor considered): clip fixing SD up to 11 kg.
- Temperature resistance once installed from -20 °C to +80 °C.
- Flammability material UL 94-V0.

## Installation SD

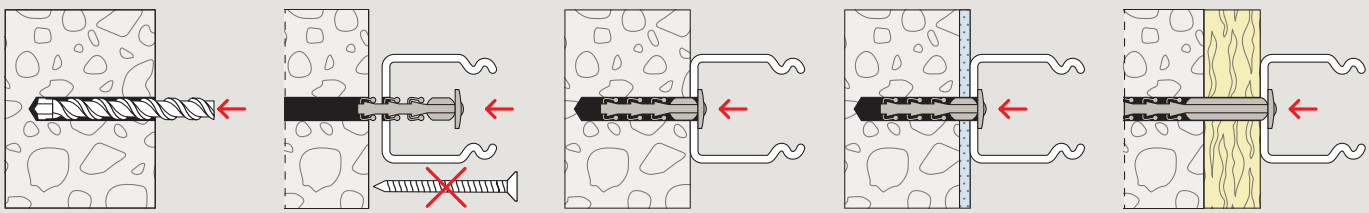

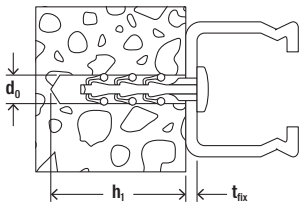


## Technical data

**ClipFix plus SD**



SF plus SD

| Item | Item no. | Drill diameter $d_0$ [mm] | Min. drill hole depth $h_1$ [mm] | Max. usable length $t_{fix}$ [mm] | Sales unit [pcs] |
|---|---|---|---|---|---|
| **SF plus SD 30** | **058178** | 6 | 35 | 4 | 200 |
| **SF plus SD 40** | **058179** | 6 | 35 | 15 | 100 |

# Cable clasp KB

The flat cable clasp for space-saving cable fixing.





Fixing cable harnesses

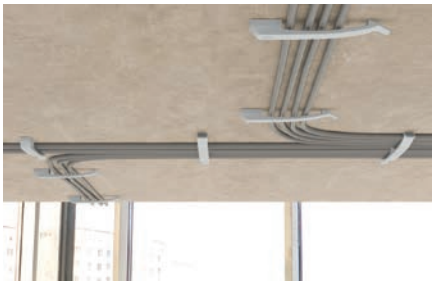

Fixing cable harnesses



## Applications

- Several individual cables in a small installation space
- Multiple single cables in false ceilings

## Advantages

- The flat design of the KB cable clasp allows for a space-saving cable fixing, and simplifies subsequent cable-laying.
- The combination of cable clasp KB and ClipFix SD allows for one-handed installation, thus enabling a flexible and economic installation.
- The long-lasting nylon material is halogen- and silicone-free. It can be used all year round, including during a frost. This ensures a high level of safety.

## Certificates / Features

★★★★★
Nylon
Quality

## Building materials

**When using ClipFix SD:**

- Concrete
- Solid pumice block
- Solid sand-lime brick
- Natural stone with dense structure
- Solid brick

## Functioning

- The cable clasp KB is adapted to suit the fixture with clip fixing SD or Hammerfix N6.
- Place the ClipFix plus SD directly into the drill hole by hand. No additional screws are needed.
- The Hammerfix N is expanded when the nail is driven in, and holds by friction in the drill hole.
- After installation, the cables are pulled under the clasp. Additional cables can be easily laid after installation too.
- Temperature resistance once installed from -20 °C to +80 °C.

## Installation KB

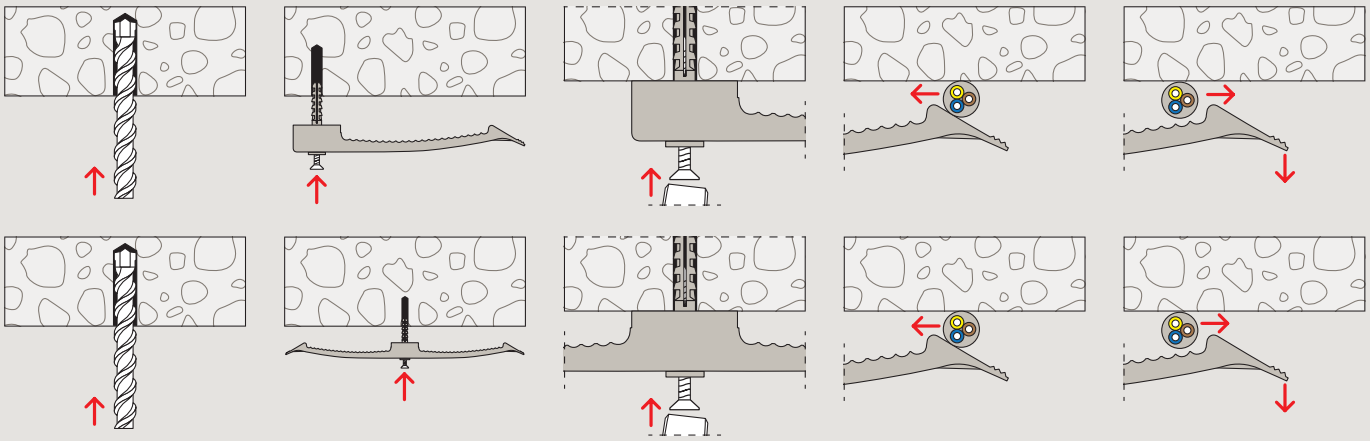

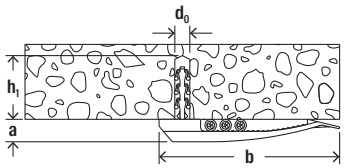


SF plus KB 8

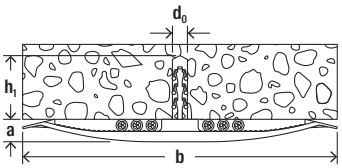


SF plus KB 16

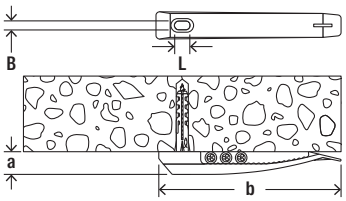


KB 8

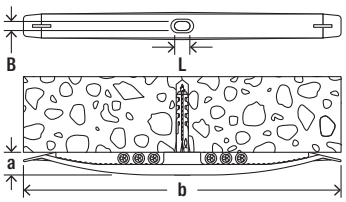


KB 16

## Technical data

**Cable clasp KB**



SF plus KB 8 | SF plus KB 16 | KB 8 | KB 16

| Item | Item no. | Dimensions a x b [mm] | Dimension of slot B x L [mm] | Max. number of ducts | Sales unit [pcs] |
|---|---|---|---|---|---|
| **SF plus KB 8** | **048171** | 15 x 133 | 6 x 10 | 8 ducts NYM 3 x 1,5 | 50 |
| **SF plus KB 16** | **048172** | 15 x 230 | 6 x 10 | 16 ducts NYM 3 x 1,5 | 25 |
| **KB 8** | **058135** | 15 x 133 | 6 x 10 | 8 ducts NYM 3 x 1,5 | 50 |
| **KB 16** | **058136** | 15 x 230 | 6 x 10 | 16 ducts NYM 3 x 1,5 | 50 |

# Cable harness SHA

The adaptable cable harness for fixing cable bundles.



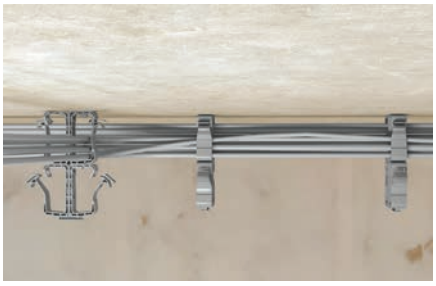

Fixing cable bundles

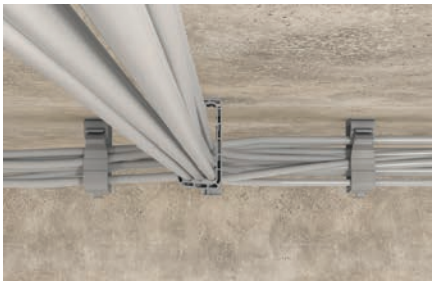

Fixing cable bundles



## Applications

- Electric cables, loose and bundled

## Advantages

- Simple bundling and economical laying of multiple electric cables.
- The seal of the cable harness SHA makes it easy to lay cables at a later date, thus ensuring high user-friendliness.
- Combining several SHA cable harnesses allows for a cost-effective fixing of cables to just one MS installation base.
- The MS installation base allows for various fixing options, and offers great flexibility for the installation.
- The long-lasting nylon material is halogen- and silicone-free, can be used all year round, including during a frost, and thus ensures a high level of safety.

## Certificates / Features

★★★★★
Nylon
Quality

## Building materials

**When using ClipFix SD:**

- Concrete
- Solid pumice block
- Solid sand-lime brick
- Natural stone with dense structure
- Solid brick

## Functioning

- Cable bundles can be laid in the cable harness SHA. The seal makes it easy to lay cables at a later date.
- The cable harness SHA can either be affixed with ClipFix plus, installation base MS or with plugs and screws.
- Several SHA cable harnesses can be combined below one another.
- The SHA cable harnesses can also be lined up adjacent to one another with the connection piece SHA KP.
- The maximum installation distance of 80 cm must not be exceeded.
- Temperature resistance once installed from -20 °C to +80 °C.

## Installation SHA

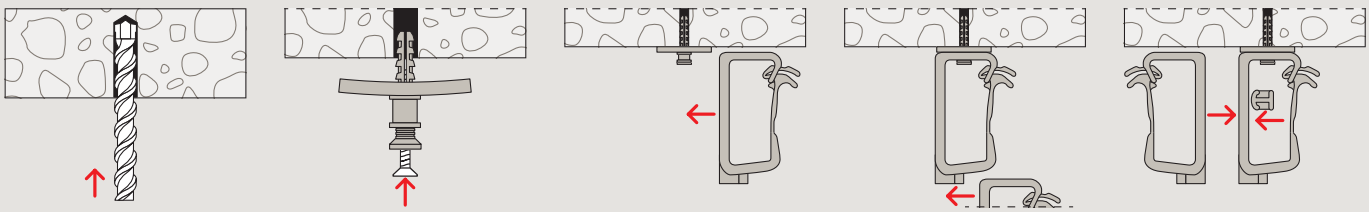

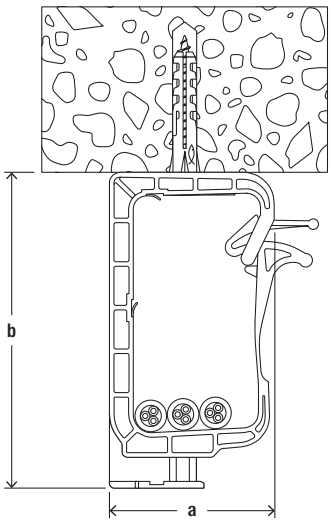


SHA

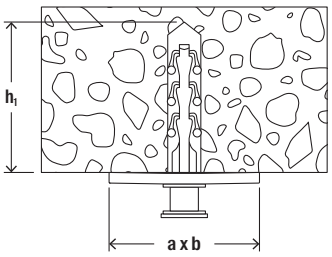


SF plus MS

## Technical data

**Cable harness SHA**



SHA



SHA MS



SF plus MS



SHA KP

| Item | Item no. | Min. drill hole depth $h_1$ [mm] | Dimensions a x b [mm] | Max. number of ducts | Sales unit [pcs] |
|---|---|---|---|---|---|
| **SHA 15** | **058139** | – | 93 x 49 | 15 ducts NYM 3 x 1,5 | 50 |
| **SHA 30** | **058140** | – | 128 x 59 | 30 ducts NYM 3 x 1,5 | 25 |
| **SHA MS** | **058141** | – | 41 x 27 | – | 50 |
| **SF plus MS** | **048181** | 35 | – | – | 50 |
| **SHA KP** | **058142** | – | – | – | 50 |

# Multi cable support metal SHA M

Metal multi-cable support with high mechanical resistance and approval.





Cable fixing to the ceiling



Cable fixing to the wall



## Applications

- Fixing of cables with circuit integrity maintenance.
- Installation of electrical cables above fire protection ceilings.

## Advantages

- The fischer metal multi cable support SHA M has a high mechanical strength and thus offers a long service life and safety in the event of fire.
- It is approved as a cable-specific variant for circuit integrity maintenance of electric cable systems in accordance with DIN 4102 Part 12.
- This makes it suitable for safe installation above fire protection ceilings.
- Depending on the version, 15, 30 or 70 cables can be fixed.
- The lock, which can be operated without tools, allows easy subsequent cable-laying and thus ensures a high degree of ease of installation.
- The multi cable support is variably suitable for wall and ceiling installation.
- Halogen-free and without fire load.

## Certificates / Features

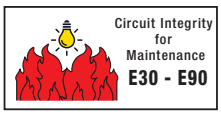


## Building materials

**Approved for fastening with nail anchor FNA II:**

- Concrete C12/15 to C50/60, cracked, for multiple fixings of non-structural applications

**Also suitable for:**

- Solid sand-lime brick
- Natural stone with dense structure
- Prestressed hollow-core concrete slabs

## Functioning

- The multi cable support is fixed to walls or ceilings with plugs and screws or metal anchors suitable for the substrate and application.

## Installation SHA M

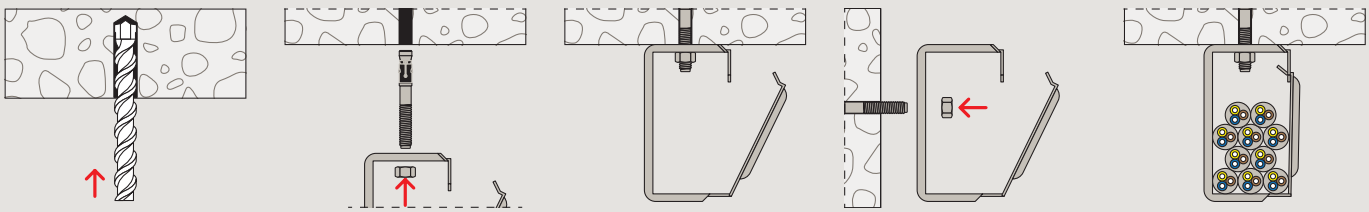

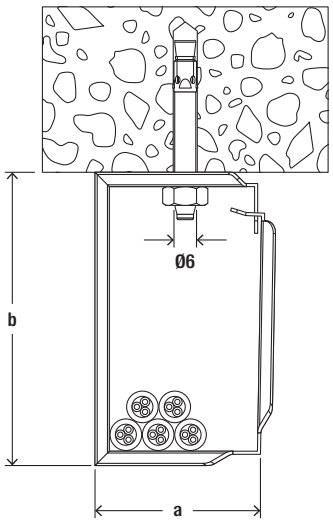


## Technical data

**Multi cable support metal SHA M**



SHA M

| Item | Item no. | Mounting pipe ø [mm] | Max. number of ducts | Sales unit [pcs] |
|---|---|---|---|---|
| **SHA M 15** | **544933** | 6 | 15 ducts NYM 3 x 1,5 | 50 |
| **SHA M 30** | **544934** | 6 | 30 ducts NYM 3 x 1,5 | 25 |
| **SHA M 70** | **544935** | 6 | 70 ducts NYM 3 x 1,5 | 10 |

# Wall slot clip FWSC

The quick tool-free cable fixing in wall slots.





Cable fixing in wall slots > 30 mm

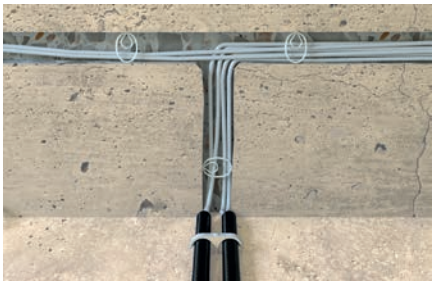

Cable fixing in wall slots < 55 mm

## Applications

- Fixing of cables in wall slots of 30 - 55 mm width.

## Advantages

- With the fischer FWSC wall slot clip, cables can be fixed quickly and without tools in wall slots 30 to 55 mm wide.
- This reduces installation time by up to 50%.
- The high expansion power of the wall slot clip guarantees a reliable fixing of the cables.
- Damage to the cables can be excluded due to the expansion principle.
- Thanks to its neutral colour, the wall slot clip does not shine through the plaster.
- The wall slot clip is made of halogen-free material.

## Building materials

- Concrete
- Masonry

## Versions

- POM, recyclable

## Functioning

- The cables to be fastened are inserted into the wall slot.
- By pressing together the wall slot clip is compressed and tensed to be ready for installation in the wall slot.
- The wall slot clip can be compressed in length or width as required and thus used for wall slots with a width of 30 to 55 mm.

## Installation FWSC

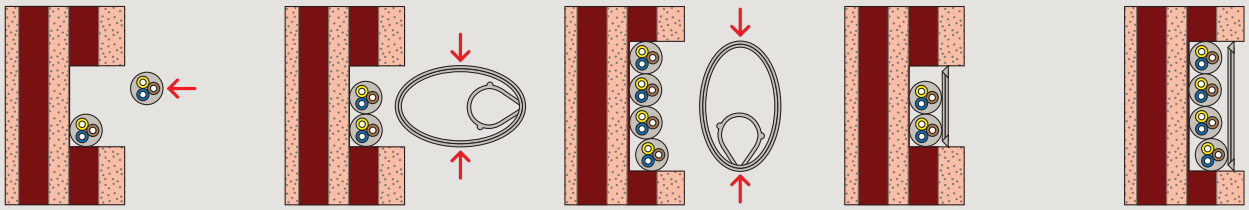

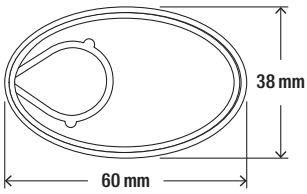


## Technical data

**Wall slot clip FWSC**



FWSC

| Item | Item no. | Max. slot width [mm] | Sales unit [pcs] |
|---|---|---|---|
| **FWSC 30 - 55** | **545792** | 55 | 50 |

# Nail disc NSB

The secure cable fixing in wall slots.





Cable fixing

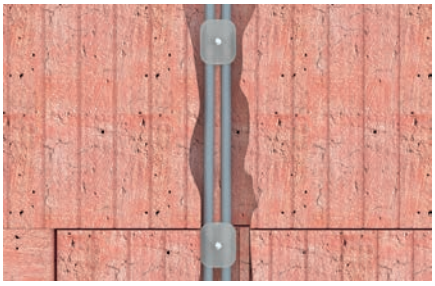

Cable fixing in slots



## Applications

- For fixing cables in wall slots

## Advantages

- The nail disc NSB allows for use in two slot widths.
- The vaulted structure of the nail disc ensures an optimal contact pressure and, as such, for a secure hold.
- The flat nail disc only protrudes slightly, and can thus be easily plastered over.
- The nail disc NSB is made from high-strength polypropylene. The nail is made from hardened, galvanised steel. The tried and tested material combination for in-wall installation.

## Building materials

- Vertically perforated brick
- Pumice
- Lightweight aggregate concrete
- Aerated concrete
- Hardboard
- Wood
- Chipboard
- Plywood
- Solid panel made from gypsum

## Functioning

- Pull in cable.
- Align the nail disc with either dimensions 27 mm or 34 mm, depending on the slot width, and hit the nail in with a hammer.
- The cables are fixed in the wall slots by the curved washer.

## Installation NSB

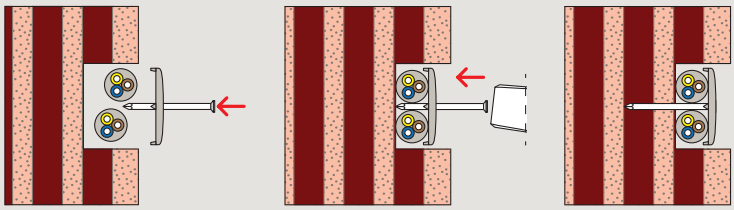

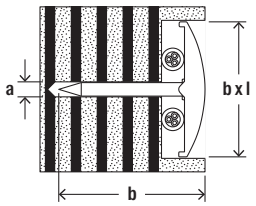


## Technical data

**Nail disc NSB**



NSB

| Item | Item no. | Dimension of nail a x b [mm] | Dimension of disc b x l [mm] | Sales unit [pcs] |
|---|---|---|---|---|
| **NSB 2/40** | **048308** | 2 x 40 | 27 x 34 | 200 |
| **NSB 2/50** | **048309** | 2 x 50 | 27 x 34 | 150 |
| **NSB 2/60** | **048310** | 2 x 60 | 27 x 34 | 100 |
| **NSB 3/40** | **048311** | 3 x 40 | 27 x 34 | 150 |
| **NSB 3/50** | **048312** | 3 x 50 | 27 x 34 | 150 |
| **NSB 3/60** | **048313** | 3 x 60 | 27 x 34 | 100 |

# Nail clip NS/MNS

The fast fixing for electric cables.





Cable fixing



Cable fixing



## Applications

- To fix single electric cables with varying diameters

## Advantages

- The nail clip features a pre-assembled zinc-plated nail, allowing for a fast fixing, thus reducing assembly time.
- The small space required for fixing simplifies installation in narrow spaces.
- The nail clip MNS covers cable diameters from 4 mm to 14 mm with just 3 sizes.

## Building materials

- Hardboard
- Wood
- Aerated concrete
- Chipboard
- Plywood
- Solid gypsum panels and other plastered substrates

## Functioning

- Position the nail clip with the laid cable. Hammer in the pre-assembled nail with a hammer.

## Installation NS, MNS

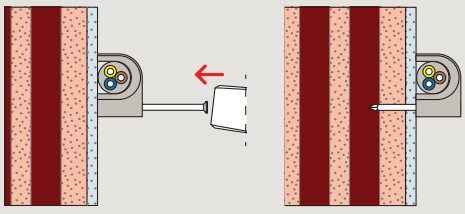

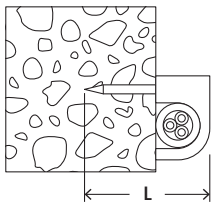


## Technical data

**Nail clip NS/MNS**

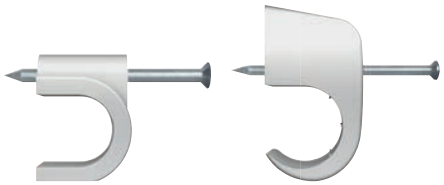

NS MNS

| Item | Item no. | For cable [mm] | Length of nail L [mm] | Sales unit [pcs] |
|---|---|---|---|---|
| **NS 7** | **058173** | 7 | 25 | 100 |
| **NS 8** | **058174** | 8 | 25 | 100 |
| **NS 9** | **058175** | 9 | 25 | 100 |
| **NS 10** | **058176** | 10 | 30 | 100 |
| **NS 12** | **058177** | 12 | 35 | 100 |
| **MNS 4-7** | **094673** | 4 - 7 | 25 | 100 |
| **MNS 7-11** | **094674** | 7 - 11 | 25 | 100 |
| **MNS 10-14** | **094675** | 10 - 14 | 30 | 100 |

# Spacer pipe clamp AM/

The installation-friendly metal spacing disc for cables and pipes.



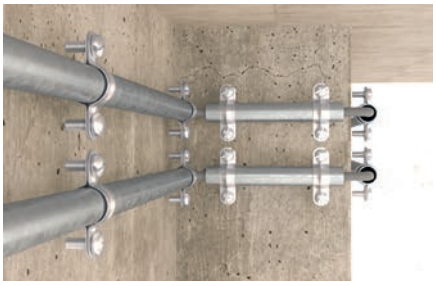

Fixing steel armoured conduits



Fixing conduits

## Applications

- Steel conduits
- Electric cables
- Copper and metal pipes

## Advantages

- The fast-locking latch ensures easy opening and closing without completely removing the screw, and allows for a simple and fast installation.
- The pre-fitted combination screw with conventional slotted or recessed screw head allows for the use of different screwdrivers, thus allowing for a simple installation.

## Building materials

**When using nail anchor FNA II:**
- Concrete
- Solid sand-lime brick
- Natural stone with dense structure
- Pre-stressed concrete hollow slabs

**When using Hammerfix N:**
- Concrete
- Solid sand-lime brick
- Building brick
- Natural stone
- Solid brick made from lightweight concrete

## Functioning

- The spacer pipe clamp AM with M6 thread can be secured with the fischer nail anchor FNA II 6x30 M6x41, stud screw STST 6x60 and STST 6x80, or Hammerfix N 6x40/10 M6 as desired.

## Installation AM

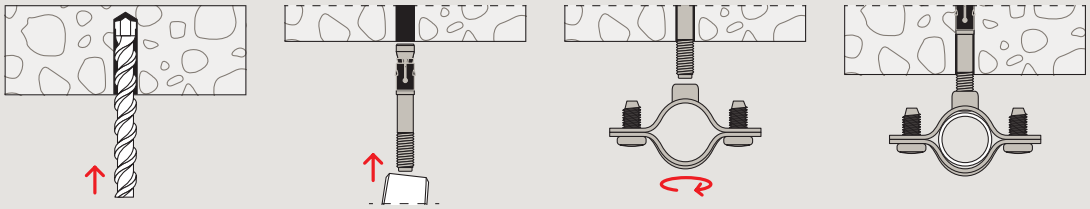

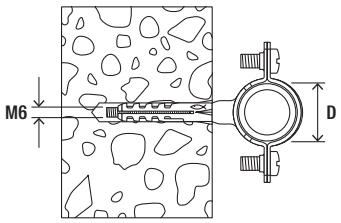


## Technical data

**Spacer pipe clamp AM**



AM

| Item | Item no. | Dimension IEC | Clamping range D [mm] | Sales unit [pcs] |
|---|---|---|---|---|
| **AM 8** | **060185** | – | 8 - 10 | 50 |
| **AM 10** | **060186** | – | 10 - 11 | 50 |
| **AM 12** | **060187** | 12 | 12 - 13 | 50 |
| **AM 14** | **060188** | – | 14 - 15 | 50 |
| **AM 16** | **060189** | 16 | 15 - 17 | 50 |
| **AM 18** | **060190** | – | 18 - 19 | 50 |
| **AM 20** | **060191** | 20 | 20 - 21 | 50 |
| **AM 22** | **060192** | – | 22 - 23 | 50 |
| **AM 24** | **060193** | – | 24 - 25 | 50 |
| **AM 26** | **060194** | 25 | 26 - 27 | 50 |
| **AM 28** | **060195** | – | 28 - 29 | 50 |
| **AM 32** | **060209** | 32 | 32 - 33 | 25 |
| **AM 30** | **060196** | – | 30 - 31 | 50 |
| **AM 34** | **060210** | – | 34 - 35 | 25 |
| **AM 37** | **060211** | 37 | 37 - 39 | 20 |
| **AM 40** | **090849** | 40 | 40 - 42 | 15 |
| **AM 50** | **090850** | 50 | 50 - 52 | 10 |
| **AM 63** | **090851** | 63 | 63 - 65 | 10 |

# Conduit clip BSM/BSMD/BSMZ

The flat metal clip for cables and pipes.





Fixing armoured conduits



## Applications

- Electrical conduits
- Flexible and rigid plastic insulating pipes
- Steel conduits

## Advantages

- The open conduit clip BSM is ideal for the post-installation fixing of conduits.
- The conduit clip allows for a direct fixing with impact nails and is, therefore, quick and easy to install.
- Two conduits or pipes can be fixed with just one fixing point with the twin clamp BSMZ.

## Building materials

**When using impact nail ED:**

- Concrete

## Functioning

- Depending on your requirements, use a conduit clip with 1 or 2 fixing points, or a twin clamp.
- The conduits or pipes are laid in the conduit clip. Assembling the clip fixes the conduits / pipes.
- Our recommendation for fixtures on concrete: Impact nail.

## Installation BSM

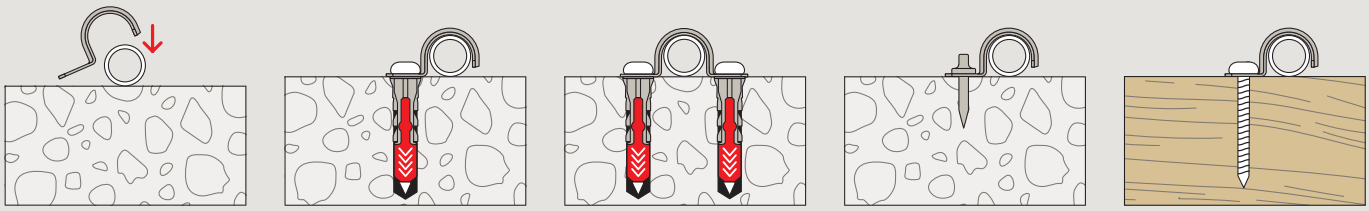

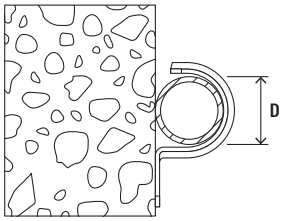


BSM

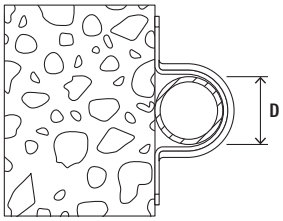


BSMD

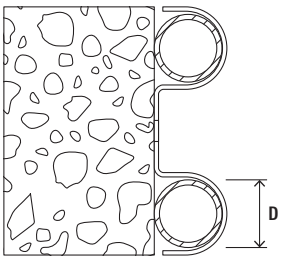


BSMZ

## Technical data

**Conduit clip BSM**



BSM BSMD BSMZ

| Item | BSM Item no. | BSMD Item no. | BSMZ Item no. | Dimension IEC | Clamping range D [mm] | Sales unit [pcs] |
|---|---|---|---|---|---|---|
| 6 | 015014 | 015066 | – | – | 6 | 100 |
| 8 | 015015 | – | – | – | 8 | 100 |
| 8 | – | 015067 | – | – | 8 | 50 |
| 10 | 015016 | – | – | – | 10 | 100 |
| 10 | – | 015068 | – | – | 10 | 50 |
| 12 | 015017 | 015069 | – | – | 12 | 50 |
| 14 | 015018 | 015070 | – | – | 14 | 50 |
| 15 | 015093 | – | – | 15 | 15 | 50 |
| 16 | 060149 | 060169 | – | 16 | 16 | 50 |
| 18 | 060150 | 060170 | – | – | 18 | 50 |
| 20 | 060151 | 060171 | 079535 | 20 | 20 | 50 |
| 22 | 060152 | 060172 | – | – | 22 | 50 |
| 24 | 060153 | 015075 | 079536 | – | 24 | 50 |
| 25 | 090839 | 090844 | – | 25 | 25 | 50 |
| 26 | 096958 | 015076 | – | – | 26 | 50 |
| 28 | 060155 | – | 079537 | – | 28 | 50 |
| 28 | – | 060175 | – | – | 28 | 25 |
| 30 | 015019 | – | – | – | 30 | 50 |
| 30 | – | 015078 | – | – | 30 | 25 |
| 32 | 090840 | – | – | 32 | 32 | 50 |
| 32 | – | 090845 | – | 32 | 32 | 25 |
| 37 | 060158 | 060178 | – | – | 37 | 25 |
| 40 | 090841 | 090846 | – | 40 | 40 | 25 |
| 42 | 015021 | – | – | – | 42 | 25 |
| 42 | – | 015081 | – | – | 42 | 20 |
| 47 | – | 015082 | – | – | 47 | 20 |
| 50 | 090842 | – | – | 50 | 50 | 20 |
| 50 | – | 090847 | – | 50 | 50 | 15 |
| 63 | 090843 | – | – | 63 | 63 | 15 |
| 63 | – | 090848 | – | 63 | 63 | 10 |

# Textile web strapping GWB

Textile web strapping GWB for cost-effective, easy pipe fixings





Flexible and rigid plastic insulation pipes

## Applications

- Pipe fixing to the substrate e.g. to the raw floor.

## Advantages

- Pipe fixing using textile tape allows cheap and simple installation.
- The textile tape roll allows the correct tape length to be chosen to suit the diameter in question.
- Hangings with textile tape are a fast solution for temporary fixings.

## Building materials

**When using impact nail ED:**

- Concrete

## Installation GWB

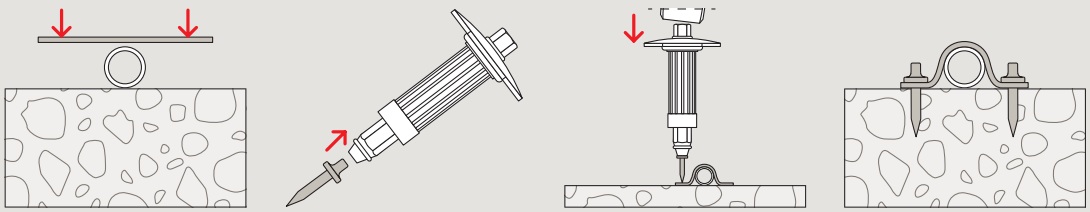

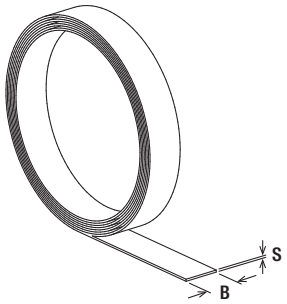


## Technical data

**Textile web strapping GWB**



GWB

| Item | Item no. | Width B [mm] | Thickness S [mm] | Sales unit [pcs] |
|---|---|---|---|---|
| **GWB** | **020959** | 15 | 1.1 | 10 |

# Perforated steel banding LBV/LBK

Perforated steel banding LBV/LBK for the fast fixing of pipelines





Plastic pipes



## Applications

- Steel tape with stamped holes for simple installation of pipes on the substrate, e. g. on unfinished floor.
- Available as zinc-plated LBV or plastic-covered LBK.
- The fischer nail anchor FNA II is suitable for ceiling fixing in concrete.
- Use fischer thread hanger RAH for fastening to threaded rods.
- For use in dry interior areas.

## Advantages

- The perforated tape‘s material thicknesses and plastic covering allow the tapes to be easily cut to size using metal shears.
- The perforated tape‘s hole geometry enables concrete fixing using the fischer impact nail ED.

## Building materials

**When using impact nail ED:**

- Concrete

## Installation LBV, LBK

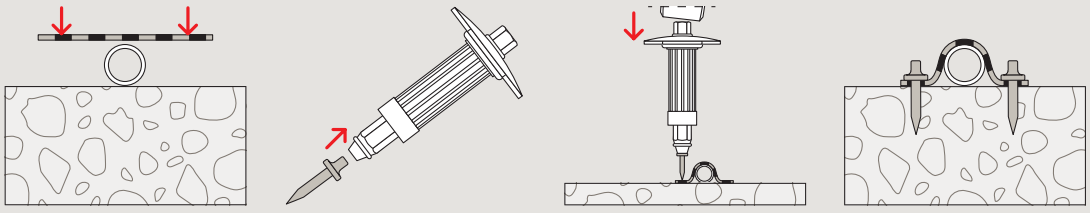

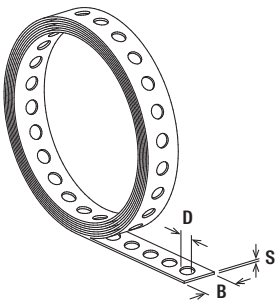


## Technical data

**Perforated steel banding LBV/LBK**



LBV



LBK

| Item | Item no. | Total length [mm] | Width B [mm] | Thickness S [mm] | Hole-ø D [mm] | Sales unit [pcs] |
|---|---|---|---|---|---|---|
| **LBV 12** | **079549** | 10,000 | 12 | 0.8 | 5.0 | 10 |
| **LBV 17** | **079550** | 10,000 | 17 | 0.8 | 6.5 | 10 |
| **LBV 25** | **079551** | 10,000 | 25 | 0.9 | 8.5 | 8 |
| **LBK 14** | **079553** | 10,000 | 14 | 2.6 | 5.0 | 10 |
| **LBK 19** | **079554** | 10,000 | 19 | 2.4 | 6.5 | 8 |
| **LBK 27** | **079555** | 10,000 | 27 | 2.4 | 8.5 | 5 |
| **LBW 17** | **507435** | 10,000 | 17 | 0.8 | 6.5 | 10 |

# Impact nail ED

Fixing in concrete without pre-drilling.





Fixing armoured conduits



Fixing perforated tapes

## Applications

- Conduit clips such as BSM, BSMD, BSMZ
- Perforated band such as LBK, LBV

## Advantages

- The stable impact nail ED can be set in concrete with the impact nail setting tool SZE without pre-drilling. This allows for a fast installation.
- The setting tool SZE impact protection provides the best protection for your hand, thus ensuring a safe installation.

## Building materials

- Concrete

## Functioning

- The impact nail ED is set in the setting tool SZE.
- The bracket in the setting tool holds the nail securely in place during the installation procedure.
- Pre-positioning of the element to be fixed.
- The nail can be hammered through the fixing element directly into the concrete.

## Installation ED

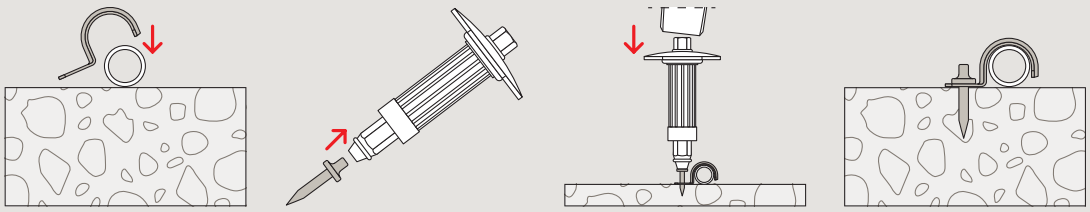

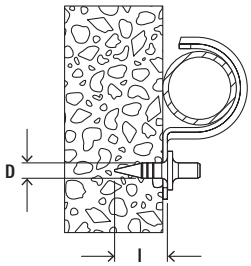


## Technical data

**Impact nail ED**



ED

| Item | Item no. | Diameter d [mm] | Sales unit [pcs] |
|---|---|---|---|
| **ED 15** | **048212** | 4.0 | 200 |
| **ED 18** | **079815** | 4.0 | 200 |
| **ED 22** | **014570** | 4.0 | 200 |

## Accessories Impact nail ED

**Accessories Impact nail ED**



SZE Toolset for SZE

| Item | Item no. | | Sales unit [pcs] |
|---|---|---|---|
| **SZE** | **552149** | | 1 |
| **Toolset for SZE** | **552150** | | 3 |

# Cable tie BN/UBN/GBN

For the simple bundling of cables and pipes.



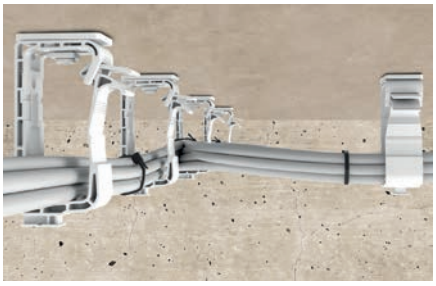

Bundling electric cables

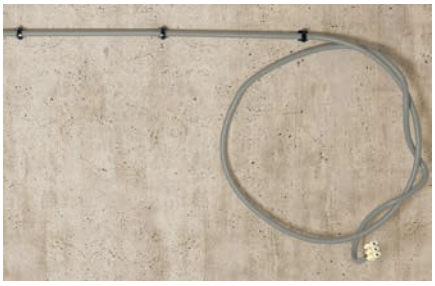

Electric cables

## Applications

**For bundling of:**
- Electric cables
- Flexible and rigid plastic insulating pipes
- Steel conduits

## Advantages

- The long-lasting nylon material is halogen- and silicone-free.
- The cable tie UBN (black) is made from UV-stabilised material.

## Certificates / Features

★★★★★
Nylon
Quality

## Functioning

- Lie the cable tie around the object to be fixed, and pull the band through the head of the cable tie. The cable tie can no longer be opened due to the latching of the tab in the teeth.
- Temperature resistance once installed from -10 °C to +85 °C.
- Recommended installation temperature from -10 °C to +85 °C.
- Flammability material UL 94-V2.

## Installation BN, UBN

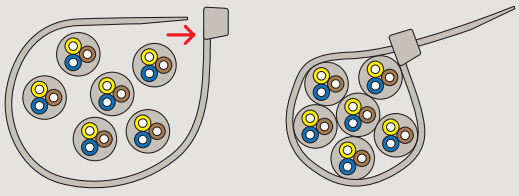

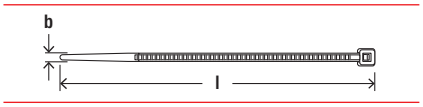


## Technical data

**Cable tie BN/UBN**



BN UBN GBN

| Item | transpa-rent<br>Item no. | black<br>Item no. | green<br>Item no. | Dimensions<br>b x l<br>[mm] | Sales unit<br>[pcs] |
|---|---|---|---|---|---|
| BN/UBN/GBN 2,5 x 100 | 087478 | 087488 | 543924 | 2.5 x 100 | 100 |
| BN/UBN 2,5 x 120 | 087479 | 087489 | – | 2.5 x 120 | 100 |
| GBN 2.5 x 150 | – | – | 543925 | 2.5 x 150 | 100 |
| BN/UBN 2,5 x 160 | 037489 | 069363 | – | 2.5 x 160 | 100 |
| BN/UBN/GBN 2,5 x 200 | 087480 | 087490 | 543926 | 2.5 x 200 | 100 |
| BN/UBN/GBN 3,6 x 150 | 087481 | 087491 | 543927 | 3.6 x 150 | 100 |
| BN/UBN 3,6 x 200 | 019802 | 037573 | – | 3.6 x 200 | 100 |
| BN/UBN 3,6 x 300 | 037490 | 069364 | – | 3.6 x 300 | 100 |
| BN/UBN 4,6 x 160 | 037501 | 069365 | – | 4.6 x 160 | 100 |
| BN/UBN 4,6 x 190 | 037581 | 069366 | – | 4.6 x 190 | 100 |
| BN/UBN/GBN 4,6 x 200 | 087484 | 087494 | 543928 | 4.6 x 200 | 100 |
| BN/UBN 4,8 x 250 | 037582 | 069367 | – | 4.8 x 250 | 100 |
| BN/UBN 4,8 x 350 | 037653 | 069368 | – | 4.8 x 350 | 100 |
| BN/UBN 4,8 x 370 | 037583 | 069369 | – | 4.8 x 370 | 100 |
| BN/UBN 4,8 x 430 | 037708 | 069370 | – | 4.8 x 430 | 100 |
| BN/UBN/GBN 4,8 x 280 | 087485 | 087495 | 543929 | 4.8 x 280 | 100 |
| BN/UBN 7,6 x 200 | 037945 | 069372 | – | 7.6 x 200 | 100 |
| BN/UBN 7,8 x 300 | 037949 | 069373 | – | 7.6 x 300 | 100 |
| BN/UBN 7,6 x 350 | 087487 | 087497 | – | 7.6 x 350 | 100 |
| BN/UBN 7,6 x 450 | 037996 | 069374 | – | 7.6 x 450 | 100 |
| BN/UBN 7,6 x 550 | 037997 | 069375 | – | 7.6 x 550 | 100 |
| BN/UBN 8,8 x 760 | 037998 | 069376 | – | 8.8 x 760 | 100 |
| BN/UBN 8,8 x 810 | 038000 | 069377 | – | 8.8 x 810 | 100 |
| BN/UBN 8,8 x 1168 | 038002 | 069379 | – | 8.8 x 1168 | 100 |

# Cable tie plug FCTP

The universal fixing point for cable ties.





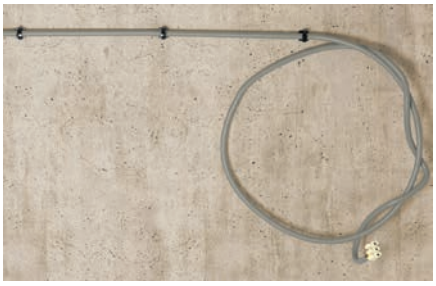

Electric cables



Flexible and rigid plastic pipes

## Applications

- Universal fixing point for fixing of cables and pipes using cable ties

## Advantages

- The FCTP cable tie plug combines the function of a plug and an eyelet to which cable ties up to 9.5 mm width can be attached (e.g. fischer BN or UBN).
- It offers a universal fixing point to which various cables and pipes can be attached.
- Installation is simple and time-saving by driving the plug into the drill hole.
- The lamellas of the plug ensure a secure hold in the building material and thus fix the cable tie in the intended position.

## Building materials

- Concrete
- Solid brick
- Solid sand-lime brick

## Versions

- Nylon, halogen-free

## Functioning

- The cable tie plug can be hammer set.
- A cable tie is inserted through the eyelet and the object to be fastened is fixed in the intended position.
- The eyelet with a width of 9.5 mm and a height of 3 mm is suitable for all fischer cable ties.

## Installation FTCP

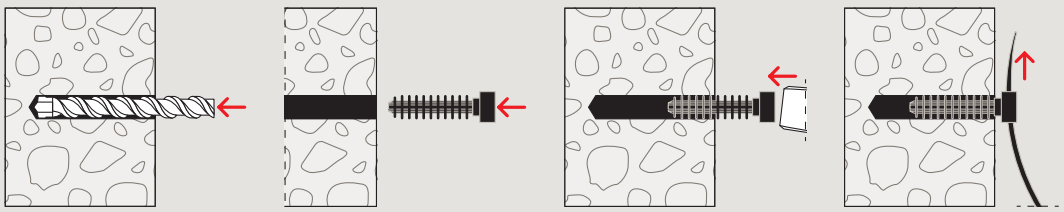

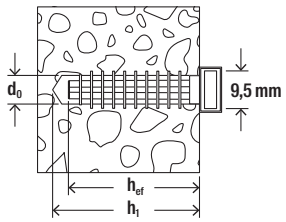


## Technical data

**Cable tie plug FCTP**



FCTP-W FCTP-B

| Item | Item no. | Drill diameter $d_0$ [mm] | Min. drill hole depth $h_1$ [mm] | Anchorage depth $h_{ef}$ [mm] | Total length l [mm] | Sales unit [pcs] |
|---|---|---|---|---|---|---|
| **FCTP-W** | **545786** | 8 | 40 | 35 | 45 | 100 |
| **FCTP-B** | **545787** | 8 | 40 | 35 | 45 | 100 |

# Wireclip WIC

Infinitely variable fixing of wire suspensions.





Suspension of signs




Suspensions for trade show exhibits

## Applications

**For suspension of:**

- Lighting strips
- Cable trays
- Ventilation ducts
- Pipes
- Signs
- Chilled ceilings

## Advantages

- The simple system guarantees ease of use.
- The Wireclip's simple closing mechanism means that no tools are needed. This allows for a cost-effective installation.
- The reclosable Wireclips make it possible to adjust the length at any time. This guarantees the greatest flexibility.

## Functioning

- Loops are formed from the wire, which can be threaded through the wireclip. This allows objects to be hung. The wireclips can be adjusted at any time.
- The FNA II 6x25 OE is suitable for fixing the wire.

Note:

- Do not apply paint or any other coating.
- Do not apply lubricant.
- Do not use for lifting loads.
- Remove damaged wire ends using the wire cutter WIZ prior to introducing wires into the wire clip.

## Installation WIC



## Technical data

**Wireclip WIC**



WIC 2



WIC 3




WIC 4

| Item | Item no. | Wire-ø [mm] | Sales unit [pcs] |
|---|---|---|---|
| **WIC 2 VE20** | **044559** | 2,0 - 2,5 | 20 |
| **WIC 2 VE100** | **044560** | 2,0 - 2,5 | 100 |
| **WIC 3 VE20** | **044561** | 2.5 - 3.5 | 20 |
| **WIC 4 VE50** | **044564** | 3.0 - 4.5 | 50 |

## Accessories Wireclip WIC

**Accessories Wireclip WIC**



WIS



WIZ

| Item | Item no. | Cable length [m] | Wire-ø [mm] | Sales unit [pcs] |
|---|---|---|---|---|
| **WIS 2/1** | **045956** | 1 | 2.0 | 10 |
| **WIS 2/2** | **045957** | 2 | 2.0 | 10 |
| **WIS 2/3** | **045958** | 3 | 2.0 | 10 |
| **WIS 2/5** | **045959** | 5 | 2.0 | 10 |
| **WI Ø 2 mm** | **044565**[1)] | 200 | 2.0 | 1 |
| **WIZ** | **044721** | – | – | 1 |

[1)] On a roll.



# 15
# Sanitary fixings


| | | |
|---|---|---|
| Sanitary fixings for board materials | 536 |  |
| Ceramic fixings | 538 |  |
| Wash basin and urinal fixings | 541 |  |
| Wash basin fixing WST II | 544 |  |

# Sanitary fixings for board materials

Complete fixing sets for wash basins and urinals in board building materials and plumbing walls.





Urinals



Wash basins

## Applications

- Wash basins
- Urinals

## Advantages

- With their special geometries, KM and WDP are the specialists for fixings in plumbing and hollow walls.
- The wide transition beams of the KM and the large base plate of the WDP ensure a good load distribution, thus allowing for a high load-bearing capacity.

## Building materials

- Gypsum plasterboard and gypsum fibreboards
- Chipboard

## Functioning

- KM is suitable for push-through installation.
- When placed in the drill hole, the wide transition beam of the KM independently swings open behind the board.
- WDP is set into the plumbing walls during wall installation.

## Installation WDP

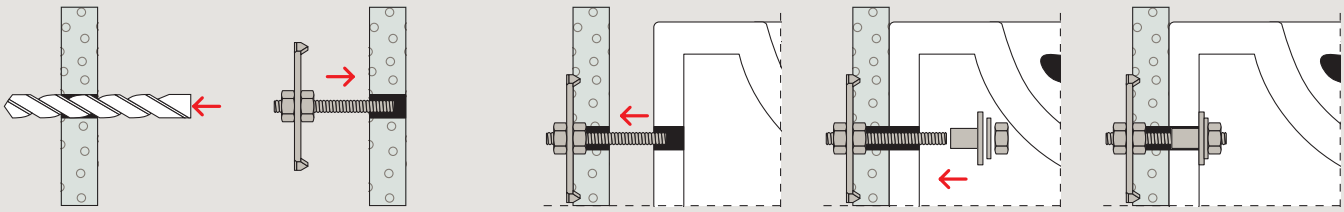

## Installation KM

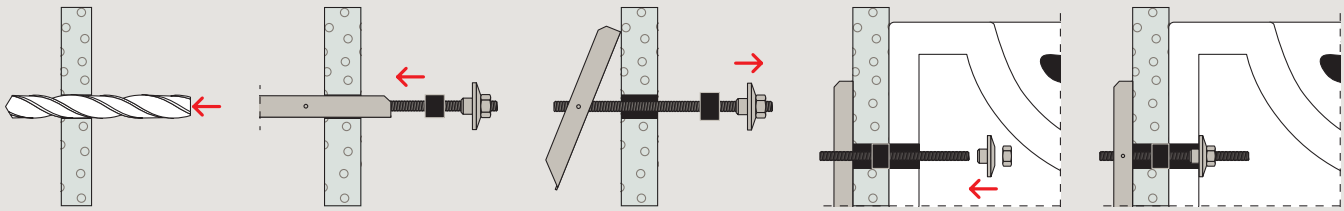

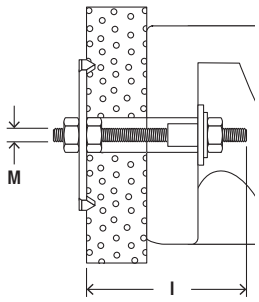


## Wash basin and urinal fixing WDP



WDP

| Item | Item no. | Contents | Sales unit [pcs] |
|---|---|---|---|
| **WDP 10 x 170** | **014320** | 2 Threaded rods M10 x 170 with base plate 60x60x3,<br>2 flanged bushes BDH M10,<br>2 hexagon nuts M10 zinc-plated | 10 |

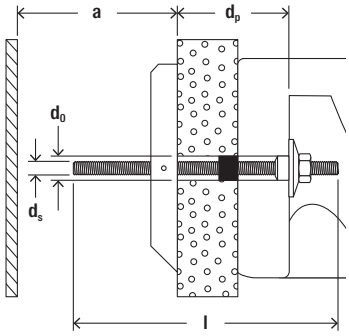




## Gravity toggle KM 10

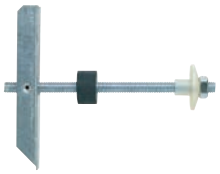

KM 10

| Item | Item no. | Drill diameter $d_0$ [mm] | Anchor length l [mm] | Min. cavity depth a [mm] | Max. panel thickness $d_p$ [mm] | Screw dimension $d_s$ x $l_s$ [mm] | Sales unit [pcs] |
|---|---|---|---|---|---|---|---|
| **KM 10** | **050326** | 30 | 180 | 140 | 90 | M10 x 180 | 25 |

# Ceramic fixings

Complete fixing sets for free-standing toilets and bidets





Free-standing toilets



Bidets

## Applications

- Free-standing toilets
- Bidets
- Ceramic shelves
- Mirrors

## Advantages

- Complete fixing sets including brass screws allow for quick and easy installation.
- A pronounced rim prevents contact between the screw and ceramics, thus ensuring nothing gets damaged during fixing.
- The WB5N's assembly bracket with predrilled rows of holes allows for a flexible fixing with two directions.
- The WCN is also suitable for fixing ceramic shelves and mirrors, and can thus be used for a wide range of applications.

## Certificates

★★★★★
Nylon
Quality

## Building materials

- Concrete
- Solid sand-lime brick
- Natural stone with dense structure
- Solid brick made from lightweight concrete
- Solid brick

## Functioning

- S 8 RD is suitable for push-through installation.
- WCN and S 8 D are suitable for both pre-positioned and push-through installation.
- The WB5N's assembly bracket is flexibly positioned on the base using the long hole. The ceramics are then fixed to the bracket via the rows of holes. These counterbalance any height differences in the ceramic assembly holes.

## Installation WCN / S 8 D 70 WCR / S 8 RD WCR

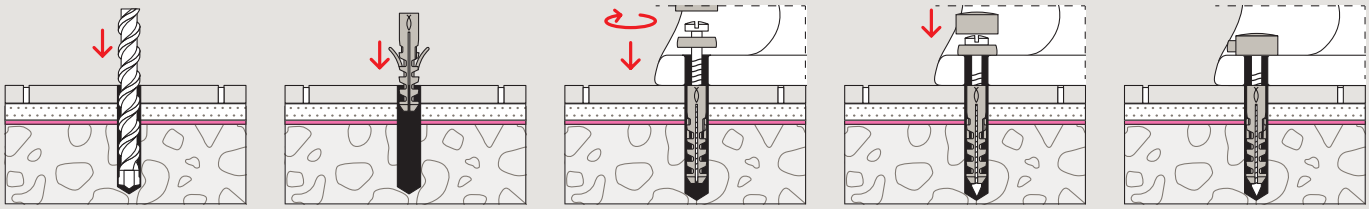

## Installation WB 5N

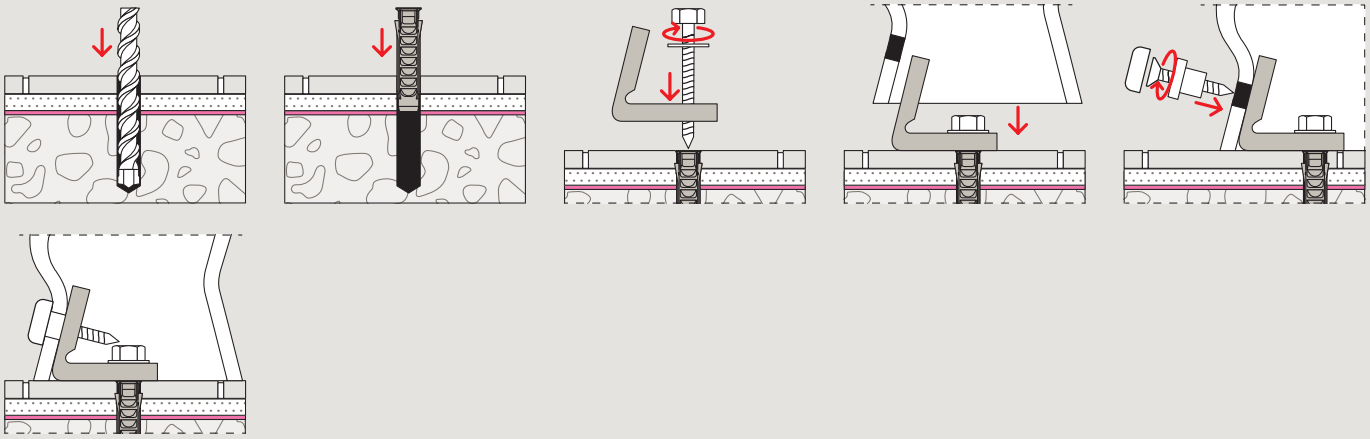

## Sanitary fixing set WCN



WCN

| Item | Item no. | Contents | Sales unit [pcs] |
|---|---|---|---|
| **WCN 1** | **060561** | 2 wall plugs S 8, 2 stainless steel screws 6 x 70 hex., 2 cover caps white, 2 snap-fit sleeves | 1 |
| **WCN 2** | **060562** | 2 wall plugs S 8, 2 stainless steel screws 6 x 70 hex., 2 cover caps chrome-coloured, 2 snap-fit sleeves | 1 |

## Sanitary fixing set S 8 D 70 WCR



S 8 D WCR

| Item | Item no. | Contents | Sales unit [pcs] |
|---|---|---|---|
| **S 8 D 70 WCR** | **060564** | 2 wall plugs S 8, 2 stainless steel screws 6 x 70 hex., 2 cover caps chrome and white, 2 snap-fit sleeves | 1 |

## Sanitary fixing set S 8 RD WCR



S 8 RD WCR

| Item | Item no. | Contents | Sales unit [pcs] |
|---|---|---|---|
| **S 8 RD 60 WCR** | **060570** | 2 wall plugs S 8 RD 60, 2 stainless steel screws 6 x 65 hex., 2 cover caps chrome and white | 1 |
| **S 8 RD 80 WCR** | **060568** | 2 wall plugs S 8 RD 80, 2 stainless steel screws 6 x 85 hex., 2 cover caps chrome and white | 1 |

# WC fixing WB 5N



WB 5N

| Item | Item no. | Contents | Sales unit [pcs] |
|---|---|---|---|
| **WB 5N** | **018652** | 2 Expansion plugs SX Plus 10, 2 Screws 7x60 zinc-plated, 2 Nylon angles, 2 washers 8mm, 2 screws A2 stainless steel, 2 flanged sleeves, 2 cover caps chrom | 1 |

# Wash basin and urinal fixings

Complete fixing sets for wash basins, urinals and sanitary installations.





Urinals



Wash basins

## Applications

- Wash basins
- Urinals
- Built-in toilets
- Boilers
- Gas heaters
- Cisterns
- Consoles

## Advantages

- Complete fixing sets allow for quick and easy installation.
- The universal plug UX can be used in solid and hollow materials, thus offering a high level of flexibility.
- Flanged nuts and collar sleeves made of high-strength nylon are resistant to ageing and chemicals, and guarantee a long-lasting fixing that will not damage the ceramics.
- Cover caps with a high-quality chrome finish ensure the fixture remains visually attractive for a long period of time.

## Certificates

★★★★★
Nylon
Quality

## Building materials

- Concrete
- Vertically perforated brick
- Hollow blocks made from lightweight concrete
- Perforated sand-lime brick
- Solid sand-lime brick
- Natural stone
- Aerated concrete
- Solid panel made from gypsum
- Solid brick made from lightweight concrete
- Solid brick

## Functioning

- The rimless UX is suitable for pre-positioned and push-through installation.
- Screwing in the screw causes the UX to expand in solid and hollow building materials.
- Maximum load-bearing capacity is achieved only if the minimum screw-in depth is reached.
- Tiles and plaster are not classed as load-bearing base materials.

## Installation WD/BO/WST/UST

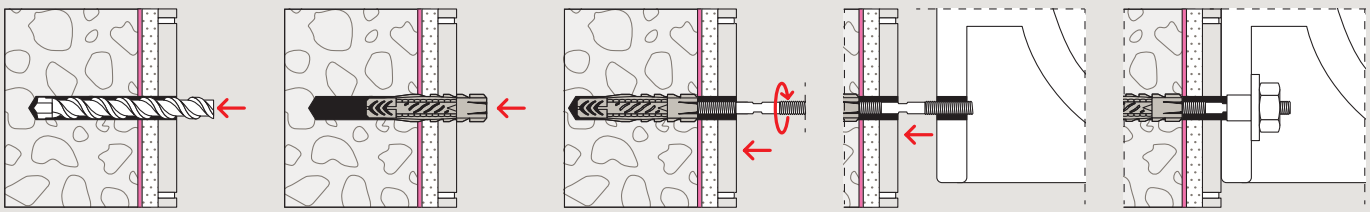

## Wash basin and urinal fixing WD



WD

| Item | Item no. | Contents | Sales unit [pcs] |
|---|---|---|---|
| WD 8 x 90 | 080659 | 2 wall plugs UX 10 x 60, 2 stud screws M8 x 90 zinc-plated, 2 flanged nuts BU M8 | 1 |
| WD 8 x 110 | 080658 | 2 wall plugs UX 10 x 60, 2 stud screws M8 x 110 zinc-plated, 2 flanged nuts BU M8 | 1 |
| WD 10 x 120 | 080655 | 2 wall plugs UX 14 x 75, 2 stud screws M10 x 120 zinc-plated, 2 flanged nuts BU M10 MH | 1 |
| WD 10 x 140 | 080656 | 2 wall plugs UX 14 x 75, 2 stud screws M10 x 140 zinc-plated, 2 flanged nuts BU M10 MH | 1 |

## Boiler fixing BO



BO

| Item | Item no. | Contents | Sales unit [pcs] |
|---|---|---|---|
| BO 120 | 080654 | 4 wall plugs UX 14 x 75, 4 stud screws M10 x 120 zinc-plated, 4 flanged nuts BU M10 | 1 |

## Wash basin fixing WST





WST

| Item | Item no. | Contents | Sales unit [pcs] |
|---|---|---|---|
| WST 12 x 150 | 080661 | 2 wall plugs UX 14 x 75, 2 stud screws M12 x 150 zinc-plated, 2 flanged bushes BDH M12, 2 hexagon nuts M12 zinc-plated | 1 |
| WST 12 x 180 | 080662 | 2 wall plugs UX 14 x 75, 2 stud screws M12 x 180 zinc-plated, 2 flanged bushes BDH M12, 2 hexagon nuts M12 zinc-plated | 1 |

## Wash basin fixing WST Klik Plus



WST Klik Plus

| Item | Item no. | Drill diameter $d_0$ [mm] | Min. drill hole depth $h_1$ [mm] | Anchor length l [mm] | Screw dimension $d_s$ x $l_s$ [mm] | Max. fixture thickness $t_{fix}$ [mm] | Sales unit [pcs] |
|---|---|---|---|---|---|---|---|
| WST Klik Plus 120 | 567591 | 12 | 80 | 60 | M10 x 127 | 40 | 1 |
| WST Klik Plus 140 | 567592 | 14 | 90 | 70 | M10 x 140 | 40 | 1 |

## Urinal fixing UST



UST 8 x 110



UST 10 x 120

| Item | Item no. | Contents | Sales unit [pcs] |
|---|---|---|---|
| **UST 8 x 110** | **083578** | 2 wall plugs UX 10 x 60, 2 stud screws M8 x 110, 2 washers B 8.4 DIN 125, 2 plastic washer 8,4 x 16 x 1,6, 2 cap nuts FA 8, 2 cover caps chrome plated | 1 |
| **UST 10 x 120** | **080668** | 2 wall plugs UX 14 x 75, 2 stud screws M10 x 120, 2 flanged nuts BU M10, 2 cover caps AKM 10 CR | 1 |

## WC and sanitary fixing WL



WL

| Item | Item no. | Contents | Sales unit [pcs] |
|---|---|---|---|
| **WL 7 x 60** | **080651** | 2 plugs S 10, 2 screws 7 x 60 hex. head zinc-plated, 2 washers zinc-plated | 1 |
| **WL 8 x 70** | **080652** | 2 plugs S 10, 2 screws 8 x 70 hex. DIN 571 zinc-plated, 2 washers zinc-plated | 1 |
| **WL 10 x 80** | **080650** | 2 plugs S 12, 2 screws 10 x 80 hex. DIN 571 zinc-plated, 2 washers zinc-plated | 1 |

## Flanged nut BU M

**Flanged nut BU M**



| Item | Item no. | Thread M | Width across nut SW [mm] | Washer [mm] | Match | Sales unit [pcs] |
|---|---|---|---|---|---|---|
| **BU M 8 MH** | **060200**[1)] | M8 | 17 | 40 | STS M8 | 25 |
| **BU M10 MH** | **060201** | M10 | 17 | 40 | STS M10 | 25 |
| **BU M12 MH** | **060204** | M12 | 19 | 40 | STS M12 | 25 |

[1)] Delivery time on request.

## Cover cap AKM

**Cover cap AKM**



| Item | Item no. | Colour | Match | Sales unit [pcs] |
|---|---|---|---|---|
| **AKM 10 W** | **080972** | white | BU M10 MH | 20 |
| **AKM 10 CR** | **080951** | chrome | BU M10 MH | 100 |
| **AKM 12 CR** | **080952** | chrome | BU M12 MH | 100 |

# Wash basin fixing WST II

Complete fixing set for wash basins.





Wash basins



Urinals

## Applications

- Wash basins
- Urinals
- Buiot-in toilets
- Cisterns

## Advantages

- Complete fixing set ensures a fast and easy installation.
- The new collar nut enabels the prefixing of the wash basin and is therefore suitable for an easy one man installation.
- The white collar nut fitts to all established ceramics and offers therefore an optical attractive fixing solution.
- The usage of the DuoPower allows a wide range of applications with one plug.
- The usage of a diameter 12 plug reduces the drilling depth and safes time.
- The stud screw with integrated torx simplifies the installation and provides a comfortable installation.

## Certificates

2K Technology

DuoLine

## Building materials

**Suitable for:**

- Concrete
- Vertically perforated brick
- Hollow blocks made from lightweight concrete
- Perforated sand-lime brick
- Solid sand-lime brick
- Natural stone
- Aerated concrete
- Solid panel made from gypsum
- Solid brick made from lightweight concrete
- Solid brick

## Functioning

- The enclosed DuoPower made of two materials, expands, folds or knots depending on the building material and ensures thereby always the optimum product function.
- The stud screw can be installed with the inner torx in the head of the screw. This enables a fast and easy installation without the need of an additional tool.
- By turning on the white collar nut the wash basin is already prefixed and remains in his position. In the next step the metall nut is turned on the stud screw for the final installation of the wash basin.
- Maximum load-bearing capacity is achieved only if the minimum screw-in depth is reached.
- Tiles and plaster are not classed as load-bearing base materials.

## Installation WST II

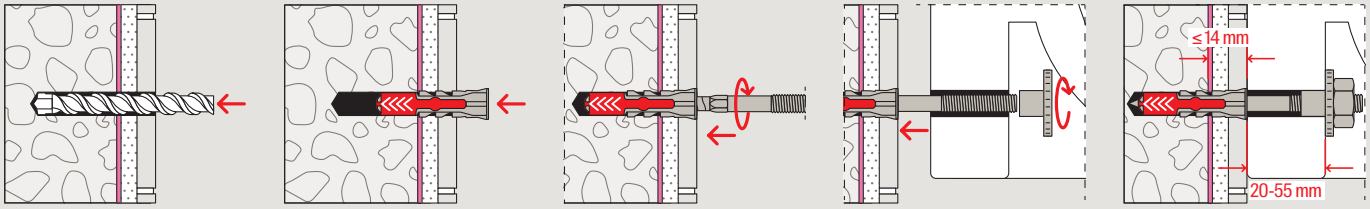


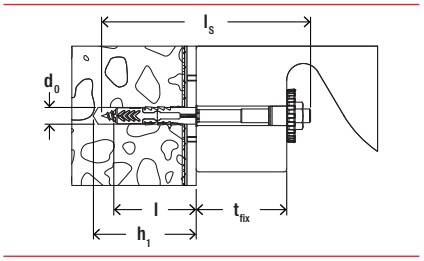


## Technical data

**Wash basin fixing WST II**



WST II with DuoPower

| Item | Item no. | Drill diameter $d_0$ [mm] | Min. drill hole depth $h_1$ [mm] | Anchor length l [mm] | Screw dimension $d_s$ x $l_s$ [mm] | Fixture thickness $t_{fix}$ [mm] | Sales unit [pcs] |
|---|---|---|---|---|---|---|---|
| **WST II 10x140** | **567430** | 12 | 80 | 60 | 10.0 x 140 | 20 - 55 | 1 |

## Loads

**Washbasin WST II in combination with DuoPower**

Recommended loads[1) 2)] for a single anchor.

| Type | | | WST II |
|---|---|---|---|
| **Screw** | | **[mm]** | **10 x 140** |
| **DuoPower plug** | | **[mm]** | **12 x 60** |
| **Recommended load in the respective base material $F_{rec}$** | | | |
| **Concrete** | ≥ C20/25 | **[kN]** | 2.20 |
| **Solid brick** | ≥ Mz 12 | **[kN]** | 1.30 |
| **Solid sand-lime brick** | ≥ KS 12 | **[kN]** | 2.20 |
| **Aerated concrete** | ≥ PP2, AAC | **[kN]** | 0.20 |
| **Aerated concrete** | ≥ PP4, AAC | **[kN]** | 0.80 |
| **Vertically perforated brick** | ≥ Hlz 12; ρ ≥ 0.9 kg/dm³ | **[kN]** | 0.35 |
| **Perforated sand-lime brick** | ≥ KSL 12; ρ ≥ 1.6 kg/dm³ | **[kN]** | 0.75 |
| **Hollow lightweight concrete blocks** | ≥ Hbl 2 | **[kN]** | 0.20 |

[1)] Required safety factor are considered. Load values apply when using the supplied plug, the stud screws and considering a total ceramic tile thickness (tile + tile adhesive + bonded sealant) of maximum 14 mm.
[2)] Valid for tension load, shear load and oblique load under any angle.

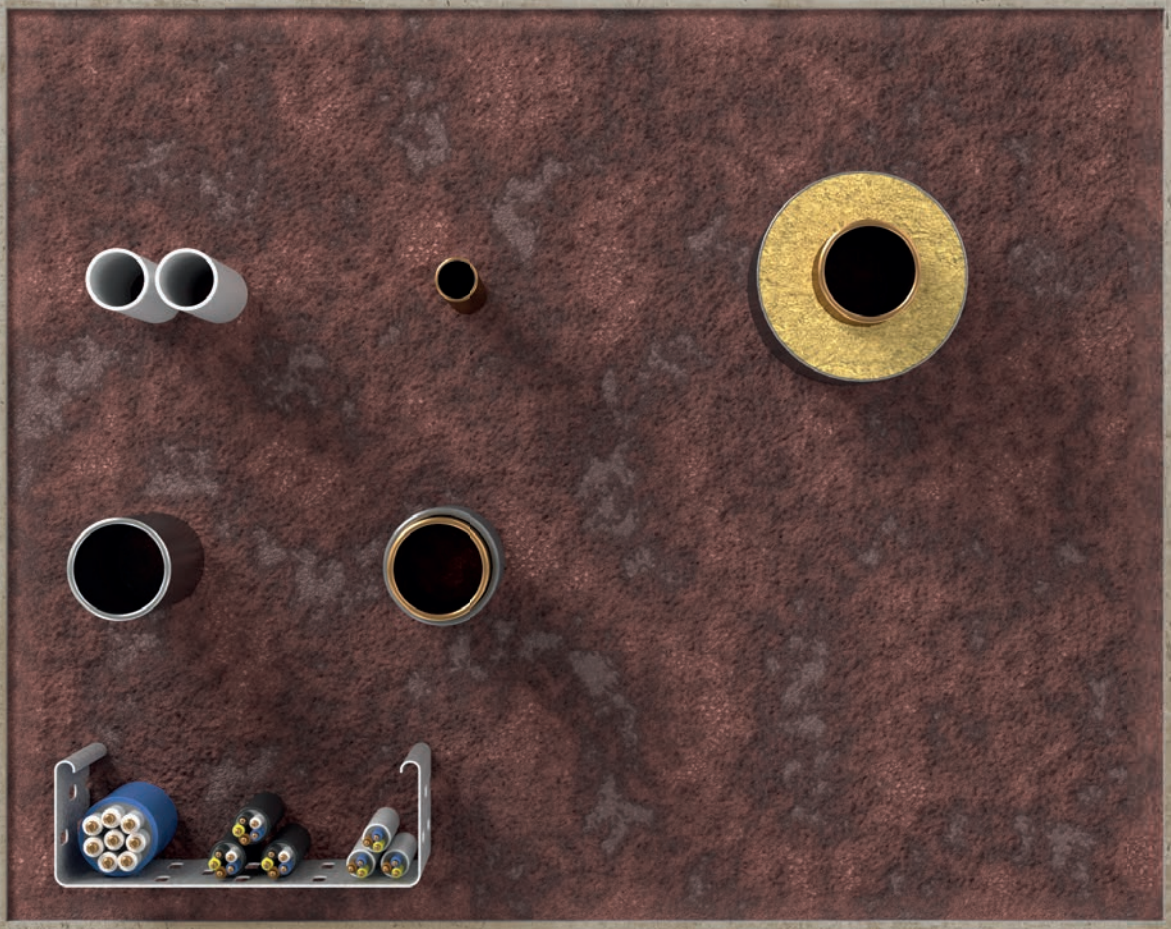

# 16
# FireStop


| | | |
|---|---|---|
| Intumescent Acoustic Mastic FiAM | 548 |  |
| Intumescent Acoustic Mastic FiAM US | 551 |  |
| Rapid Fire Seal RFS 640 | 553 |  |
| Fire I Barr ElastoSeal FFB-ES | 555 |  |
| Universal FireStopping Sealant UFS | 557 |  |
| Intumescent Graphite Mastic FiGM | 560 |  |
| Foam Barrier System PLUS | 563 |  |
| Intumescent Pipe Wraps FiPW | 566 |  |
| Intumescent Wrap Strip FiWS | 569 |  |
| Fire Collar FFC | 572 |  |
| Intumescent Pillows FiP | 574 |  |
| Coated Panel System FCPS | 576 |  |
| FireStop Compound FFSC | 578 |  |

# Intumescent Acoustic Mastic FiAM

Flexible fire resistant acoustic mastic






Construction joint application



Non combustible pipe application

## Applications

- Metallic pipes: 13“ (325 mm)
- Cable trays: 18“ x 2“ (450 x 50 mm)
- Cable bunches: 4“ (100 mm)
- Linear joints: flexible and rigid construction elements
- Joints between FCPS coated panel system

## Advantages

- Water based
- Low VOC
- Movement capability ± 25 %
- Excellent acoustic properties
- Approved for infinite linear gap length
- Halogen and solvent free
- Paintable and excellent slump characteristics

## Certificates

ETA-20/1065
ETA-20/1064

EU

EN ISO 10140
EN 1026
EN 1366-3
EN 1366-4
ASTM E 84 (UL 723)
ASTM E 1966 (UL 2079)

## Building materials

- Flexible wall constructions
- Rigid floor and wall constructions
- Masonry
- Concrete
- Timber
- Steel
- FCPS System

## Functioning

- FiAM is a one-part water-based acrylic emulsion.
- It has a fire resistance of up to 5 hours when used in construction joints and services in both vertical and horizontal applications.
- When exposed to fire, it reacts to form a highly insulative char that slows down heat transfer and provides a barrier to fire.
- It is suitably compatible in a variety of materials, and is utilised within the FCPS which is designed to seal large openings in fire rated floors and walls.

## Installation FiAM

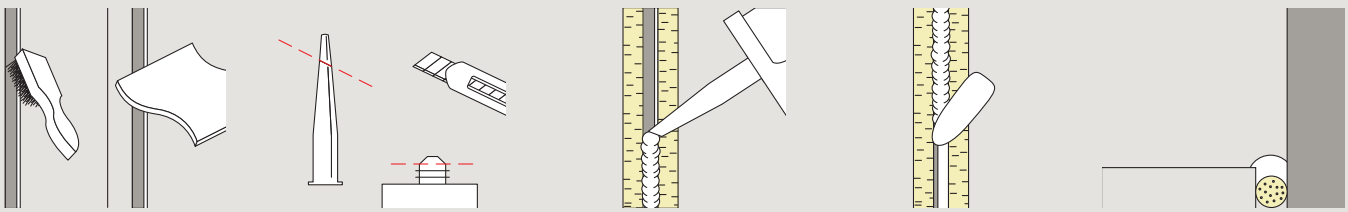

## Technical data

| Item | Item no. | Approval ETA | Languages on the cartridge | Contents [ml] | Contents [kg] | Adapted for | Sales unit [pcs] |
|---|---|---|---|---|---|---|---|
| **FiAM 310** | **053011** | ● | DE, EN, FR, IT | 310 | – | – | 1 |
| **FiAM 310** | **538152** | ● | DA, FI, NO, SV | 310 | – | – | 1 |
| **FiAM 310** | **538150** | ● | ES, NL, PT, TR | 310 | – | – | 1 |
| **FiAM 310** | **538151** | ● | CS, HU, PL, SK | 310 | – | – | 1 |
| **FiAM 600** | **056006** | ● | – | 600 | – | – | 1 |
| **FiAM bucket** | **568134** | ● | – | – | 20 | – | 1 |
| **KPM 2 Plus** | **053117** | – | – | – | – | FiAM Plus 310, FFRS 310, UFS 310, FiGM 310 | 1 |
| **Applicator gun 600** | **097967** | – | – | – | – | FiAM Plus 600 | 1 |

## Technical data

| | |
|---|---|
| Base material | Water-based acrylic |
| Relative gravity | approx. 1.6 g/cm³ |
| Skin-forming time | approx. 10 min at 23 °C RH |
| Curing rate | - |
| Storage temperature | + 5 °C to + 30 °C °C |
| Movement capability | - |
| pH Value | 8 - 9.5 |
| Accoustic performance | - |
| Yield per l/m | - |
| Colour | - |
| European Technical Assessment | ETA-20/1064, ETA-20/1065 |
| CE marking | 2812-CPR-JA5044 |

Curing rate is dependent on substrate, air humidity and weather conditions.

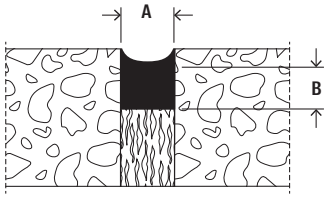


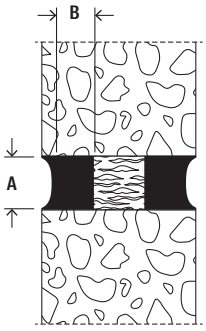


## Application data

| Joint width A [mm] | Joint depth B [mm] | ml per linear metres* |
|---|---|---|
| 60 | 5 | 300 |
| 50 | 5 | 250 |
| 30 | 5 | 150 |
| 15 | 5 | 75 |
| 5 | 5 | 25 |

*The consumption of the product depends on the application.

| Substrate | Max. joint width [mm] | Fire ratings | |
|---|---|---|---|
| | | Integrity rating [min] | Insulation rating [min] |
| **Concrete/masonry** | 60 | 240 | 240 |
| **Concrete or masonry/steel** | 60 | 240 | 60 |
| **Concrete or masonry/timber** | 60 | 60 | 60 |
| **Concrete/masonry/head detail** | 60 | 240 | 240 |

For detailed information please refer to listed system.

| Service type size | | Fire ratings | |
|---|---|---|---|
| | | Integrity rating [min] | Insulation rating [min] |
| **Copper/steel/metal pipes** | 35 - 159 mm diameter | up to 240 | up to 240 |
| **Loaded cable try** | 450 x 50 (tray) cables to 21 mm | up to 120 | up to 90 |
| **Single/bunched cables** | 21 - 100 mm diameter cables | up to 120 | up to 120 |

# Intumescent Acoustic Mastic FiAM US

General purpose fire resistant sealant designed for UL specific applications






Construction joint application

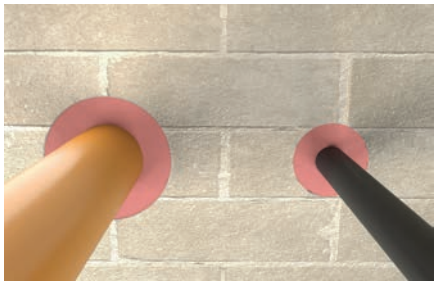

Non combustible pipe application

## Applications

- Linear joints: flexible and rigid construction elements with dynamic movement
- Metallic pipes and ducts
- Insulated metallic pipes
- Conduits
- Cable and cable bunches
- Cable trays

## Advantages

- Water based
- Excellent acoustic properties
- Low VOC
- Halogen and solvent free
- Various applications with two products only
- Age resistant
- Smoke resistant
- Excellent adhesion
- F-rating up to 3 hrs
- T-rating up to 3 hrs



## Certificates

CLASSIFIED C UL US

FBC SYSTEM COMPATIBLE

ASTM E 84 (UL 723)
ASTM E 814 (UL 1479)
ASTM E 1966 (UL 2079)

## Building materials

- Flexible wall constructions
- Rigid floor and wall constructions
- Masonry
- Concrete
- Steel

## Functioning

- The FiAM US is a one-part water based fire resistant sealant designed for a wide range of UL listed applications.
- The FiAM US can be used in construction joint and service penetration applications.
- The FiAM US can be used in both vertical and horizontal orientation and can be used in conjunction with the FiWS for a wide range of combustible services.

## Installation FiAM US

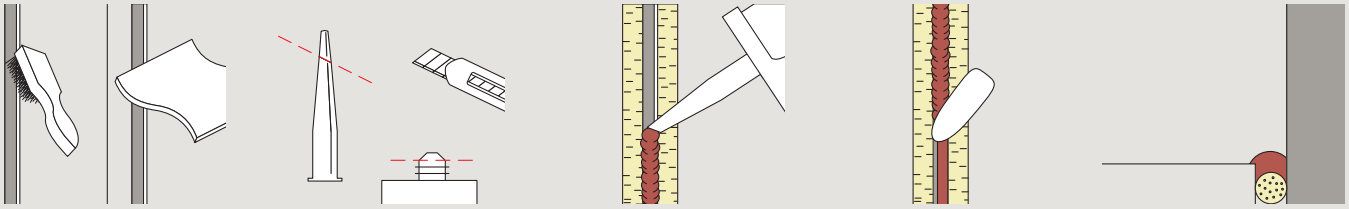

## Technical data

| Item | Item no. | Languages on the cartridge | Contents [ml] | Contents [l] | Adapted for | Sales unit [pcs] |
|---|---|---|---|---|---|---|
| **FiAM US** | **546487** | DE, EN, ES, TR | 310 | – | – | 1 |
| **FiAM US bucket** | **554934** | – | – | 19 | – | 1 |
| **KPM 2 Plus** | **053117** | – | – | – | FiAM Plus 310, FFRS 310, UFS 310, FiGM 310 | 1 |

## Technical data

| | |
|---|---|
| Base material | water-based elastomeric |
| Skin-forming time | approx. 20 - 30 min |
| Curing rate | 3 to 4 weeks at 25 °C |
| Storage temperature | + 2 °C to + 49 °C |
| Movement capability | up to 33 % % |
| pH Value | 7 - 8 |
| Accoustic performance | 65 dB |
| Surface burning characteristics | Flame spread: 10 - Smoke: 10 |
| Colour | red |

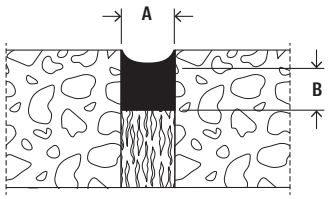


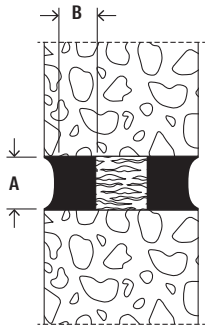


## Application data

| Joint width A [mm] | Joint depth B [mm] | ml per linear metres* |
|---|---|---|
| 1“ (25 mm) | 5/8“ (16 mm) | 400 |
| 1“ (25 mm) | 1/2“ (13 mm) | 325 |
| 2“ (50 mm) | 1/4“ (6 mm) | 300 |
| 3-1/2“ (90 mm) | 1/4“ (6 mm) | 540 |
| 3/4“ (20 mm) | 5/8“ (16 mm) | 320 |

*The consumption of the product depends on the application.

# Rapid Fire Seal RFS 640

Rapid fire resistant sealant




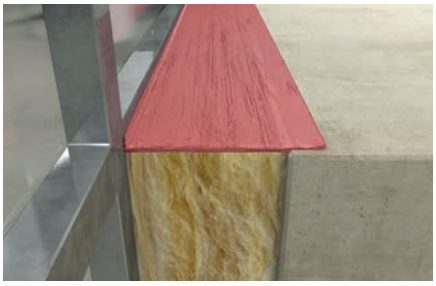

Curtain wall application



Head of wall application

## Applications

- Curtain wall/slab edge: 8“ (200 mm)
- Head of wall: 4“ (100 mm)
- General construction joints: 8“ (200 mm)
- Cable tray: 24“ x 4“ (600 mm x 100 mm)
- Steel pipes: 8“ (200 mm)

## Advantages

- Water based
- Flexible set
- Contains mould growth inhibitor
- Freeze - thaw capabilities
- Paintable
- Accelerated age and humidity tested
- Low VOC
- Spray or brush applied
- Excellent smoke seal
- Water resistant
- Asbestos and solvent free
- Can be used for internal applications and for conditions where dynamic movement may occur.

16

## Certificates

ASTM E 84 (UL 723)
ASTM E 814 (UL 1479)
ASTM E 1966 (UL 2079)
ASTM E 2307

## Building materials

- Flexible wall constructions
- Rigid floor and wall constructions
- Flexible wall
- Masonry
- Concrete

## Functioning

- RFS 640 is a spray grade one-part water-based, fire rated sealant, which has been designed to provide smoke and fire protection on construction joints and service penetrations in both vertical and horizontal applications.
- Provides up to 3 hours fire rating (also in accordance with ASTM E 2307).
- Meeting the new requirements of ASTM E 1399, RFS 640 has been cycled tested up to 500 times.
- Can be used for internal applications and for conditions where dynamic movement may occur.
- RFS 640 has also been tested at positive pressure with a minimum 0.01“ (2.5 mPa) water i.a.w UL 2079 test standards.

## Installation RFS 640 - Joint application

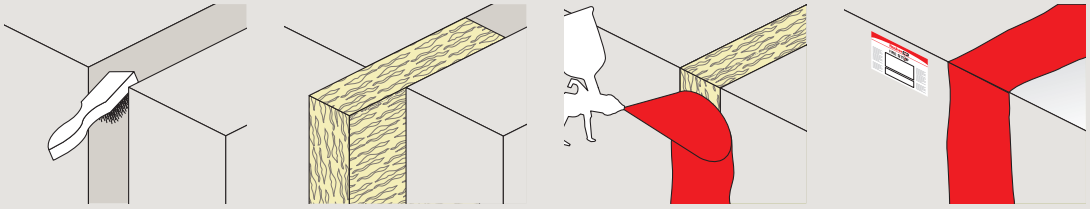

## Installation RFS 640 - Penetration application

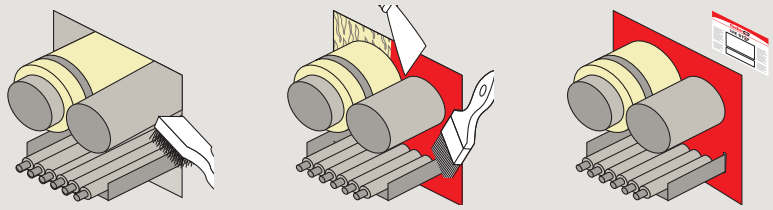

## Installation RFS 640 - Air duct application

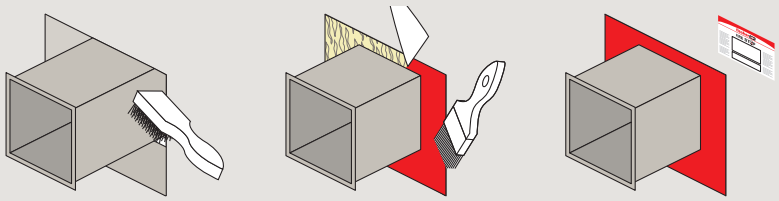



## Technical data

| | Item no. | Contents [l] | Colour | Sales unit [pcs] |
|---|---|---|---|---|
| **Item** | | | | |
| **RFS 640** | **516539** | 19 | red | 1 |

## Technical data

| | |
|---|---|
| Base material | Waterborne |
| Density | approx. 1.25 g/cm³ |
| Skin-forming time | approx. 30 - 45 min |
| Curing time | approx. 5 - 7 days |
| Storage temperature | + 2 °C to + 49 °C |
| Movement capability | up to 33 % % |
| Water resistant | Depending on individual system |
| pH Value | 7 - 8 |
| Accoustic performance | 65 dB |
| Surface burning characteristics | Flame spread: 0 - Smoke: 0 |

[ERROR READING XHTML FRAGMENT]

# Fire I Barr ElastoSeal FFB-ES

Elastomeric fire resistant coating for construction joint and assemblies




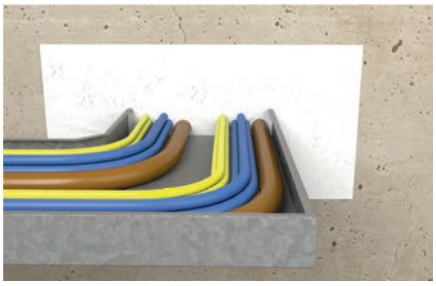

Electrical application

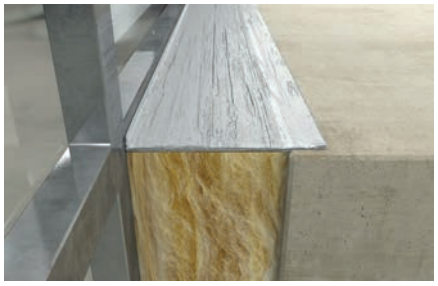

Curtain wall application

## Applications

- Linear joints in construction elements up to 20“ (500 mm) wide
- Floor to floor
- Wall to wall
- Head of wall
- Bottom of wall
- Curtain wall
- Cabel / cabel trays
- Metallic pipes

## Advantages

- Openings up to 20“ (500 mm) wide
- Movement capability of 25 %
- Working temperature between -10 °C and 95 °C
- Can be spray or brush applied
- Air permability
- Acoustic performance
- 80 kg/m³ stone wool base
- 2.5 mm WFT required

## Certificates

**ETA-20/1103**
**ETA-20/1101**
EN ISO 10140
EN 1026
EN 1027
EN 1364-4
EN 1366-3
EN 1366-4

## Building materials

- Flexible wall constructions
- Rigid floor and wall constructions
- Concrete
- Masonry

## Functioning

- FFB-ES is a one-part water-based acrylic coating, which has been designed to provide smoke and fire protection on construction joints in both vertical and horizontal applications.
- Developed for use on 80 kg/m³ stone wool base.
- Once applied, it prevents the passage of fire and smoke and can contribute to the acoustic value of a structure between fire rated compartments giving a fire resistance for up to EI 240.

## Installation FFB-ES Plus perimeter joint

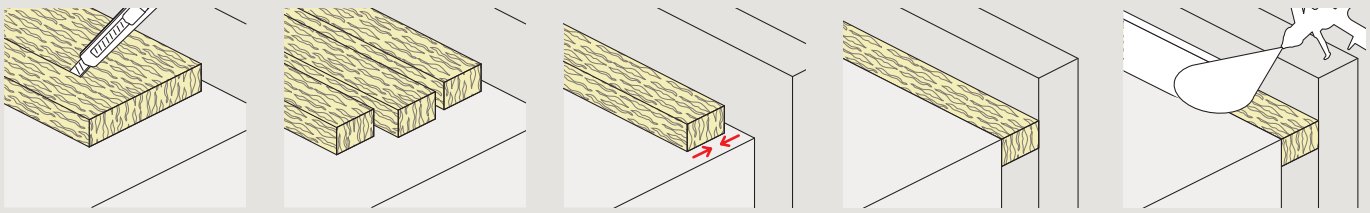

## Technical data

| Item | Item no. | Approval ETA | Contents [kg] | Sales unit [pcs] |
|---|---|---|---|---|
| **FFB-ES/White** | **520753** | ● | 20 | 1 |
| **FFB-ES/Grey** | **520755** | ● | 20 | 1 |
| **FFB-ES/Red** | **520756** | ● | 20 | 1 |

## Technical data

| | |
|---|---|
| Description | water-based, flexible acrylic coating |
| Density | 1.25 - 1.3 g/cm$^3$ |
| Coating thickness | 2.5 mm nominal, wet film thickness |
| Sealant coverage | 2.8 kg/m$^2$, 2.24 l/m$^2$ |
| Fire resistance | EN 1366-4:2006 120 EI |
| Accoustic performance | - |
| Air permeability | 600 PA positive and negative pressure and tested to EN 1026 |
| Water permeability | 450 PA positive pressure and tested to EN1027 |
| Spraying guidance | - |
| Storage temperature | - 5 °C to +25 °C |
| Colour | white |
| European Technical Assessment | ETA-20/1101, ETA-20/1103 |
| CE marking | 2531-CPR-CX010324 |

## Application data

16

| Joint width [inch] | Joint width [mm] | Ft/gallon | Ft/pail | LM/gallon [mm] | LM/pail |
|---|---|---|---|---|---|
| 0.25 | 6 | 119 | 800 | 54 | 244 |
| 0.50 | 13 | 99 | 683 | 44 | 202 |
| 0.75 | 19 | 85 | 567 | 38 | 173 |
| 1.00 | 25 | 73 | 492 | 33 | 150 |
| 1.25 | 32 | 66 | 443 | 30 | 135 |
| 2.00 | 51 | 49 | 328 | 22 | 100 |
| 4.00 | 102 | 31 | 207 | 14 | 63 |
| 6.00 | 152 | 22 | 148 | 10 | 45 |
| 8.00 | 203 | 16 | 108 | 7 | 33 |

The above table provides an approx. yield for a coverage of 2.5 mm Wet Film Thickness (WFT) with a 12.5 mm overlap. Application shall be as per listed system.

# Universal FireStopping Sealant UFS

Universal firestopping sealant which is suitable for metallic, non-metallic services and construction joints




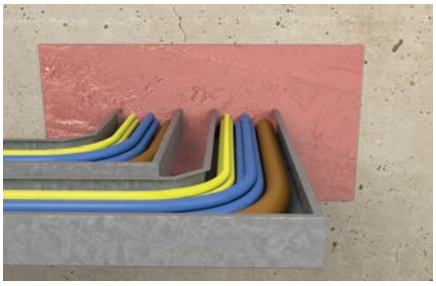

Electrical application

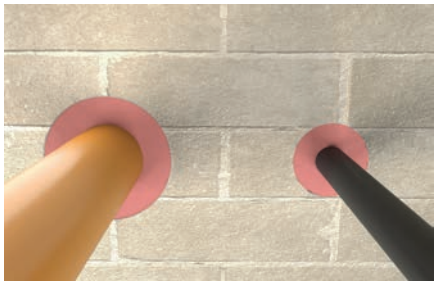

Combustible and non combustible pipes application

## Applications

- Metallic services: steel and cast iron 20“ (500 mm) - copper 6“ (150 mm)
- Non metallic service: PVC 2“ (51 mm open) 3“ (75 mm closed)
- Insulated service: 20“ (500 mm)
- Construction joints: 4“ (100 mm)
- HVAC 100“ (2500 mm)
- Cable bunches 4“ (100 mm): busway 27“ (686)

## Advantages

- Water based
- Flexible set
- Contains mould growth inhibitor
- Freeze - thaw capabilities
- Paintable
- Accelerated age and humidity tested
- Low VOC
- Excellent acoustic properties

16

## Certificates

CLASSIFIED C UL US

FBC SYSTEM COMPATIBLE

FM APPROVED

ASTM E 84 (UL 723)
ASTM E 814 (UL 1479)
ASTM E 1966 (UL 2079)

## Building materials

- Wall constructions - linear joints
- Floor constructions - linear joints
- Flexible wall
- Masonry
- Concrete

## Functioning

- UFS is a one-part water-based intumescent sealant which is used for sealing construction joints and service penetration in both vertical and horizontal applications.
- Up to 4 hours of fire rating can be provided.
- It exhibits excellent slump characteristics, is easy to apply and cures to a flexible set. It is suitable for internal applications and conditions where dynamic movement may occur.
- UFS can be used for most application properties.

## Installation UFS - Cabel application

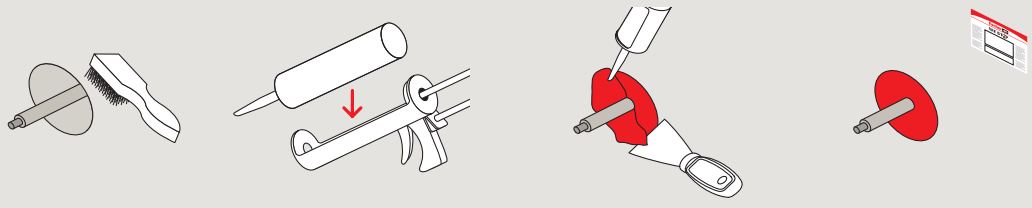

## Installation UFS - Pipe application

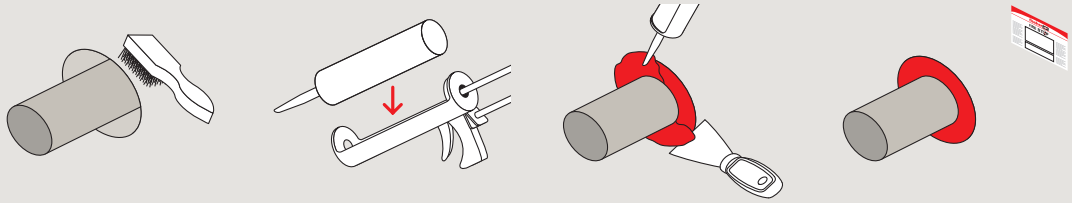

## Installation UFS - Penetration application

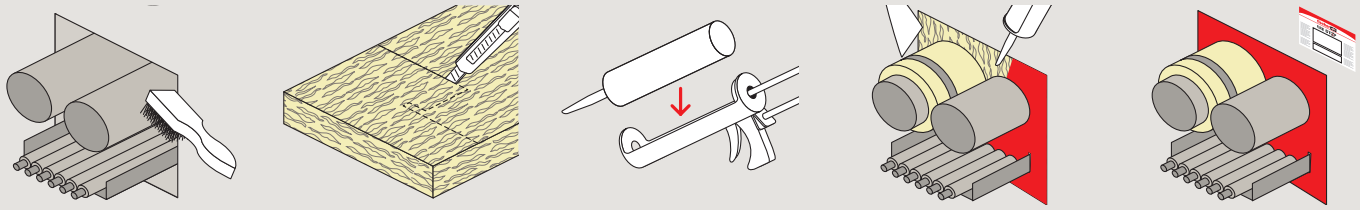

## Installation UFS - Air duct application

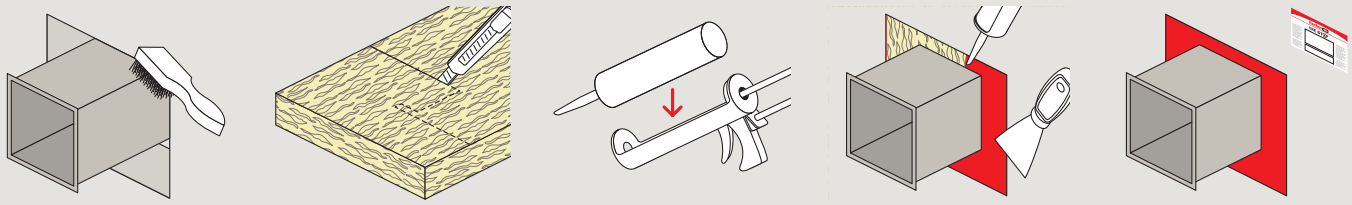



## Technical data

| Item | Item no. | Languages on the cartridge | Contents [ml] | Contents [l] | Adapted for | Sales unit [pcs] |
|---|---|---|---|---|---|---|
| **UFS 310** | **516538**[1)] | DE, EN, FR, NL | 310 | – | – | 12 |
| **UFS 310** | **538136** | CS, HU, PL, SK | 310 | – | – | 1 |
| **UFS 310** | **538137** | DA, FI, NO, SV | 310 | – | – | 1 |
| **UFS 310** | **538135** | TR, PT, ES, IT | 310 | – | – | 1 |
| **UFS bucket** | **533889** | – | – | 19 | – | 1 |
| **KPM 2 Plus** | **053117** | – | – | – | FiAM Plus 310, FFRS 310, UFS 310, FiGM 310 | 1 |

[1)] Curing rate is dependant on substrate, air humidity and weather conditions.Movement capability depends on UL listed system and configuration.

## Technical data

| | |
|---|---|
| Base material | water-based elastomeric |
| Density | approx. 1.31 g/cm$^3$ |
| Skin-forming time | approx. 20 - 30 min |
| Curing rate | approx. 4 mm in 72 hours |
| Storage temperature | + 2 °C to + 49 °C |
| Movement capability | up to 50 % |
| Intumescent activation | 190 °C to 593 °C °C |
| pH Value | 6.5 - 7 |
| Surface burning characteristics | Flame spread: 0 - Smoke: 0 |
| Colour | red |

[ERROR READING XHTML FRAGMENT]

## Application data

| Services | | Fire ratings (minutes) | |
|---|---|---|---|
| **Types** | **Sizes** | **Integrated rating** | **Insulation rating** |
| **PVC/CPVC closed pipe systems** | 3" (75 mm) | 120 | 120 |
| **PVC/CPVC open pipe systems** | 2" (50 mm) | 120 | 120 |
| **Steel and cast iron pipes** | 20" (508 mm) | 180 | 0 |
| **Copper pipes** | 6" (152 mm) | 180 | 0 |
| **Insulated services** | 20" (508 mm) | 120 | 120 |
| **Construction joints** | 4" (100 mm) | 120 | 120 |
| **HVAC** | 100" (2,500 mm) | 120 | 120 |
| **Cable bunches** | 4" (100 mm) | 120 | 120 |
| **Cable tray/ladder** | 24" (600 mm) | 120 | 45 |
| **Bus tar** | 27" (686 mm) | 120 | 45 |

For detailed information please refer to listed system.

# Intumescent Graphite Mastic FiGM

High performance intumescent graphite fire resistant mastic






Electrical application

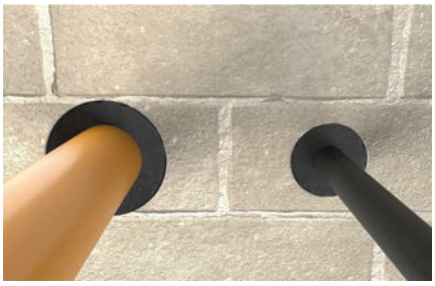

Insulated and combustible pipes

## Applications

- Metallic pipes: 6“ (159 mm)
- Non-metallic pipes: 5“ (125 mm)
- Cable bunches: 1“ (21 mm)
- Insulated service: 6“ (159 mm)
- Construction joints: 1“ (25 mm)
- Mixed services

## Advantages

- Low VOC
- Excellent acoustic properties
- Halogen and solvent free
- Excellent slump characteristics

## Certificates

ETA-20/1105

EN ISO 10140
EN 1026
EN 1366-3

## Building materials

- Concrete
- Masonry
- Steel
- Timber

## Functioning

- FiGM is a one-part water-based flexible acrylic emulsion containing a high pressure intumescent graphite, which is used to seal service penetrations in both vertical and horizontal applications.
- It can expand up to 20 times its own volume and cures to form a resilient, flexible fire seal.

## Installation FiGM - Cable application

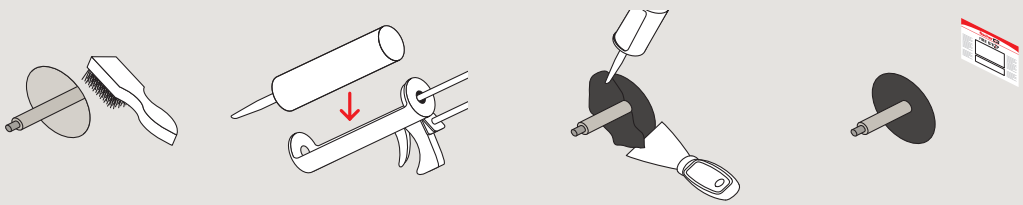

## Installation FIGM - Pipe application

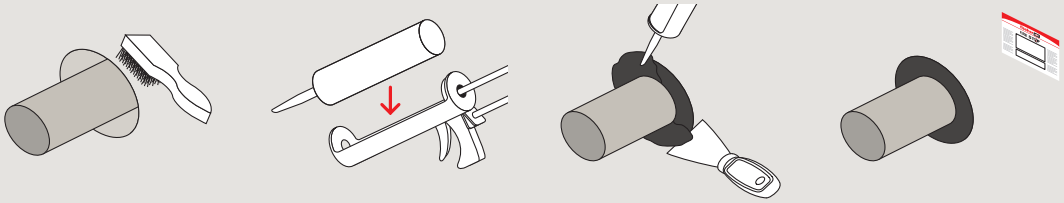

## Installation FIGM - Penetration application

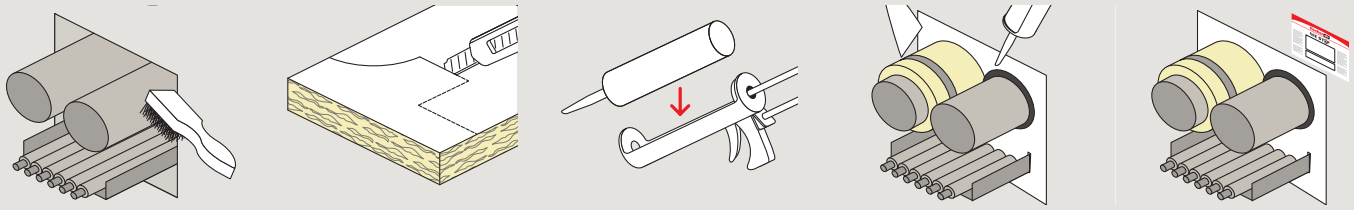

## Technical data

| Item | Item no. | Approval ETA | Languages on the cartridge | Contents [ml] | Adapted for | Sales unit [pcs] |
|---|---|---|---|---|---|---|
| **FiGM 310 ml** | **508765** | ● | DE, EN, FR, IT | 310 | – | 1 |
| **FIGM 310 ml** | **538147** | ● | ES, NL, PT, TR | 310 | – | 1 |
| **FiGM 310 ml** | **538148** | ● | CS, HU, PL, SK | 310 | – | 1 |
| **FiGM 310 ml** | **538149** | ● | DA, FI, NO, SV | 310 | – | 1 |
| **KPM 2 Plus** | **053117** | – | – | – | FiAM Plus 310, FFRS 310, UFS 310, FiGM 310 | 1 |

## Technical data

| | |
|---|---|
| Base material | Aqueous thixotropic paste |
| Density | approx. 1.3 g/cm$^3$ |
| Curing rate | 1.7 mm per 24 hours dependent on conditions |
| Storage temperature | + 5 °C to + 30 °C |
| Tack free after | 30 min |
| Curing system | Waterborne |
| UV resistance | good |
| Expansion | up to 20 times |
| Skin-forming time | 15 min (at 25 °C and 50% relative humidity) |
| Accoustic performance | 64 dB |
| Shelf life | 18 months |
| European Technical Assessment | ETA-20/1105 |
| CE marking | 2531-CPR-CX010327 |
| Chemical and water resistant | - |
| Colour | black |

## Application data

| Services | | Fire ratings (minutes) | |
|---|---|---|---|
| **Types** | **Sizes** | **Integrated rating** | **Insulation rating** |
| **PVC pipe** | Up to 125 mm diameter | 120 | 120 |
| **HDPE pipe** | Up to 90 mm diameter | 120 | 120 |
| **ABS pipe** | Up to 90 mm diameter | 120 | 120 |
| **Insulated copper pipe** | Up to 159 mm diameter + up to 100 mm insulation | 120 | 120 |
| **Cables** | Up to 21 mm diameter x bunches 10 max. | 120 | 120 |
| **Mixed** | Up to 63 mm diameter HDPE + 21 mm diameter cables x 10 | 120 | 120 |

For detailed information please refer to listed system.

# Foam Barrier System PLUS

FireStop Foam and FireStop Block for use in a System. Or individually. ETA approved and UL listed applications.






Electrical application



Mixed penetration application

## Applications

- Metallic pipes up to 8“ (203 mm)
- Insulated metallic pipes
- Conduits
- Cable and cable bunches
- Cable trays
- Mixed multiple penetrations

## Advantages

- Easy access for difficult to reach openings
- Low VOC
- Various applications with two products only
- Age resistant
- Smoke resistant
- Resistant to damp
- Re-enterable and repairable
- Excellent adhesion
- No backing material required
- F-rating / E-Integrity rating up to 2 hours
- T-rating / EI-Insulation rating up to 2 hours

16

## Certificates

**ETA-17/0845**

EN 1366-3
ASTM E 814 (UL 1479)
EN 13501-1

## Building materials

- Concrete (wall and floors)
- Masonry
- Flexible wall

## Functioning

- FBS is a two component polyurethane expanding sound, smoke and firestopping seal for hard to reach locations which expands to up to 5 times of its volume.
- FBB are highly elastic mouldable blocks.
- FIB is a glass fiber reinforced intumescent wrap to enhance the insulation value of ETA applications.
- Tested in accordance with ASTM E 814 (UL 1479) as well as EN 1366-3, EN 13501 the Barrier System PLUS allows an easy application which saves time and costs on site.

## Installation FBS

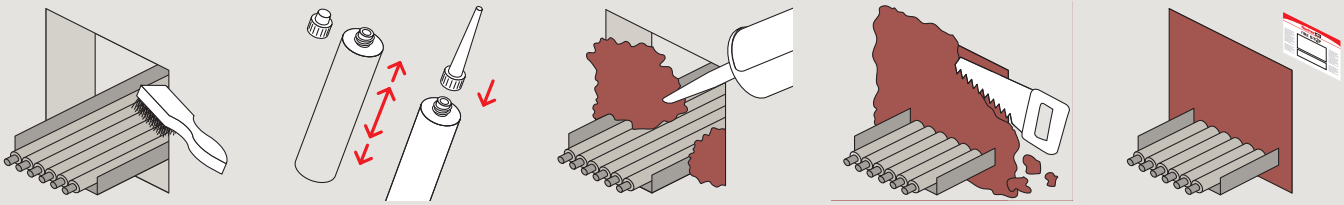

## Installation FBB

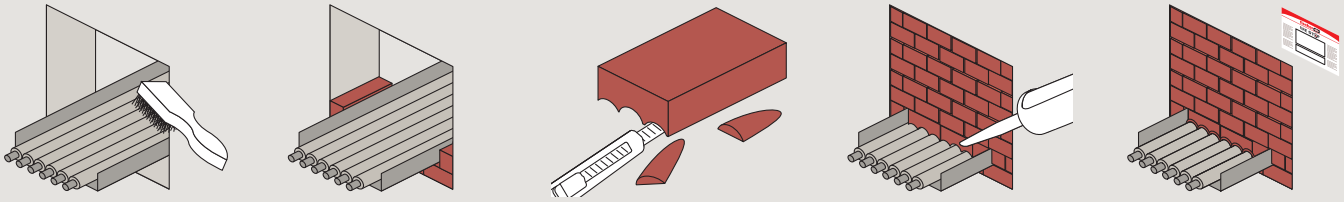

## Technical data

| Item | Item no. | Approval ETA | Languages on the cartridge | Contents [ml] | Dimensions [mm] | Sales unit [pcs] |
|---|---|---|---|---|---|---|
| **FBS-UL** | **544079** | ● | – | 380 | – | 6 |
| **FBB-UL FireStop Block** | **544083** | – | – | – | 200 x 130 x 60 | 12 |
| **FBS-EN** | **544084** | ● | DE, EN, FR, IT | 380 | – | 6 |
| **FBS-EN** | **544085** | ● | DA, FI, NO, SV | 380 | – | 6 |
| **FBS-EN** | **544086** | ● | CS, HU, PL, SK | 380 | – | 6 |
| **FBS-EN** | **544087** | ● | ES, NL, PT, TR | 380 | – | 6 |
| **FBB-EN FireStop Block** | **544088** | ● | – | – | 200 x 144 x 60 | 4 |
| **FIB Insulating Bandage** | **544089** | – | – | – | 5000 x 150 | 1 |
| **FFBD Foam Barrier Dispenser** | **544090** | – | – | – | – | 1 |

16

## Technical data FBS-UL

| | |
|---|---|
| Temperature resistance | - |
| Yield | - |
| Curing time | - |
| Shelf life | - |
| Storage temperature | - |
| Colour | reddish brown |

## Technical data FBS-EN

| | |
|---|---|
| Density | - |
| Temperature resistance | - |
| Construction material class | B2 as per DIN 4102 |
| Yield | - |
| Curing time | - |
| Shelf life | - |
| Storage temperature | - |
| Accoustic performance | - |
| Colour | reddish brown |

## Technical data FBB-EN

| | |
|---|---|
| Temperature resistance | ≤ 80 °C |
| Construction material class | B2 as per DIN 4102 |
| Accoustic performance | 45.5 - 68 |
| Colour | reddish brown |

## Technical data FBB-UL

| | |
|---|---|
| Temperature resistance | ≤ 80 °C |
| Colour | reddish brown |

## Application data - UL

| | Blank opening | Metallic pipes and conduits | Cables/Cable trays | Insulated metall pipes | Mixed penetrations |
|---|---|---|---|---|---|
| **Max. possible sizes of penetrations** | Max 32 x 32 inch (813 x 813 mm) | Max 8 inch (203 mm) diameter | Max 24 inch (610 mm) wide by max. 6 inch (152 mm) deep cable tray | Max 8 inch (203 mm) diameter with 1 inch (25 mm) insulation | see listed system |
| **Barrier System PLUS UL** | C-AJ-0158, W-L-0052 | C-AJ-1669 | C-AJ-3341, C-AJ-4110, W-L-4091 | C-AJ-5383 | C-AJ-8260, C-AJ-8261 |

## Application data - ETA

| | | Seal thickness 144 mm | Seal thickness 200 mm |
|---|---|---|---|
| **Cable / Cable Trays and Ladders** | Sheated electrical cables up t o 80 mm | Wall: E120/EI60 - Floor: EI60 | Wall/Floor: E120/EI90 |
| | Tied cable bundles up t o 100mm | Wall: E120/EI60 - Floor: EI60 | Wall/Floor: E120/EI90 |
| | Non-sheated electrical cables | Wall: E120/EI45 - Floor: E60/EI30 | Wall/Floor: E120/EI60 |
| **Condiuts** | Conduits/pipes of plas tic up to a max. diameter of 40 mm | Wall: E120/EI60 - Floor: E60/EI30 | Wall/Floor: EI120 |
| **Pipes** | Insulated metal pipes with max. diameter of 54 mm | Wall: E120/EI90 - Floor: EI60 | Wall/Floor: E120/EI90 |
| | Non-insulated metal pipes with max. diameter of 28 mm | Wall: E120/EI60 - Floor: EI60 | Wall/Floor: E120/EI90 |
| | Insulated metal pipes with AF/Armaflex insulation up to 88.9 mm diameter | Wall: E120/EI90 - Floor: EI60 | Wall/Floor: EI120 |
| | Combustible pipes with max. 50 mm diameter | Wall: EI120 - Floor: EI60 | Wall/Floor: EI120 |

For detailled information please refer to ETA 17/0845. Remaining space around penetrants can be filled with FBB FireStop Block.

# Intumescent Pipe Wraps FiPW

An intumescent single or endless wrap for sealing flammable pipes



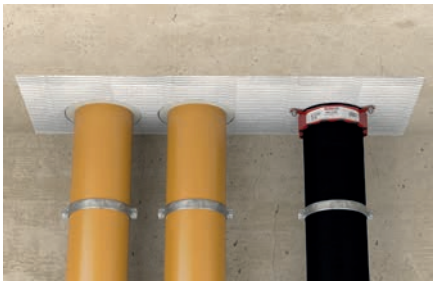

Combustible pipes floor application



Combustible pipe wall application

## Applications

- Non-metallic pipes
- Polyvinyl Chloride PVC
- Chlorinated Polyvinyl Chloride cPVC
- Medium-density Polyethylene MDPE
- High-density Polyethylene HDPE
- Acrylonitrile Butadiene ABS

## Advantages

- Efficient and effective for sealing of pipe openings in floors and walls
- Easy to fit
- Moisture resistant
- No mechanical fixing required
- Economical solution
- Up to 2 hours fire resistance
- Asbestos and halogen free
- Available on a roll for more flexibility in pipe diameters

## Certificates

**ETA-21/1061**

EN 1366-3

## Building materials

Test Building Materials Print

## Functioning

- FiPW is a flexible composite strip, which is composed of thermoplastic component containing intumescent graphite in a synthetic compound and enclosed in an outer polyethylene cover.
- Can also be used as a cast-in solution. For large openings, use in conjunction with FCPS or FFSC.

## Installation FiPW

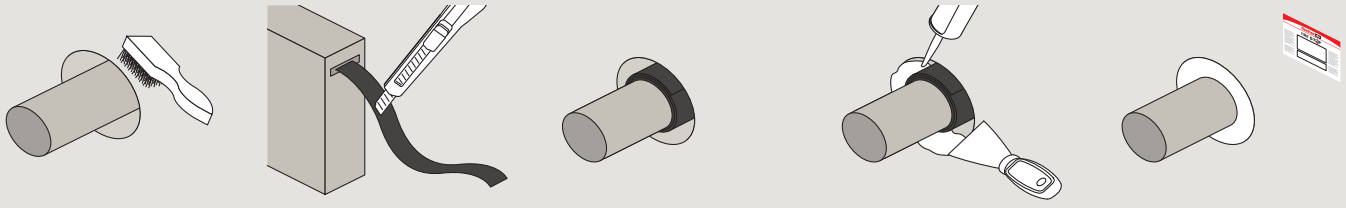

## Installation FiPW with FCPS

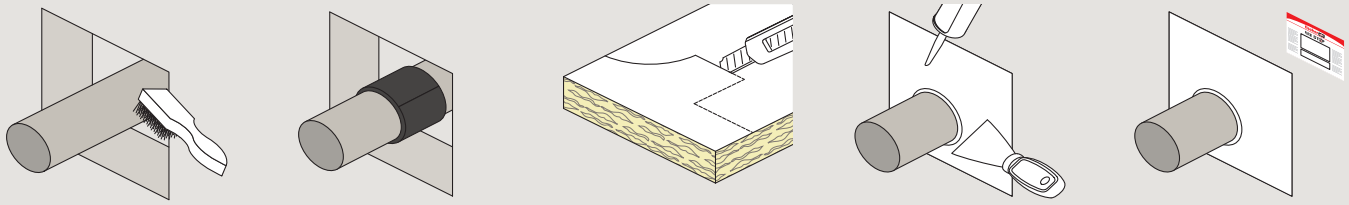

## Technical data

| Item | Item no. | Approval ETA | Fits pipe-Ø [mm] | Fire rating [hours] | Sales unit [pcs] |
|---|---|---|---|---|---|
| **FiPW E / 2 mm (25 meter roll)** | **539608** | ● | 30 - 250 | up to 2 | 1 |
| **FIPW 2/30-32** | **052546** | – | 30 - 32 | 2 | 1 |
| **FIPW 2/38-40** | **052547** | – | 38 - 40 | 2 | 1 |
| **FIPW 2/55** | **052548** | – | 55 | 2 | 1 |
| **FIPW 2/63** | **052560** | – | 63 | 2 | 1 |
| **FIPW 2/75** | **052561** | – | 75 | 2 | 1 |
| **FIPW 2/82** | **052562** | – | 82 | 2 | 1 |
| **FIPW 2/110** | **052563** | – | 110 | 2 | 1 |
| **FIPW 2/125** | **052890** | – | 125 | 2 | 1 |
| **FIPW 2/160** | **052891** | – | 160 | 2 | 1 |
| **FIPW 2/200** | **053000** | – | 200 | 2 | 1 |

## Technical data

| | |
|---|---|
| State | solid |
| Colour | black inner component in outer foil carrier |
| Odour | odourless |
| Density | 1.3 kg/m³ |
| Expansion ratio | 1 : 25 |
| Significant expansion occurs at temperature | > 180 °C |
| Storage temperature | + 5 °C to + 35 °C |
| Thickness | 2 mm |
| European Technical Assessment | ETA-21/1061 |
| CE marking | 2531-CPR-CX010326 |

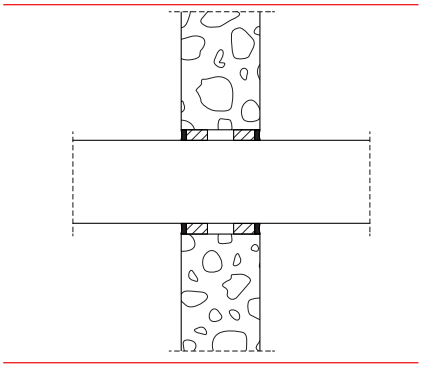

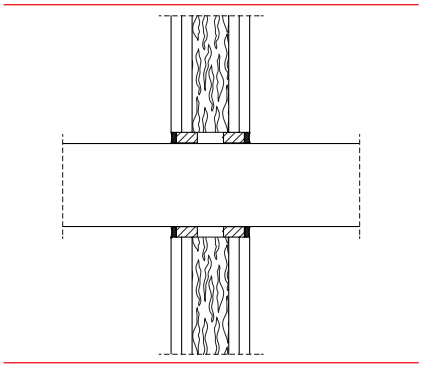

## Application data

| Configuration for up to 120 min. | | | |
|---|---|---|---|
| Outer pipe diameter [mm] | No. wraps | Thickness | Length per stacks [mm] |
| 40 | 1 | 2 | 138 |
| 55 | 2 | 4 | 383 |
| 63 | 2 | 4 | 434 |
| 75 | 2 | 4 | 509 |
| 82 | 2 | 4 | 553 |
| 90 | 3 | 6 | 923 |
| 110 | 3 | 6 | 1112 |
| 125 | 4 | 8 | 1696 |
| 160 | 4 | 8 | 2136 |
| 200 | 5 | 10 | 3331 |
| 250 | 7 | 14 | 5846 |

# Intumescent Wrap Strip FiWS

Universal intumescent wrap strip for sealing combustible services




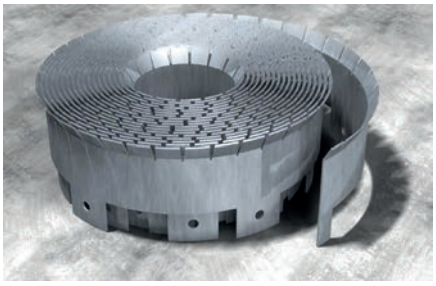

Universal Collar 2

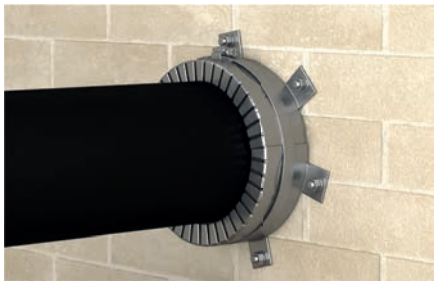

Combustible pipe application

## Applications

- Non-metallic service: PVC 14“ (355 mm), cPVC 8“ (203 mm), ABS 6“ (152 mm), FRPP 4“ (102 mm)
- Insulated service: Steel 10“ (254 mm), Iron 10“ (254 mm), Copper 4“ (102 mm), Glass fibre 3“ (75 mm), AB/PVC flexible foam 1“ (25 mm)
- Cable bunches: 3“ (76 mm)

## Advantages

- Efficient and effective for sealing of pipe openings in floors and walls
- Easy to fit
- Moisture resistant
- Freeze-thaw characteristics
- No mechanical fixing required
- Economical solution
- Up to 4 hours fire resistance
- Asbestos and halogen free

## Certificates

ASTM E 814 (UL 1479)
ASTM E 84 (UL 723)

## Functioning

- FiWS is a flexible, intumescent graphite-based synthetic compound strip, which has been designed to be installed in both vertical and horizontal applications.
- FiWS has been developed as a PRE or cast-in FireStop solution, and has been designed to work with the fischer Universal Collar for retro fitting or surface mounted applications.
- For large openings, the FiWS can be used in conjunction with the FFSC.

## Installation FiWS with FFSC

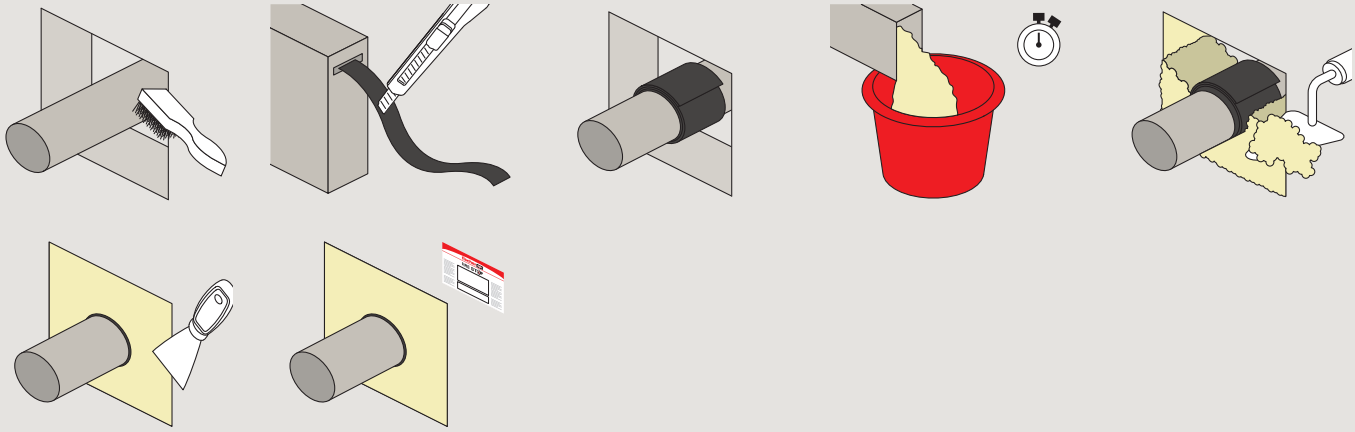

## Technical data

| Item | Item no. | Dimensions B x L x H | Sales unit [pcs] |
|---|---|---|---|
| **FiWS-2** | **531397** | 50 mm x 6 mm x 5.48 m / 2˝ x 1/4˝ x 18˝ | 1 |
| **Universal Collar 2** | **536053** | 51 mm x 15 m / 2“ x 50 ft | 1 |

## Technical data

16

| | |
|---|---|
| State | - |
| Odour | - |
| Density | - |
| Expansion ratio | - |
| Significant expansion occurs at temperature | - |
| Max. recom. pipe-ø | - |
| Flame spread (ASTM E 84 - UL723) | - |
| Smoke index (ASTM E 84 - UL723) | - |
| Colour | - |

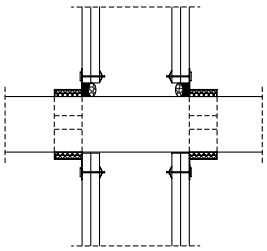

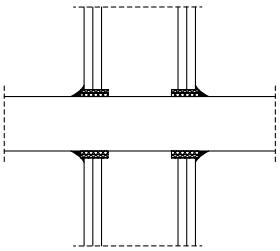

Both sides of the wall

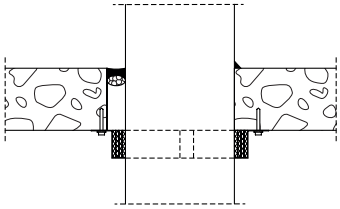

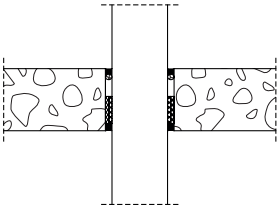

Botttom of floor

## Application data

| FiWS - typical configuration | | |
|---|---|---|
| **Pipe diameter [mm]** | **No. of layers** | **Length per stacks [mm]** |
| 50 | 1 | 200 |
| 75 | 2 | 580 |
| 100 | 2 | 740 |
| 150 | 3 | 1640 |
| 200 | 4 | 2890 |
| 305 | 4 | 4210 |

# Fire Collar FFC

Collar for sealing a wide range of combustible pipes where passing through fire rated walls and floors






Combustible pipe floor application



Combustible pipe wall application

## Applications

- Non-metallic pipes like PVC, HDPE, MDPE, ABS of various sizes through fire rated walls and floor assemblies

## Advantages

- Easy retrofit at any time
- Water resistant
- No minimum annular service required
- Pre-fixed attachment lugs
- Fold back tag for secure fixture around pipe

16

## Certificates

ETA-20/1066

EN 1366-3

## Building materials

- Flexible and rigid wall constructions
- Solid concrete floors
- Hollow precast floors

## Functioning

- FFC is a powder coated cylindrical steel sleeve, which contains a heat reactive graphite-based intumescent material that expands during fire.
- Designed to be securely fitted around the pipe and held in position with a retaining bolt.
- Any gaps up to 10 mm around FFC should be backfilled with FiAM or larger annular space should be closed with FCPS or FFSC.

## Installation FFC with FCPS

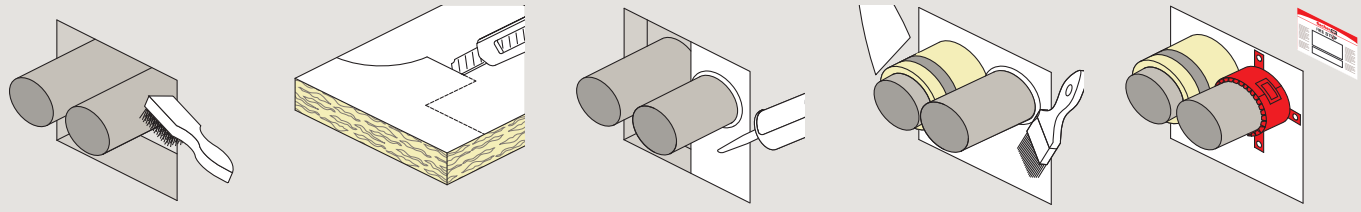

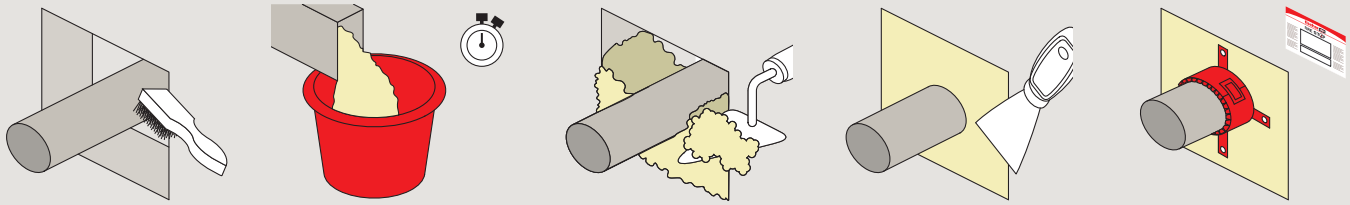

## Technical data

| Item | Item no. | Approval ETA | Fits pipe-Ø [mm] | Sales unit [pcs] |
|---|---|---|---|---|
| **FFC 2/30-32** | **052456** | ● | 30 - 250 | 1 |
| **FFC 2/38-40** | **052480** | ● | 38 - 40 | 1 |
| **FFC 2/55** | **052481** | ● | 55 | 1 |
| **FFC 2/63** | **052482** | ● | 63 | 1 |
| **FFC 2/75** | **052483** | ● | 75 | 1 |
| **FFC 2/82** | **052486** | ● | 82 | 1 |
| **FFC 2/90** | **052487** | ● | 90 | 1 |
| **FFC 2/110** | **052488** | ● | 110 | 1 |
| **FFC 2/125** | **052489** | ● | 125 | 1 |
| **FFC 2/160** | **052500** | ● | 160 | 1 |
| **FFC 2/200** | **052501** | ● | 200 | 1 |



## Technical data

| | |
|---|---|
| State | solid |
| Odour | odourless |
| Fire resistance | up to 4 hours |
| Available sizes | > 30 mm and max up to 200 mm |
| Significant expansion occurs at temperature | > 180 °C |
| Storage temperature | N/a |
| Colour | black inner component in outer red carrier |
| European Technical Assessment | ETA-20/1066 |
| CE marking | 2531-CPR-CX010322 |

# Intumescent Pillows FiP

FireStop solution for temporary and permanent service penetrations in vertical and horizontal applications





Electrical floor application



Electrical wall application

## Applications

- Metal pipes
- Cables/cable trays
- Electrical trunking
- Electrical trunking: for conformance with the 17th Edition of the IEE Wiring Regulations (BS 7671:2008)

## Advantages

- Approved as permanent fire barrier
- Reusable
- Dry installation
- Quick and easy installation
- No shelf life
- Moisture resistant
- Up to 2 hours fire protection

## Certificates

**ETA-20/1063**

BS 476-20
EN 1366-3
EN ISO 10140-3:1995

## Functioning

- FiP is an intumescent graphite and mineral fibre blend covered in a glass fibre PVC coated cloth bag.
- FiP is suitable for applications where temporary and permanent fire barriers are required.

## Installation FIP - Wall application

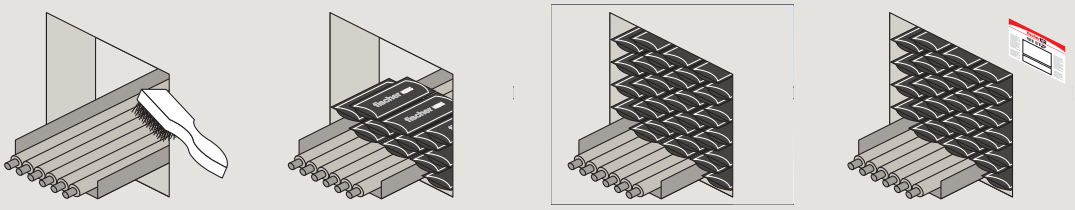

## Installation FIP - Floor application

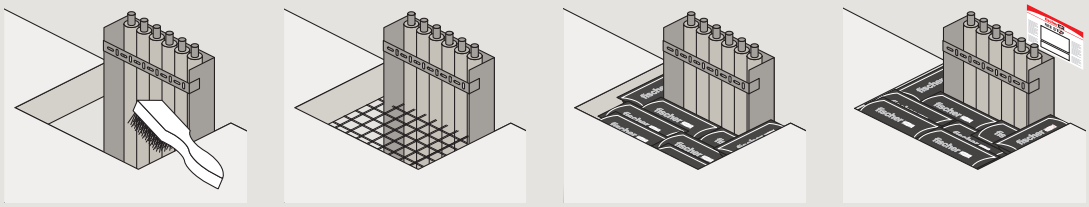

## Technical data

| Item | Item no. | Approval ETA | Dimensions [mm] | Weight per pillow [g] | Sales unit [pcs] |
|---|---|---|---|---|---|
| **FiP/S** | **516960** | ● | 330 x 50 x 20 | 80 | 1 |
| **FiP/Std** | **533890** | ● | 330 x 100 x 20 | 120 | 1 |
| **FiP/M** | **516959** | ● | 330 x 200 x 25 | 230 | 1 |
| **FiP/L** | **516958** | ● | 330 x 200 x 45 | 420 | 1 |

## Technical data

| | |
|---|---|
| State | - |
| Odour | - |
| Expansion | 3 times |
| Significant expansion occurs at temperature | > 140 °C |
| European Technical Assessment | ETA-20/1063 |
| CE marking | 2812-CPR-JA5046 |
| Colour | black |



## Estimation quantities

| Width | Length [mm] | | | | | | | | | | | | |
|---|---|---|---|---|---|---|---|---|---|---|---|---|---|
| | Size | Large | Medium | Large | Medium | Large | Medium | Large | Medium | Large | Medium | Large | Medium |
| [mm] | Seal type | 100 | 100 | 300 | 300 | 500 | 500 | 700 | 700 | 900 | 900 | 1,000 | 1,000 |
| **200** | **Wall** | 3 | 5 | 7 | 13 | 12 | 22 | 17 | 31 | 21 | 39 | 24 | 47 |
| | **Floor** | 2 | 3 | 4 | 7 | 6 | 12 | 9 | 17 | 11 | 22 | 12 | 27 |
| **400** | **Wall** | 5 | 9 | 14 | 26 | 24 | 44 | 33 | 61 | 42 | 78 | 47 | 95 |
| | **Floor** | 3 | 5 | 7 | 15 | 12 | 24 | 17 | 34 | 22 | 43 | 24 | 52 |
| **600** | **Wall** | 7 | 13 | 21 | 39 | 35 | 65 | 49 | 91 | 63 | 117 | 70 | 143 |
| | **Floor** | 4 | 7 | 11 | 22 | 18 | 36 | 25 | 51 | 33 | 65 | 36 | 79 |
| **800** | **Wall** | 9 | 18 | 28 | 52 | 47 | 87 | 66 | 122 | 84 | 157 | 94 | 192 |
| | **Floor** | 5 | 10 | 15 | 29 | 24 | 48 | 34 | 67 | 33 | 87 | 48 | 107 |
| **1000** | **Wall** | 10 | 22 | 35 | 65 | 59 | 109 | 82 | 152 | 105 | 196 | 117 | 217 |
| | **Floor** | 6 | 12 | 18 | 36 | 30 | 60 | 42 | 84 | 54 | 108 | 60 | 120 |

# Coated Panel System FCPS

FireStop coated panel system for multiple service penetrations





Mixed penetration through the floor



Mixed penetration through the wall

## Applications

- Small and large openings
- Cables/cable trays
- Air ducts with dampers
- Metallic or non-metallic pipes

## Advantages

- Approved for light partition walls
- Can be installed dry
- No coatback required for services
- Excellent acoustic properties
- Asbestos and halogen free

16

## Certificates

**ETA-20/1067**
**ETA-20/1065**
**ETA-20/1064**
**ETA-20/1062**
ISO 10140
EN 1366-3

## Functioning

- FCPS is a rock fibre core coated with ablative sealant FPC for use in both vertical and horizontal applications.
- It maintains the sound reduction index of a structure.
- The FCPS will allow additional services to be added or removed and will accommodate thermal and mechanical movement of services.
- FPC can be used to adhere sections of FCPS board when jigsaw assembly is required and can also be used to enhances smoke and acoustic performance.

## Installation FCPS

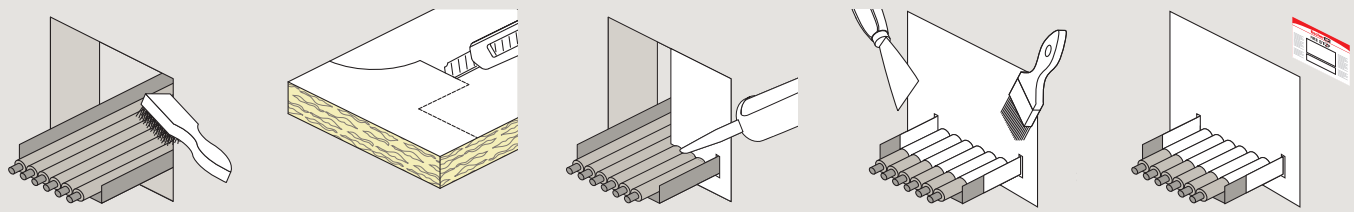

## Technical data

| Item | Item no. | Approval ETA | Dimensions [mm] | Contents [kg] | Contents [ml] | Adapted for | Sales unit [pcs] |
|---|---|---|---|---|---|---|---|
| **FCPS/50** | **053252** | ● | 1200 x 600 x 50 | – | – | – | 1 |
| **FPC/5kg** | **053253** | ● | – | 5 | – | – | 1 |
| **FiAM 310** | **053011** | ● | – | – | 310 | – | 1 |
| **KPM 2 Plus** | **053117** | – | – | – | – | FiAM Plus 310, FFRS 310, UFS 310, FiGM 310 | 1 |
| **FiAM 600** | **056006** | ● | – | – | 600 | – | 1 |
| **FiAM 310** | **538151** | ● | – | – | 310 | – | 1 |
| **FiAM 310** | **538150** | ● | – | – | 310 | – | 1 |
| **FiAM 310** | **538152** | ● | – | – | 310 | – | 1 |
| **FiAM bucket** | **568134** | ● | – | 20 | – | – | 1 |

## Technical data

| | |
|---|---|
| Density | 140 kg/m³ |
| Coating thickness | 1 mm WTF |
| Fire resistance | Depending on application |
| Accoustic performance | 27 dB |
| Thermal conductivity | 0,034 W/mK at 10 °C |
| Maximum size of seal | Wall 6,76 m², floor 1,65 m² |
| Maximum size unsupported | 1.2 x 1.2 m |
| Density of panel coating FPC | 1.25 - 1.375 g/cm³ |
| Panel coating FPC coverage | approx. 1,6 kg/m² l/m² |
| Shelf life of panel coating FPC Art.-No. 53253 | 12 months |
| European Technical Assessment | ETA-20/1062, ETA-20/1067 |
| CE marking | 2531-CPR-CX010319, 2531-CPR-CX010329 |

## Application data

| Services | Rigid partition walls [Fire rating - hours] | Flexible partition walls [Fire rating - hours] | Concrete floors [Fire rating - hours] |
|---|---|---|---|
| **Cable ladder/tray/basket** | Up to 2 | Up to 2 | Up to 2 |
| **Cables up to 26 mm diameter** | Up to 2 | Up to 2 | Up to 2 |
| **Cables up to 80 mm diameter** | Up to 2 | Up to 2 | Up to 2 |
| **Steel/Copper pipes up to 159 mm diameter** | Up to 2 | Up to 2 | n/a |
| **PVC pipes* up to 110 mm diameter** | Up to 1 | Up to 1 | n/a |
| **Blank seals** | Up to 2 | Up to 2 | Up to 2 |

* PVC Pipes must be protected in conjunction wit h FiPW, which must be securely sealed in place wit hin the FCPS.

# FireStop Compound FFSC

Structural fire resistant seal for floors and walls






Mixed penetration through the floor



Mixed penetration through the floor

## Applications

- Metallic services with steel and cast iron pipes
- Non-metallic services with FiPW intumescent pipe wrap or FFC pipe collar
- Voids or cavities in floors or walls
- Cable bunches

## Advantages

- Water based
- Low VOC
- Load bearing
- Excellent acoustic proper-ties
- Both vertical and horizontal applications
- Halogen and asbestos free



## Certificates

**ETA-21/0678**

EN ISO 10140
EN 1366-3
ASTM E 814 (UL 1479)

## Functioning

- FFSC is a specially formulated gypsum based compound, which when mixed with water can be trowelled or poured.
- FFSC can provide up to 4 hours integrity and insulation.
- Set within 45 min depending on ambient temperature.
- Capable of accommodating foot traffic within 72 hours.

## Installation FFSC - Floor application

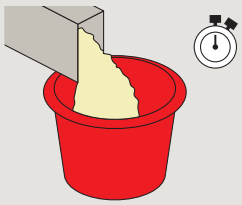

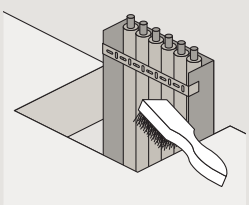

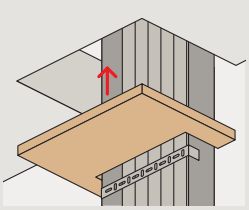

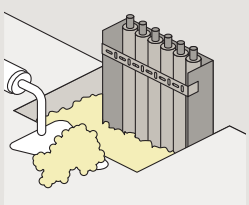

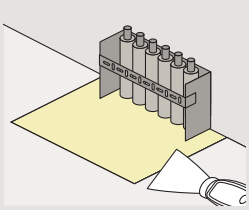

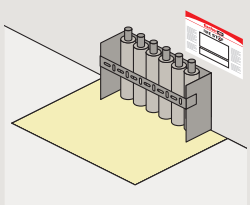

## Installation FFSC - Wall application

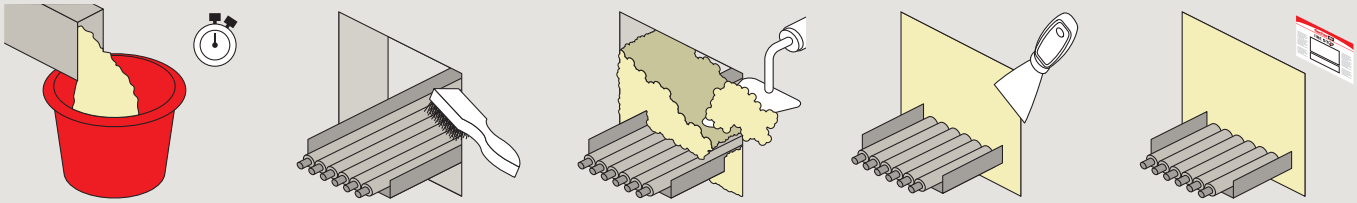

## Technical data

| | Item no. | Approval ETA | Contents [kg] | Sales unit [pcs] |
|---|---|---|---|---|
| **Item** | | | | |
| **FFSC/20 kg** | **533247** | ● | 20 | 1 |

## Technical data

| | |
|---|---|
| Base material | Gypsum |
| Bulk density | 950 kg/m³ |
| Wet density | 1,850 |
| Setting time | 20 min |
| Storage temperature | + 5 °C to + 25 °C |
| Accoustic performance | 59 dB |
| Reaction to fire | Class F |
| European Technical Assessment | ETA-21/0678 |
| Tensile strength | 30 N/mm² |
| Thermal conductivity | 0.57 W/mK at 50 %, 0.65 W/mK at 90 % |
| Colour | off white |

## Application data

| | By volume<br>Powder to water ratio |
|---|---|
| **Pourable grade** | 2.5 : 1 |
| **Trowelable grade** | 3 : 1 |

* These are approximate calculations based on 20 kg bags. The coverage does not take into account the percentage of the hole filled with services.

** As a further safety margin, we would recommend that all floor seals with clear areas greater than 1,100 mm x 1,100 mm mus t be reinforced.

Load bearing note: the open area free of services: Thickness of seal ratios for non-reinforced seals given above allow an ample safety margin for normal foot traffic, e.g., loads of two men plus equipment with a combined weight up to 200 kg.



# 17
# Basics – good to know.


| | |
|---|---|
| Maintenance groups for mounting pipe installations | 582 |
| Product solutions with examples | 582 |
| Elongation | 584 |
| Soundproofing | 585 |
| Corrosion protection | 586 |
| Fire protection | 588 |
| Product overview with proof in inspection reports and advisory opinions | 589 |
| Fixings in the technical building equipment | 590 |
| Load tables based on the advisory opinions | 594 |
| Fixing of sprinkler systems | 598 |
| Mounting gas pipe | 599 |
| Seismic and dynamic | 600 |
| Dimension and weights of pipes | 601 |
| Important dimensions, variables and units | 607 |
| Approvals, markings and their importance | 608 |
| Services | 611 |
| Subsidiaries | 612 |

# Maintenance groups and applications for mounting pipe installations.

The mounting of pipe installations, distribution systems and devices in various types of buildings, as well as industrial plants and processes are combined under the umbrella term, installation systems.
fischer Installation Systems is a complete range including the relevant supplementary products, in particular plugs and anchors.

The following belong to the maintenance groups which install pipes:
- Heating, ventilation and cooling systems
- Plumbing
- Sprinklers - extinguishing systems
- Electrical installations (medium and low voltage)
- Water and waste water treatment
- Energy and water supply

**Through these maintenance groups, different pipe installations, which are offered by the Installation Systems product range, are created:**
- Heating and cooling pipes
- Steam pipes
- Ventilation ducts and ventilation pipes
- Drinking water and service water pipes
- Waste water and drainage water pipes
- Sprinkler pipes
- Gas and compressed air pipes
- Medical gas supply
- Process pipes for gases and liquids
- Water and waste water treatment
- Energy and water supply



# Product solutions with examples.

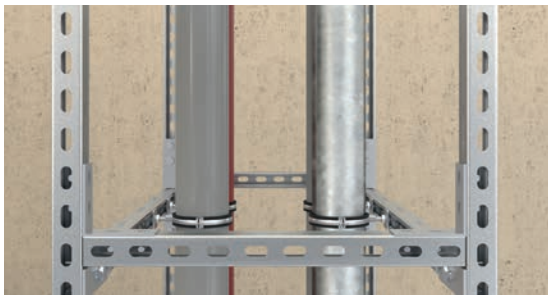

**Installation shaft with FUS channel system**
Through the distinctive interlocking of the channels for the channel nuts FCN Clix P or PFCN, the FUS channel system provides a secure grip for handling high shear loads.

Also the first choice for pipe line routes due to the greater stability.



**Cantilevers for different load ranges**
With centred load (load case 1), the load range of the brackets is between 0.33 kN (33 kg) and 7.5 kN (750 kg).

Lightweight cantilevers in the FLS system: ALK
Medium cantilevers in the FUS system: FCA
Massive cantilevers in the FUS system: FCAM

# Product solutions with examples.



**Pre-assembled construction elements**
The pre-assembled construction elements MW Clix 90° und SF Clix 31 guarantee for a time saving installation.

The time saving in comparison to the usual U-profile file system is around 70 %.

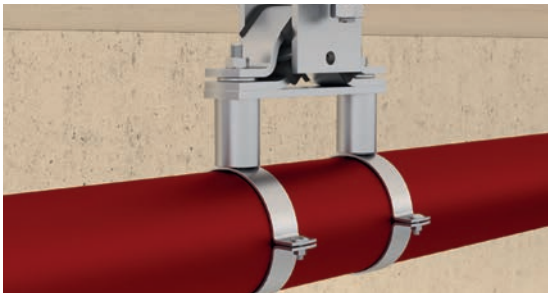

**Fixed points and sliding elements**
Sound insulation requirements for fixed points: FSFP anchor point
For all standard cases: The FFP or FFS fixed point sets with the FFPC fixed point clamp or FFRC refrigeration fixed point clamp ensures controlled movement in one direction: Sliding elements (see instructions on this under Elongation).



**Refrigerant pipe clamps with integrated steel bracket**
Different requirements for insulating layer thicknesses and the prevention of condensation are the basic requirements for a refrigerant pipe clamp.

The KFT refrigerant pipe clamp allows neat bonding for insulating layer thicknesses of up to 30 mm, 40 mm or 60 mm.



**Sprinkler loop with VdS and FM approval**
Sprinkler systems are created according to the requirements of property insurers. The association of property insurers, VdS and FM global, testing products and give approvals for installation in water extinguishing systems. The FRSMN, FRLH and FRSP sprinkler clamp are approved sprinkler clamp or loops.

See also Mounting sprinkler installations.

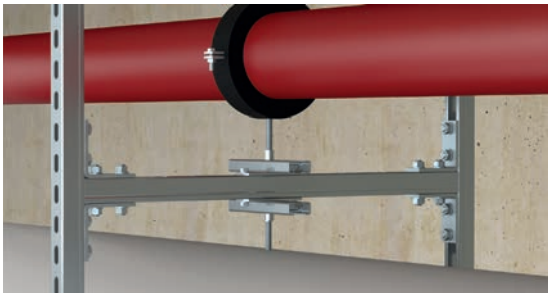

**Channel connection - which loads are relevant?**
In the design of supports or similar components for mounting pipe installations, the load of the connecting element, such as a hammer-head screw (e. g. FHS Clix S) or channel nut (e. g. FCN Clix P) is decisive for the connection with a angle bracket, for example. The load information is shown for one element but can be doubled when using two elements. (see example on the left side).

# Elongation.



Materials expand with heat. For long components, the change in length is mainly considered. So it is not always a matter of expansion. Shrinkage upon cooling is to also be included in the calculation. This is important when installing pipes. Within piping, the change in length is to be specifically steered. Not doing this during installation results not only in pipe defects, but also in serious damage to components. It is therefore essential to determine how great the change in the length of a pipe can be.

For this purpose, the pipe length and the expansion coefficient of the pipe material, as well as the expected temperature difference, must be known. This is to be determined such that not only the normal operating temperatures, but also the maximum temperatures that can arise in a case of malfunction, are taken into account. The range is therefore from around 10 °C assembly temperature up to 95 °C service temperature for water filled systems.



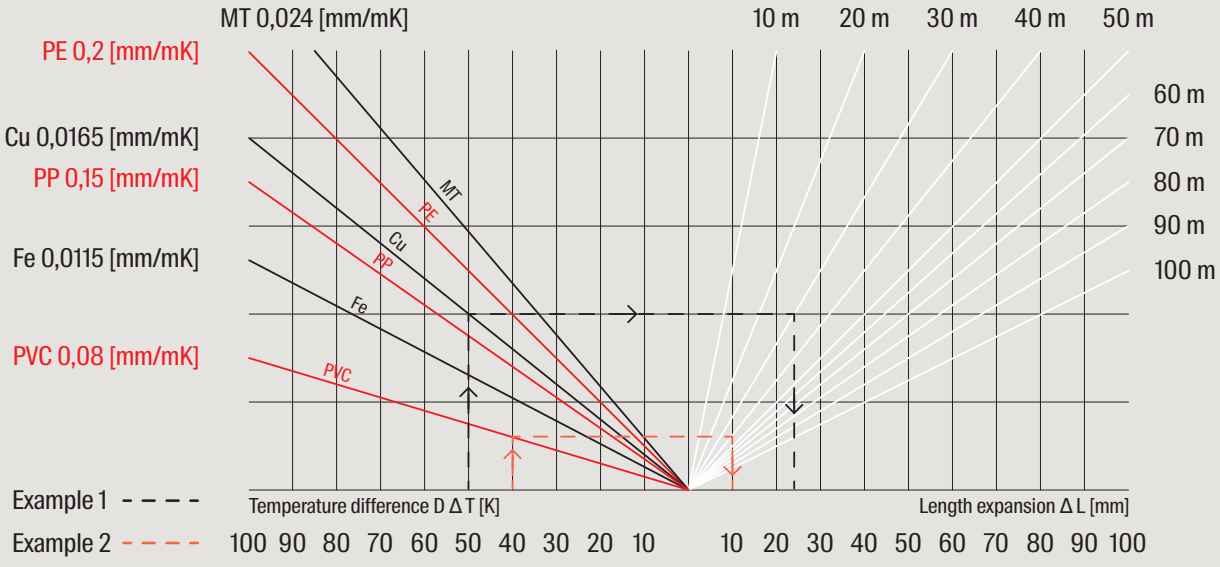


Note: For plastic pipes (PE, PP, PVC), the length expansionread from the diagram is to be multiplied by a factor of 10.

Copper pipe, Cu – Length of pipe span 30 m
Temperature difference ΔT = 50 K
Length expansion Δ L= 24,75 mm

PVC pipe – Length of pipe span L = 40 m
Temperature difference Δ T = 40 K
Length expansion Δ L = 128 mm (table value x 10)

Length expansion calculation formula
$\Delta L = L \times \Delta T \times \alpha$
[mm] [m] [K] [mm/m K]

Δ L=Change in length
L= Length of the pipe span/section
Δ T = Temperature difference
α = Length expansion coefficient

# Soundproofing.

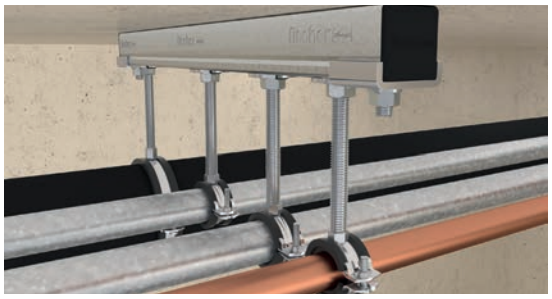

**As defined in the appropriate standards, the goal of soundproofing is to reduce the transmission to other apartments or usage areas to a given noise range. The upper limits for permissible residual noise levels are defined in the standards.**

**Soundproofing - VDI 4100**
In principle, the VDI 4100 values are, among other things, protection against noise from building systems that are mounted in the neighbouring area. According to VDI 4100, living areas are rooms that are in need of protection; in apartments, these are all rooms with a floor space of > 8m2. This includes kitchens, bathrooms, toilets, hallways and ancillary rooms. VDI 4100 further recommends agreeing with the contracted companies the sound insulation values SSt EB I = 35 dB or SSt EB II = 30 dB for noise emerging from one's own area. Exceptions to this are all sounds that are influenced by the residents, i.e. self-installed air conditioners in the apartment or noises from flushing toilets, etc.

**Soundproofing - DIN 4109**
The DIN 4109 from 2016-07 still supplemented by A1 (2001-01), in which the permissible sound pressure level in living and sleeping areas for noise from building installations was reduced from 35 to 30 dB(A). The standard is not applicable to the protection against noise from building installations in one's own living area, but only to sounds coming from "external" areas as defined in VDI4100. For increased sound insulation, DIN 4109 Addendum 2 (from 1989) specifies a reduction in the permissible values by 5 dB(A) (to 25 dB(A)) as effective for noises from building installations.

**Soundproofing - important influential factors for pipe mounting**
Sound propagates in vibrations. These sound waves can propagate in solid, liquid and gaseous media, where the speed of this sound propagation differs greatly in the various media. So the sound in pipe installations is primarily forwarded through the pipeline itself and not through the carried medium.

Transmission over the metal pipe is faster than in water, for example. In welded heating systems, for example, the individual sounds of striking a pipe can propagate throughout the entire building. The sound waves are transmitted in a medium in that the molecules constantly jolt one another, thereby transmitting the wave. Steel pipes or metallic mounting elements have an ordered metallic lattice, wherein forwarding is faster and with less loss than in amorphous materials, such as rubber (general elastomers). It can thus be determined that an inversely proportional relationship exists between the speed of sound [symbol; c] and the insulating behaviour of materials. That is, materials with a low sound speed always have better insulating properties than materials with a high sound speed (steel c = 5100 m/s). Rubber (c ~40 m/s) is therefore eminently suitable for sound insulation.
In rubber, the sound waves stop dead, so to speak, wherein the energy is converted into heat.

Therefore, the sound isolation must in principle occur between the pipes and the structure. Here, we recommend the installation of a sound insulating element as close to the sound source as possible; in the simplest case, with an insulating insert in the pipe clamp itself. Sound tested pipe clamps by fischer FGRS Universal hinged clamp, FRS pipe clamp and FRS-L Universal pipe clamp.

# Corrosion protection.

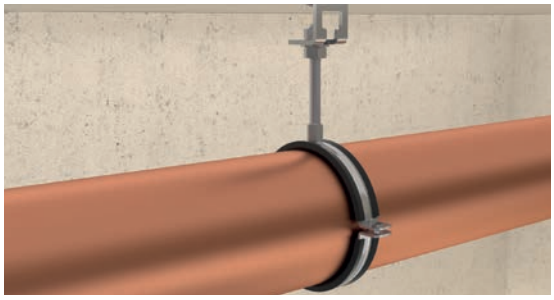

In most cases, pipes and supply lines are installed in dry rooms. Therefore, in addition to corrosion resistant materials, such as plastics or stainless steel and copper, the steel products used for installation systems are galvanised. A zinc coating thickness of 5-8 µm by means of electrolytic process (galvanising) is standard. For mounting channels, Sendzimir galvanised material is mainly used. Sendzimir galvanising is a method in which the material is drawn through a molten zinc bath, thereby achieving a zinc layer thickness of 12-20 µm. This method is used when there is no more welding for the subsequent processing. This is the case for mounting channels because they are cold-formed after galvanising.
By cutting and stamping the holes, the surface in this area is not completely covered by a protective layer. Punched mounting channels are therefore only recommended for the dry interior rooms.
For cantilever brackets, non-galvanised channel pieces are used which are welded to the base plate. Following completion, the entire component is galvanised, creating a zinc coating thickness of 5-8 µm.

Threaded parts are either galvanised or made of stainless steel. Hot-dip galvanising is less suitable for this because the large zinc layer thickness of 40-150 µm severely impairs the thread engagement.
If installation systems are installed outdoors or in wet interior rooms, they must be made of either hot-dip galvanised steel or stainless steel.

Hot-dip galvanising is very well suited to the protection of steel. The corrosion process is thus 10 times slower than with galvanising. The zinc loss depends on the surrounding atmosphere and humidity. An annual zinc reduction of 1–10 µm can, however, be assumed. The layer thickness is therefore crucial to the durability of the material.

Crucial here are the environmental influences under which the systems are installed. An overview of the expected impact on the protective action can be seen in the following diagram and tables.

Hot-dip galvanised steel

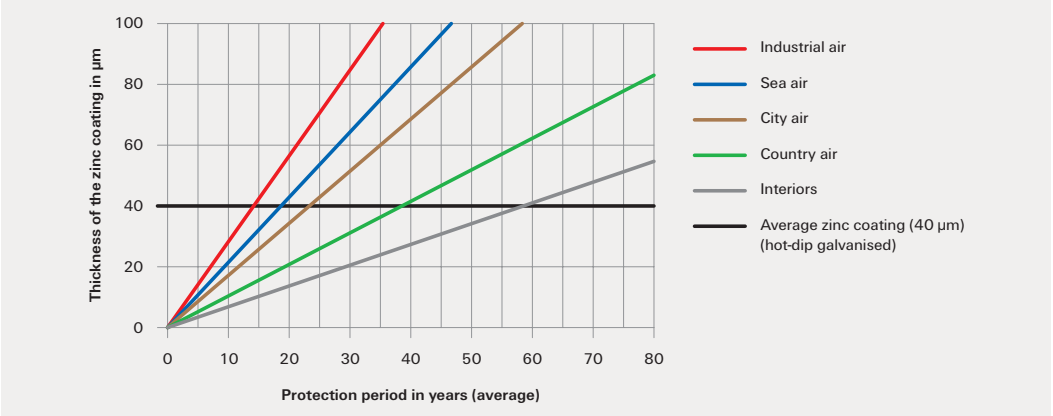

| Stainless steel | | | | | | |
|---|---|---|---|---|---|---|
| Steel Grade | | | | | Corrosion | |
| Material No. | Short Name | AISI | UNS | Designation of the Steel Group with | Resistance Class | Exposure and Typical Applications |
| 1.4305 | X8CrNiS18-9 | 303 | S 30300 | A1 | I/light | Indoor climate except damp location. |
| 1.4301 | X5CrNi18-10 | 304 | S 30400 | A2 | II/moderate | Accessible constructions without nameable content of chlorides or sulfur dioxide, except industrial atmosphere. |
| 1.4307 | X2CrNi 18-9 | 304L | S 30403 | A2L | II/moderate | Accessible constructions without nameable content of chlorides or sulfur dioxide, except industrial atmosphere. |
| 1.4362 | X2CrNiN23-4 | 324 | S32304 | A4 | III/medium | Constructions with moderate chloride and sulfur dioxide exposure and inaccessible constructions. |
| 1.4401 | X5CrNiMo17-12-2 | 316 | S 31600 | A4 | III/medium | Constructions with moderate chloride and sulfur dioxide exposure and inaccessible constructions. |
| 1.4404 | X2CrNiMo17-12-2 | 316 L | S 31603 | A4L | III/medium | Constructions with moderate chloride and sulfur dioxide exposure and inaccessible constructions. |
| 1.4571 | X6CrNiMoTi17-12-2 | 316 Ti | S 31635 | A5 | III/medium | Constructions with moderate chloride and sulfur dioxide exposure and inaccessible constructions. |
| 1.4529 | X1NiCrMo-CuN25-20-7 | – | N 08926 | 1.4529 | IV/strong | High corrosion exposure due to chlorine, chloride and/or sulfur dioxide, high humidity as well as accumulation of hazardous substances. |

# Fixings in the technical building equipment.

## Fixing product:

A key element in the installation of media lines is the anchor product, which ultimately forms the connection between the component and the building. A secure hold is ensured by sizing each application or project according to specific parameters. The interaction of the fixing product, such as plugs, anchors and screws, with the building material and the nature and extent of the load to which it is subjected is critical. The type of installation, such as push-through or push-in, also influences the choice of fastener. In addition, the components to be fastened can be very different in terms of the type of fastener used. For example, a mounting thread may be an internal or external thread, or a perforation in a base plate or lug. In addition, there are sometimes more stringent installation requirements. These may include the need to demonstrate fire resistance of pipework or seismic effects. Appropriate anchoring solutions with appropriate qualifications are essential.

## Requirements of the building law:

CE marking, based on European Technical Assessments (ETAs) and harmonised European standards, provides the basis for product conformity and marketability. However, the European Construction Products Regulation (CPR) does not cover the fixing of installations in building services in its product areas. Similarly, harmonised standards or guidelines for the preparation of ETAs only exist for some areas. This is also due to the fact that cable installations are not covered by the basic requirements for buildings, in particular the requirement for mechanical strength and stability of the building.
However, the building regulations with the additional technical building regulations still apply. The following categories of requirements can be derived from this:

1. Cable and device fixings without special requirements. In this case the requirements result from the loads of the cables or devices.
2. Equipment and component fixings based on a requirement in a national approval or declaration of performance/CE marking of a product:
   a. Fixing of a fire damper
   b. Fixing of extinguishing systems (e.g. sprinklers)
3. Requirements for the fixing of equipment and cable systems based on other building regulations:
   a. Requirements based on national wiring system regulations (LAR)
   b. Requirements according to the guideline on fire protection requirements for ventilation systems of the federal states (LüAR).

For categories 2 and 3, fire resistance period qualifications or approvals from insurers such as FM Factory Mutual or VdS Schadenverhütung are generally required. With the creation of a European Assessment Document (EAD), the Construction Products Regulation offers the possibility of serving as a basis for ETAs for installation systems in the future.

## Fixing for installations

For practical purposes, the way in which cable systems are fixed should be categorised as follows:

1. Fixing directly to the substrate (wall or ceiling)
   a. Single fixing
   b. Row fixing with mounting rails
2. Suspended from the ceiling
   a. Single fixing
   b. Row fixing with rail constructions
3. Raised mounting
   a. Single fixing
   b. Multiple fixing with mounting rail constructions

As the cables generally connect the anchorage points, despite the individual anchorage points, this is a 'multiple anchorage' as failure of one anchorage point will not result in failure of the whole anchorage. Products with such ETAs are also suitable for use in cracked concrete and can therefore be used in the same way as risk resistant anchors.





## Installation types

Three types of installation fixing are important:
1. **Pre-assembly:** The plug or anchor is drilled and inserted before the attachment parts (e.g. threaded rods or hanger screw) are fitted
2. **Push-through installation:** Drilling and anchor installation is carried out using the attachment parts such as brackets, mounting rails or saddle flanges
3. **Distance installation:** usually a push-fit installation with an extended threaded connection. An object can be fixed at a distance from the substrate, for example a pipe fixed vertically to the wall. Particular attention must be paid to the installation of vertical loads (e.g. through the pipework), as the buckling moment is decisive when selecting the fixing materials (threaded rods, etc.).

**Selection of anchoring in the installation technology**

| Installation product (example) | | | Installation type | Anchoring base | | | | Anchoring product (selection) | | |
|---|---|---|---|---|---|---|---|---|---|---|
| | | | |  |  |  | 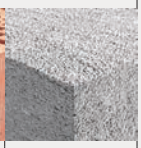 | | | |
| Product image | Type | Application | | Concrete | Solid brick | Perforated brick | Aerated concrete | Diameter [mm] | Fixing | Product image |
|  | Channel FLS |  | Push-through or pre-installation [2] | ●[1] | ●[1] | ●[1] | – | 6 | FBS II 6 |  |
| | | | | ●[1] | ●[1] | ●[1] | ●[1] | 8/10 | SXR/ SXRL 8/10 |  |
|  | Channel FUS | 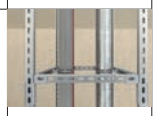 | | ●[1] | ●[1] | ●[1] | – | 10 | FBS II 10 |  |
| | | | | ●[1] | – | – | – | 10/12 | FAZ II Plus 10/12 |  |
| | | | | ●[1] | ●[1] | ●[1] | ●[1] | 8/10 | SXR/ SXRL 8/10 |  |
|  | Cantilever arm ALK, FCA |  | | ●[1] | ●[1] | ●[1] | – | 10 | FBS II 10 |  |
| | | | | ●[1] | – | – | – | 10/12 | FAZ II Plus 10 /12 |  |
|  | Saddle flange SF31, SF, PSF |  | | ●[1] | ●[1] | ●[1] | – | 10 | FBS II 10 |  |
| | | | | ●[1] | – | – | – | 10/12 | FAZ II Plus 10/12 |  |
|  | Variable bracket VB, PVB |  | | ●[1] | ●[1] | ●[1] | – | 10 | FBS II 10 |  |
| | | | | ●[1] | – | – | – | 10/12 | FAZ II Plus 10/12 |  |
|  | Fixed point saddle FFPK |  | | ●[1] | ●[1] | ●[1] | – | 10 | FBS II 10 |  |
| | | | | ●[1] | – | – | – | 10/12 | FAZ II Plus 10/12 |  |
|  | Slider SBS |  | | ●[1] | ●[1] | ●[1] | – | 8/10 | FBS II 8/10 |  |
| | | | | ●[1] | – | – | – | 10/12 | FAZ II Plus 10/12 |  |
|  | Base plate GPL, GPR |  | | ●[1] | ●[1] | ●[1] | – | 6/8 | FBS II 6/8 |  |
| | | | | ●[1] | – | – | – | 8/10 | FAZ II Plus 8/10 |  |
|  | Bracing elements WS31, PSAE |  | | ●[1] | ●[1] | ●[1] | – | 8/10 | FBS II 8/10 |  |
| | | | | ●[1] | – | – | – | 10/12 | FAZ II Plus 10/12 |  |
|  | Bracket MW-U, FAF, PFAF |  | | ●[1] | ●[1] | ●[1] | – | 6 | FBS II 6 |  |
| | | | | ●[1] | ●[1] | ●[1] | ●[1] | 8 | SXR/ SXRL 8 |  |
|  | Slider FSC 1 |  | | ●[1] | ●[1] | ●[1] | – | 8/10 | FBS II 8/10 |  |

**Selection of anchoring in the installation technology**

| Installation product (example) | | | Installation type | Anchoring base | | | | Anchoring product (selection) | | |
|---|---|---|---|---|---|---|---|---|---|---|
| | | | |  |  |  | 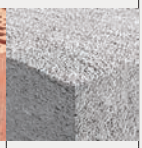 | | | |
| Product image | Type | Application | | Concrete | Solid brick | Perforated brick | Aerated concrete | Diameter [mm] | Fixing | Product image |
|  | Threaded stud /- rod G, GS | External thread as connector for the installation product 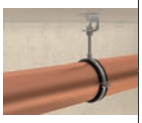 | Pre-installation [3] | ●[1] | – | – | – | 8 | EA II 8 |  |
| | | | | ●[1] | ●[1] | ●[1] | – | 8/10 | FBS II 8/10 |  |
| | | | | ●[1] | ●[1] | ●[1] | – | 8/10 | Duo-Power ETA |  |
|  | Stud screw STST | | | ●[1] | – | – | – | 6/8/10/12/16 | EA Plus 6-16 |  |
| | | | | ●[1] | ●[1] | – | – | 12 | SX |  |
|  | Sliding hanger SB | | | ●[1] | ●[1] | ●[1] | – | 8/10 | FBS II 8/10 |  |
| | | | | ●[1] | ●[1] | ●[1] | ●[1] | 8/10 | FIS V Plus 8/10 |  |
|  | Pipe clamp FRS, FRS-L, FRSM, FGRS, ... | Internal thread as connector 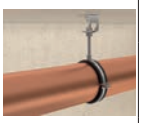 | | ●[1] | ●[1] | ●[1] | ●[1] | 8 | FIS V Plus 8 |  |
| | | | | ●[1] | ●[1] | ●[1] | – | 8/10 | FBS II 8/10 |  |
|  | Hexagonal connector VM | | | ●[1] | – | – | – | 8/10 | FNA II 8/10 |  |
|  | Pendulum hanger PDH/PDH-K | | | ●[1] | – | – | – | 8/10 | FAZ II 8/10 |  |

1) Incl. Assessment
2) Only in perforated sand-lime brick
3) Push-through installation means: the anchoring is installed through the installation product. Pre-installation means: the anchorage is first installed on the free anchor base. The type of installation is described in the ETA and in the installation instructions. Depending on the application, exceptions are possible and can be explained by fischer.

# Fire protection classification.

## Verifications

- Fireproof installations for individual pipes and pipe routes of R30 – R120 and F30 – F120.
- Proof of compliance with the criteria according MLAR (German standard pipe system directive) for installation in escape and rescue routes.

## Fire protection – protection goals:

Firstly, fire protection serves to protect people and is regulated by the building laws in the respective countries (or regional states). Secondly, fire protection serves to protect property. This is regulated by the insurance associations, such as VdS and FM. These requirements partially go beyond the building legislation. This is particularly evident in the installation of fire protection systems, such as sprinklers, etc.. In these cases approved or recognised components must be used (see the fischer catalogues for further details on this).



**Reduction factors $k_\theta$**

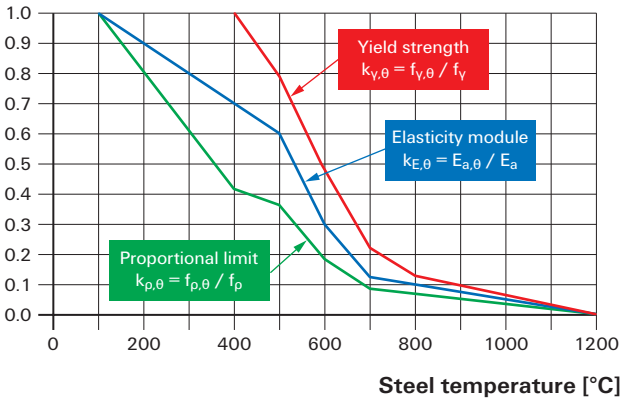


Dependency of the yield strength, proportional limit and elasticity module on the temperature (basis: EN1993-1-2:2012-12 Eurocode 3).

## Test preparation



Fire inspection before.

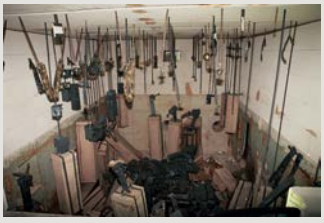

Fire inspection after.

## Fire inspection reports for the installation of pipe clamps and channels:

The fire safety inspection reports described in this brochure meet the requirements for fire protection according to the building regulations of the countries and, especially for Germany, according to the nationwide homonymic German pipe systems directive (LAR), based on the standard pipe systems directive of 2005 (MLAR 2005).
Personal protection is defined in the MLAR Directive through clear rules for escape routes, such as corridors, stairwells, hallways between stairwells and the exit. The key message is to ensure the safety of the escape route by ensuring the functioning of the fireproof sub-ceiling. Therefore a minimum distance of min a ≤ 50 mm according to MLAR is required between installations and underlying suspended fire-proof F30 sub-ceilings (fire resistance of 30 minutes). Based on the fire inspections, load information for a fire resistance of 30 minutes was determined in relation to the maximum permissible deformation of channels or pipe clamps. The necessity for these considerations arises from the properties of steel, which is subjected to a temperature of > 800 °C accor ding to the standard temperature curve (ISO curve).
Additionally, the same information is documented in inspection reports for a fire resistance rating of R30, R60, R90 and R120 according to EN1363-1 and DIN4102-2 (see load tables).

## Fire inspection reports for installation systems - pipe clamps, sliding elements, channel and cantilever arm:

Following “supplementary sheets to inspection reports” from MFPA Leipzig are available:

- PUWF (Document no. GS 6.1/23-006-2)
- FRS (Document no. GS 3.2/14-175-2)
- FUS / FCA (Document no. GS3.2/14-175-4)
- FRS-L Universal (Document no. GS 3.2/15-141-3)
- FLS / ALK (Document no. GS 3.2/15-141-4)
- FASM2 / FASH2 (Document no. GS 6.1/22-066-2)

Additional available “fire inspection reports” from MPA NRW, similar to the above criteria are:

- SB sliding hanger (F120) inspection report no.
- PDH-K pendulum hanger (F120) inspection report no.

**Certificates**

F 30 MLAR F 120 R 30 MLAR R 120

# Product overview with proof in inspection reports and advisory opinions.

| Product | Picture | Document no. | MLAR | R30 - R120 | F30 - F120 |
|---|---|---|---|---|---|
| **FLS 37** |  | MFPA Leipzig – GS 3.2/15-141-4 | ● | ● | – |
| **FUS 41** |  | MFPA Leipzig – GS 3.2/14-175-4 | ● | ● | – |
| **FUS 62** |  | MFPA Leipzig – GS 3.2/14-175-4 | ● | ● | – |
| **ALK 37** |  | MFPA Leipzig – GS 3.2/15-141-4 | ● | ● | – |
| **FCA 41** |  | MFPA Leipzig – GS 3.2/14-175-4 | ● | ● | – |
| **FCA 62** |  | MFPA Leipzig – GS 3.2/14-175-4 | ● | ● | – |
| **PUWF** |  | GS 6.1/23-006-2 | ● | ● | – |
| **FRS-L Universal** |  | MFPA Leipzig – GS 3.2/15-141-3 | ● | ● | – |

| Product | Picture | Document no. | MLAR | R30 - R120 | F30 - F120 |
|---|---|---|---|---|---|
| **FRS** |  | MFPA Leipzig – GS 3.2/14-175-2 | ● | ● | – |
| **SB** |  | MPA-NRW – 210005109-7 | | | ● |
| **FASM 2 M10-12** |  | MFPA Leipzig GS 6.1/22-066-2 | ● | ● | – |
| **FASH 2 M12-16** |  | MFPA Leipzig GS 6.1/22-066-2 | ● | ● | – |
| **PDH-K** |  | MPA-NRW – 210005109-6 | ● | – | ● |



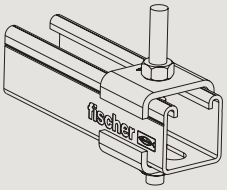


fischer channel washer HK 41 (≥ 10,5mm) or HK 31 (≥ 8,5mm)

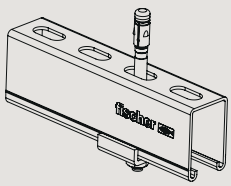


Connection ceiling fischer anchor and fischer channel washer HK 41 (≥ 10,5mm) orHK 31 (≥ 8,5mm)

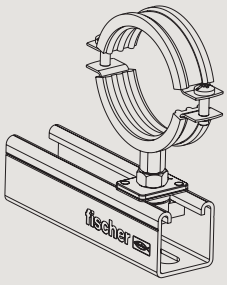


fischer FCN Clix M or FSM Clix M (M8 und M10)

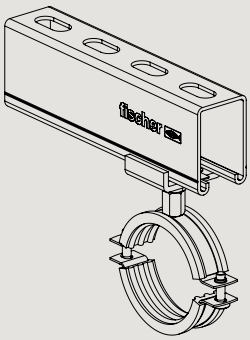


Combination with FCN Clix P or FSM Clix P (M8 oder M10) and HK

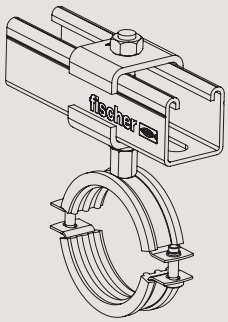


fischer channel washer HK 41 (≥ 10,5mm) or HK 31 (≥ 8,5mm)

# Load tables based on the advisory opinions.

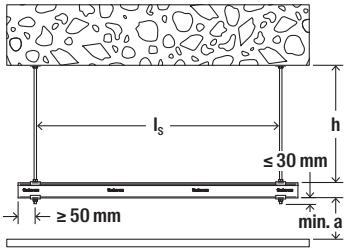

Picture 1

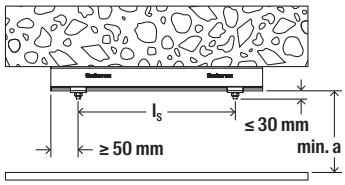

Picture 2

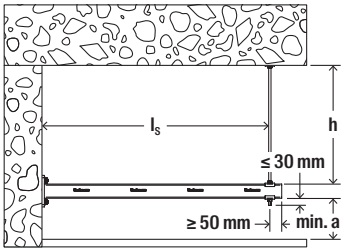

Picture 3

**FLS-Channel / ALK-Cantilever arm**

Load table based on the Adivisory Opinion No. GS 3.2/15-141-4
The following figures are valid for FLS channels and ALK cantilever arms, galvanised, hdg and stainless steel.

| FLS/ALK 37/1,2 (Picture 1-3) | | MLAR loads | | Max. Loads | | | | |
|---|---|---|---|---|---|---|---|---|
| Threaded rods ≥ 4.8 | | strain | F-resistance Min. | Max. strain | Fire resistance time [minute] | | | |
| Load case | ls [mm] | min a [mm] | 30 [kN] | min a [mm] | 30 [kN] | 60 [kN] | 90 [kN] | 120 [kN] |
| Point load | ≤ 400 [1] | ≤ 50 | 0,24 | 93 | 0,24 | 0,13 | 0,10 | 0,09 |
| | ≤ 400 [2] | ≤ 50 | 0,09 | 289 | 0,47 | 0,38 | 0,33 | 0,30 |
| | ≤ 400 [4] | ≤ 50 | 0,32 | 226 | 1,33 | 0,78 | 0,53 | 0,40 |
| Multiple load [3] | ≤ 400 [1] | ≤ 50 | 0,72 | 93 | 0,72 | 0,38 | 0,30 | 0,27 |
| | ≤ 400 [2] | ≤ 50 | 0,26 | 289 | 1,42 | 1,13 | 0,99 | 0,90 |
| | ≤ 400 [4] | ≤ 50 | 0,81 | 226 | 1,33 | 0,78 | 0,53 | 0,40 |
| Uniformly distributed load | ≤ 400 [1] | ≤ 50 | 0,72 | 93 | 0,72 | 0,38 | 0,30 | 0,27 |
| | ≤ 400 [2] | ≤ 50 | 0,35 | 308 | 1,37 | 1,19 | 1,06 | 0,95 |
| | ≤ 400 [4] | ≤ 50 | 0,81 | 226 | 1,33 | 0,78 | 0,53 | 0,40 |

1) Valid for a suspension height ha = 0 mm, s. picture 2
2) Valid for a suspension height ha = 500 mm, s. picture 1 (Expansion length of threaded rods in case of fire ~ 10 mm/m)
3) Given load values apply for multiple loads as summated point loads symmetrical allocated
4) This values are valid for ALK 37–450 with additional support by threaded rod, s picture 3 (ha = 500 mm)

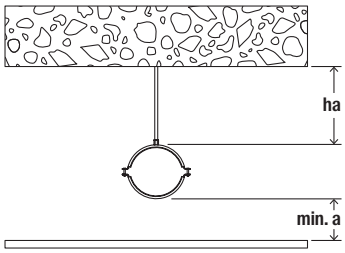


## Pipe clamp FRS

**Load table based on the Adivisory Opinion No. GS 3.2/14-175-2**
**The following figures are valid for all FRS pipe clamps, galvanised, hdg and stainless steel.**

| FRS M8/M10 | | MLAR | | Maximale Lasten | | | | |
|---|---|---|---|---|---|---|---|---|
| Threaded rods ≥ 4.8 | | strain | F-resist-ance | Max. strain | Fire resistance time [minute] | | | |
| Clamping range | ha | min a | 30 | min a | 30 | 60 | 90 | 120 |
| [mm] | [mm] | [mm] | [kN] | [mm] | [kN] | [kN] | [kN] | [kN] |
| 12–67 | ≤ 250 | ≤ 50 | 0,56 | 51 | 0,56 | 0,29 | 0,20 | 0,15 |
| | ≤ 500 | ≤ 50 | 0,56 | 54 | 0,56 | 0,29 | 0,20 | 0,15 |
| | ≤ 750 | ≤ 50 | 0,56 | 57 | 0,56 | 0,29 | 0,20 | 0,15 |
| | ≤ 1000 | ≤ 50 | 0,55 | 60 | 0,56 | 0,29 | 0,20 | 0,15 |
| 72–92 | ≤ 250 | ≤ 50 | 0,65 | 50 | 0,79 | 0,49 | 0,36 | 0,29 |
| | ≤ 500 | ≤ 50 | 0,62 | 53 | 0,79 | 0,49 | 0,36 | 0,29 |
| | ≤ 750 | ≤ 50 | 0,59 | 56 | 0,79 | 0,49 | 0,36 | 0,29 |
| | ≤ 1000 | ≤ 50 | 0,57 | 59 | 0,79 | 0,49 | 0,36 | 0,29 |
| 108–116 | ≤ 250 | ≤ 50 | 0,48 | 61 | 0,63 | 0,39 | 0,29 | 0,23 |
| | ≤ 500 | ≤ 50 | 0,43 | 64 | 0,63 | 0,39 | 0,29 | 0,23 |
| | ≤ 750 | ≤ 50 | 0,39 | 66 | 0,63 | 0,39 | 0,29 | 0,23 |
| | ≤ 1000 | ≤ 50 | 0,35 | 69 | 0,63 | 0,39 | 0,29 | 0,23 |
| 121–168 | ≤ 250 | ≤ 50 | 0,96 | 61 | 1,00 | 0,51 | 0,34 | 0,25 |
| | ≤ 500 | ≤ 50 | 0,89 | 63 | 1,00 | 0,51 | 0,34 | 0,25 |
| | ≤ 750 | ≤ 50 | 0,82 | 66 | 1,00 | 0,51 | 0,34 | 0,25 |
| | ≤ 1000 | ≤ 50 | 0,85 | 69 | 1,00 | 0,51 | 0,34 | 0,25 |

## Pipe clamp FRS-L Universal

**Load table based on the Adivisory Opinion No. GS 3.2/18-120-2**
**The following figures are valid for all FRS-L Universal pipe clamps, galvanised, hdg and stainless steel**

| FRS-L Universal M8/M10 | | MLAR -Loads | | Max. Loads | | | | |
|---|---|---|---|---|---|---|---|---|
| Threadeed rods ≥ 4.8 | | strain | F-resistance | Max. strain | Fire resistance time [minute] | | | |
| Clamping range | $h_a$ | min a | 30 | min a | 30 | 60 | 90 | 120 |
| [mm] | [mm] | [mm] | [kN] | [mm] | [kN] | [kN] | [kN] | [kN] |
| 8–37 | ≤ 250 | ≤ 50 | 0,27 | 54 | 0,27 | 0,14 | 0,09 | 0,07 |
| | ≤ 500 | ≤ 50 | 0,26 | 57 | 0,27 | 0,14 | 0,09 | 0,07 |
| | ≤ 750 | ≤ 50 | 0,24 | 60 | 0,27 | 0,14 | 0,09 | 0,07 |
| | ≤ 1000 | ≤ 50 | 0,22 | 62 | 0,27 | 0,14 | 0,09 | 0,07 |
| 38–66 | ≤ 250 | ≤ 50 | 0,17 | 72 | 0,29 | 0,14 | 0,09 | 0,06 |
| | ≤ 500 | ≤ 50 | 0,16 | 75 | 0,29 | 0,14 | 0,09 | 0,06 |
| | ≤ 750 | ≤ 50 | 0,15 | 78 | 0,29 | 0,14 | 0,09 | 0,06 |
| | ≤ 1000 | ≤ 50 | 0,13 | 80 | 0,29 | 0,14 | 0,09 | 0,06 |
| 67–119 | ≤ 250 | ≤ 50 | 0,53 | 75 | 0,53 | 0,35 | 0,27 | 0,22 |
| | ≤ 500 | ≤ 50 | 0,53 | 78 | 0,53 | 0,35 | 0,27 | 0,22 |
| | ≤ 750 | ≤ 50 | 0,53 | 81 | 0,53 | 0,35 | 0,27 | 0,22 |
| | ≤ 1000 | ≤ 50 | 0,53 | 83 | 0,53 | 0,35 | 0,27 | 0,22 |
| 120–172 | ≤ 250 | ≤ 50 | 0,40 | 65 | 0,42 | 0,31 | 0,25 | 0,22 |
| | ≤ 500 | ≤ 50 | 0,40 | 68 | 0,42 | 0,31 | 0,25 | 0,22 |
| | ≤ 750 | ≤ 50 | 0,38 | 72 | 0,42 | 0,31 | 0,25 | 0,22 |
| | ≤ 1000 | ≤ 50 | 0,36 | 75 | 0,42 | 0,31 | 0,25 | 0,22 |

# Load tables based on the advisory opinions.

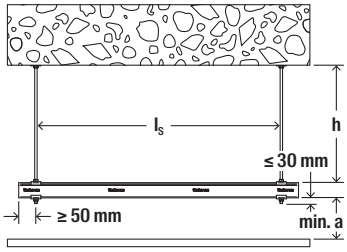

Picture 1

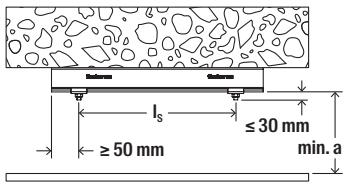

Picture 2

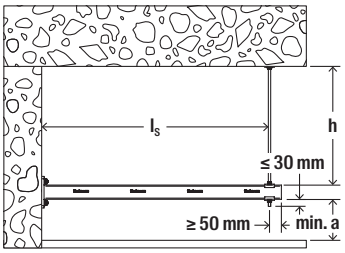

Picture 3

Note: Picture 1 - 3 are valid for FUS/FCA and FLS/ALK load tables

**FUS-Channel / FCA-Cantilever arm**

**Load table based on the Adivisory Opinion No. GS 3.2/14-175-4**
**The following figures are valid for FUS channels and FCA cantilever arms, galvanised, hdg and stainless steel.**

| FUS/FCA 41/2,5 (Picture 1–3) | | MLAR loads | | Max. Loads | | | | |
|---|---|---|---|---|---|---|---|---|
| Threaded rods ≥ 4.8 | | strain | F-resistance | Max. strain | Fire resistance time [minute] | | | |
| Load case | ls [mm] | min a [1] [mm] | 30 [kN] | min a [2] [mm] | 30 [kN] | 60 [kN] | 90 [kN] | 120 [kN] |
| Point load | ≤ 400 | ≤ 50 | 0,90 | 278 | 2,40 | 1,33 | 0,92 | 0,72 |
| | ≤ 700 | ≤ 50 | – | 320 | 1,61 | 1,04 | 0,80 | 0,67 |
| Multiple load [3] | ≤ 400 | ≤ 50 | 0,90 | 278 | 2,40 | 1,33 | 0,92 | 0,72 |
| | ≤ 700 | ≤ 50 | – | 320 | 1,61 | 1,04 | 0,80 | 0,67 |
| Uniformly distributed load | ≤ 400 | ≤ 50 | 1,50 | 258 | 3,00 | 2,10 | 1,41 | 1,06 |
| | ≤ 700 | ≤ 50 | 0,60 | 299 | 2,44 | 1,57 | 1,21 | 1,00 |
| | ≤ 1250 | ≤ 50 | – | 468 | 3,29 | 1,81 | 1,27 | 0,98 |
| **FUS/FCA 62/2,5 (Picture 1–3)** | | **MLAR loads** | | **Max. Loads** | | | | |
| **Threaded rods ≥ 4.8** | | **strain** | **F-resistance Min.** | **Max. strain** | **Fire resistance time [minute]** | | | |
| **Load case** | **ls [mm]** | **min a [1] [mm]** | **30 [kN]** | **min a [2] [mm]** | **30 [kN]** | **60 [kN]** | **90 [kN]** | **120 [kN]** |
| **Point load** | ≤ 400 | ≤ 50 | 1,76 | 25 | 1,76 | 1,06 | 0,78 | 0,62 |
| | ≤ 1000 | ≤ 50 | – | 460 | 2,27 | 1,31 | 0,93 | 0,72 |
| **Multiple load [3]** | ≤ 400 | ≤ 50 | 1,76 | 25 | 1,76 | 1,06 | 0,78 | 0,62 |
| | ≤ 960 [4] | ≤ 50 | 4,30 | 550 | 4,30 | 2,14 | 1,39 | 1,01 |
| | ≤ 1000 | ≤ 50 | 0,55 | 661 | 2,52 | 1,60 | 1,21 | 0,99 |
| **Uniformly distributed load** | ≤ 400 | ≤ 50 | 1,76 | 25 | 1,76 | 1,06 | 0,78 | 0,62 |
| | ≤ 960 [4] | ≤ 50 | 4,30 | 550 | 4,30 | 2,14 | 1,39 | 1,01 |
| | ≤ 1000 | ≤ 50 | 0,55 | 661 | 2,52 | 1,60 | 1,21 | 0,99 |
| | ≤ 1250 | ≤ 50 | 0,50 | 592 | 2,41 | 1,65 | 1,31 | 1,11 |
| **FUS 62/2,5 (Picture 4)** | | **MLAR loads** | | **Max. Loads** | | | | |
| **Vertical FUS 41/2,5** | | **strain** | **F-resistance** | **Max. strain** | **Fire resistance time [minute]** | | | |
| **Load case** | **ls [mm]** | **min a [1] [mm]** | **30 [kN]** | **min a [2] [mm]** | **30 [kN]** | **60 [kN]** | **90 [kN]** | **120 [kN]** |
| **Point load** | ≤ 1000 | ≤ 50 | 0,57 | 369 | 1,33 | 0,87 | 0,68 | 0,57 |
| **Multiple load [3]** | ≤ 1000 | ≤ 50 | 0,62 | 649 | 1,92 | 1,34 | 1,08 | 0,92 |
| | ≤ 1000 | ≤ 50 | 0,62 | 649 | 1,92 | 1,34 | 1,08 | 0,92 |

1) Valid for a suspension height ha [3] 500 mm
2) Based on suspension height ha = 250mm, Expansion length of threaded rods in case of fire ~ 10mm/m
3) Given load values apply for multiple loads as summated point loads symmetrical allocated
4) This values are valid for FCA 62/2,5 with additional support by threaded rod

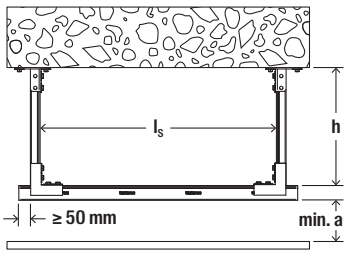

Picture 4

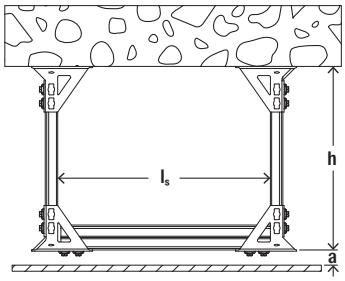

Picture 5

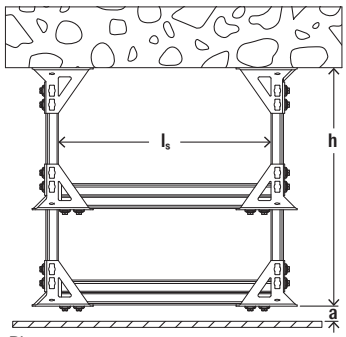

Picture 6

**PUWF**

**Load table PUWF - Frame construction with loads for fire protection application**

These loads apply with the same height and position/distribution of the mechanical load(s) and with the same bracing height h to smaller widths than the investigated clear width $l_S$,
with the same total height of the mechanical load and the same static system, to a higher number of uniformly distributed concentrated loads than tested,
with the same height of each individual mechanical load and the same static system, to less than the tested number of individual loads.

| Without intermediate level (picture 5) | | MLAR | | Maximum loads | | | |
|---|---|---|---|---|---|---|---|
| FUS 41-2,5 / FUS 41D-2,5/ PUWF/ PFCN 41 | Distance | Deformation | F-duration Min. | Fire resistance duration in minutes | | | |
| Load type | ls* | min a[1)] | 30 | 30 | 60 | 90 | 120 |
| | [mm] | [mm] | [kN] | [kN] | [kN] | [kN] | [kN] |
| Individual load | 1250 | ≤50 | 0,592 | 2,262 | 1,415 | 1,133 | 0,992 |

| With intermediate level (picture 6) | | MLAR | | Maximum loads | | | |
|---|---|---|---|---|---|---|---|
| FUS 41-2,5 / FUS 41D-2,5/ PUWF/ PFCN 41 | Distance | Deformation | F-duration Min. | Fire resistance duration in minutes | | | |
| Load type | ls* | min a[1)] | 30 | 30 | 60 | 90 | 120 |
| | [mm] | [mm] | [kN] | [kN] | [kN] | [kN] | [kN] |
| Individual load per level | 1250 | ≤50 | 0,478 | 1,311 | 0,805 | 0,637 | 0,553 |
| Individual load total | | | 0,956 | 2,621 | 1,611 | 1,274 | 1,106 |

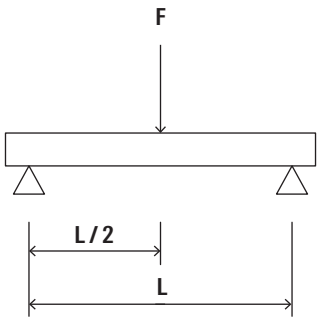


**Point load**
Spot load, e.g. a pipeclamp on the channel.

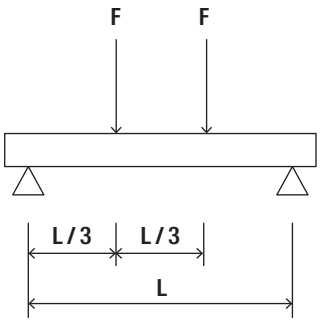


**Uniform load**
Uniform distribution of load on the channels, e.g. bend-proof **ventilation duct.**

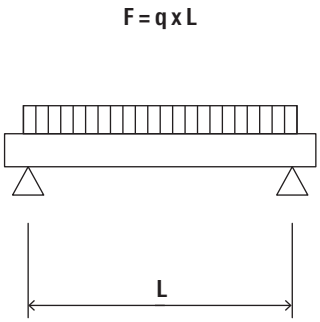


**Multiple load**
More than one load point on the channel, e.g. several pipe clamps.

# Fixing of sprinkler systems.



Sprinkler systems are designed and installed to different standards. For example, to the German VdS standard (VdS CEA 4001), to the American FM standard 1951 (Factory Mutual Insurance Company, FM Global), to the UL (Underwriters Laboratories, UL) based on the NFPA 13 standard (National Fire Protection Association, NFPA) or to the European standard EN 12845.

The European guideline CEA 4001 was introduced in 1995 by the insurance industry in collaboration with the manufacturers' association and in Germany in 2003 by "VdS Schadensverhütung GmbH" as VdS CEA 4001.

EN 12845 was created on the basis of the CEA 4001 of 1995 and the VdS CEA 4001 of 2003, so that the resulting standard is virtually the same. The EN 12845 is supplemented by the EN 12259 series of standards for the most important components but does not cover the further requirements of fixing products.

The American standards correspond with each other and with the European standards and guidelines regarding the fixing of pipework. The differences are in the detail and must be noted in the respective use.

## Certification symbol

## VdS CEA 4001 compliance symbol in concrete ceilings:



**Load values. fixing distances and connection sizes for pipe loops and pipe clamps for the most common guidelines**

| | FM1951 | | | | NFPA13 | | | | VdS CEA 4001 | | | |
|---|---|---|---|---|---|---|---|---|---|---|---|---|
| Pipe sizes | Test load | Max. distance | Min. rod size | | Test load calculated | Max. distance | Min. rod size | | Loading capacity | Max. | Min. Thread size | |
| DN | distance | Min. rod size | [metric] | [inch] | [kN] | [m] | [metric] | [inch] | [kN] | [m] | [metric] | [inch] |
| 15 | – | – | – | – | 1.4 | 3.60 | 9.5 | 3/8 | 2.0 | 4.00 | M8 | – |
| 20 | 1.512 | 3.6 | M10 | 3/8 | 1.5 | 3.60 | 9.5 | 3/8 | 2.0 | 4.00 | M8 | – |
| 25 | 1.824 | 3.6 | M10 | 3/8 | 1.7 | 3.66 | 9.5 | 3/8 | 2.0 | 4.00 | M8 | – |
| 32 | 1.913 | 3.6 | M10 | 3/8 | 1.9 | 3.66 | 9.5 | 3/8 | 2.0 | 4.00 | M8 | – |
| 40 | 2.313 | 4.6 | M10 | 3/8 | 2.4 | 4.57 | 9.5 | 3/8 | 2.0 | 4.00 | M8 | – |
| 50 | 2.825 | 4.6 | M10 | 3/8 | 2.9 | 4.57 | 9.5 | 3/8 | 3.5 | 4.00 | M10 | – |
| 65 | 4.181 | 4.6 | M10 | 3/8 | 3.8 | 4.57 | 9.5 | 3/8 | 3.5 | 6.00 | M10 | – |
| 80 | 4.715 | 4.6 | M10 | 3/8 | 4.8 | 4.57 | 9.5 | 3/8 | 3.5 | 6.00 | M10 | – |
| 90 | 5.583 | 4.6 | M10 | 3/8 | 5.7 | 4.57 | 9.5 | 3/8 | 3.5 | 6.00 | M10 | – |
| 100 | 6.561 | 4.6 | M10 | 3/8 | 6.7 | 4.57 | 9.5 | 3/8 | 5.0 | 6.00 | M10 | – |
| 125 | 8.896 | 4.6 | M12 | 1/2 | 9.0 | 4.57 | 12.7 | 1/2 | 5.0 | 6.00 | M12 | – |
| 150 | 11.632 | 4.6 | M12 | 1/2 | 11.8 | 4.57 | 12.7 | 1/2 | 8.5 | 6.00 | M12 | – |
| 200 | 16.903 | 4.6 | M12 | 1/2 | 18.2 | 4.57 | 12.7 | 1/2 | 8.5 | 6.00 | M16 | – |
| 250 | 26.044 | 4.6 | M16 | 5/8 | 26.7 | 4.60 | 15.9 | 5/8 | – | 6.00 | – | – |
| 300 | 35.141 | 4.6 | M16 | 5/8 | 36.0 | 4.60 | 15.9 | 5/8 | – | 6.00 | – | – |
| 350 | – | – | – | – | 42.9 | 4.60 | – | – | – | 6.00 | – | – |
| 400 | – | – | – | – | 55.7 | 4.60 | – | – | – | 6.00 | – | – |
| 450 | – | – | – | – | 70.1 | 4.60 | – | – | – | 6.00 | – | – |
| 500 | – | – | – | – | 84.4 | 4.60 | – | – | – | 6.00 | – | – |

# Mounting gas pipe.



**A specification for the usable anchors emerged from the DVGW-TRGI revision in 2008. This is regulated in TRGI 2008 in Chapter II under item 5.3 "Preparation of pipe installations". In the TRGI from 2008, plastic anchors are now explicitly allowed under certain conditions.**

The basis in the previous TRGI was the determination that gas pipes need to be mounted in the way that there are no free pipe cross-sections in the event of fire. In the new version, this was amended in that, in the event of fire, there may be no free pipe cross-sections up to a temperature of 650 °C. For pipe connections, this means that the axial restraint was also specified, and a brazed pipe joint, for example, is not considered as an axial restraint. Thus, standard commercially available plastic anchors with non-combustible pipe supports may be used for mounting metal inner pipes with an axial restraint of >650 °C. It should be noted that attachments are made to components with sufficient strength according to TRGI 2008. In addition, the mounting distances are governed in TRGI 2008, and are mandatory.

According to DVGW-TRGI 2008, plastic pipes for indoor pipes with an operating pressure up to 100 mbar are also allowed for the first time. For laying plastic inner pipes, in comparison to metal and non-combustible pipe installations, plastic pipes for gas installations are, without exception, subject to the system engagement of the manufacturer.

The fixing materials for open gas pipes can also be made of plastic if the static requirements are met. The requirement for using plastic pipes in gas installations is the installation of a type K gas flow monitor in conjunction with an additional thermally activated shut-off device (TAE), as the destruction of the openly laid plastic gas pipes in the event of fire must be assumed.

Integration of rules regarding building classes according to the German model building regulations (MBO) was also implemented in DVGW TRGI 2008. An alignment of the fire protection requirements, which are specified in the German standard pipe systems directive (MLAR 2005) for the installation of pipes in buildings was, therefore, only logical. The limit for increased demands on the gas installation according to TRGI 2008 are > 2 utilisation units (building class 3) for buildings and for a floor level upper edge of more than 7m of the top floor (building class 4).

If any of these conditions exists, or if any of them are exceeded, it is not possible to lay plastic pipes in escape routes. For metal pipes, the requirements of MLAR 2005 for laying in installation channels or below plaster and plaster base are applicable. For pipe mounting with anchors, MLAR 2005 stipulates that either officially approved anchors are used or, alternatively, that the provisions of DIN4102-T.4, section 8.5.7.5 (or DIN EN 1366-1, section 13.6) are observed. The same rule also applies to the installation of pipes through officially approved partitions in walls and ceilings, as the mechanical destruction of the partitions by pipes in the event of fire must be prevented.

When installing gas pipes, we therefore recommend the use of approved metal anchors, since, through the general official approval and the European technical approval, the certificate of suitability for the anchor is provided, also for in the event of fire. This gives the installer the necessary safety, also at the limits.

# Seismic and dynamic.



The seismic and dynamic requirements for non-structural installations, such as pipe installations, are often underestimated in comparison to those of structural installations. But even here, the rule is that the weakest link in the chain can lead to failure or to damage.

Since basically every building in which such requirements, or additional requirements included by property insurers, such as FM, are different, it is also not possible to specify standard details. In addition, the solutions to be developed should also include the links to the components.

For this reason, we recommend everyone to use the support of our technical staff, in order to develop a suitable and project-specific solution.

**www.fischer-international.com**

# Dimension and weights of pipes, ventilation ducts and ventilation pipes.

| Boiler pipe acc. to DIN 2448 / DIN EN 10220 | | | | | | |
|---|---|---|---|---|---|---|
| DN | Size | Pipe outer-ø [mm] | Pipe weight empty [kg/m] | Pipe weight waterfilled [kg/m] | Pipe weight waterfilled + isulated[1] [kg/m] | Support widths [m] |
| 8 | 1/4" | 13.5 | 0.5 | 0.6 | 1.4 | 2.00 |
| 10 | 3/8" | 17.2 | 0.7 | 0.8 | 1.9 | 2.25 |
| 15 | 1/2" | 21.3 | 1.0 | 1.2 | 2.2 | 2.75 |
| | | 25.0 | 1.1 | 1.5 | 2.8 | 2.75 |
| 20 | 3/4" | 26.9 | 1.4 | 1.8 | 3.1 | 3.00 |
| | | 30.0 | 1.8 | 2.3 | 4.0 | 3.00 |
| | | 31.8 | 1.9 | 2.4 | 4.2 | 3.00 |
| 25 | 1" | 33.7 | 2.0 | 2.6 | 4.7 | 3.50 |
| | | 38.0 | 2.3 | 3.1 | 5.2 | 3.50 |
| 32 | 11/4" | 42.4 | 2.6 | 3.7 | 5.7 | 3.75 |
| | | 44.5 | 2.7 | 3.9 | 6.9 | 3.75 |
| 40 | 11/2" | 48.3 | 3.0 | 4.4 | 7.4 | 4.25 |
| | | 51.0 | 3.1 | 4.8 | 7.7 | 4.40 |
| | | 57.0 | 3.9 | 6.0 | 10.0 | 4.60 |
| 50 | 2" | 60.3 | 4.1 | 6.5 | 10.5 | 4.75 |
| | | 63.5 | 4.4 | 7.0 | 11.0 | 4.75 |
| | | 70.0 | 4.8 | 8.1 | 13.4 | 4.75 |
| 65 | 2 1/2" | 76.1 | 5.3 | 9.2 | 14.8 | 5.50 |
| | | 82.5 | 6.3 | 10.9 | 19.2 | 5.75 |
| 80 | 3" | 88.9 | 6.8 | 12.2 | 20.4 | 6.00 |
| | | 101.6 | 8.8 | 15.8 | 27.0 | 6.00 |
| | | 108.0 | 9.3 | 17.3 | 29.1 | 6.00 |
| 100 | 4" | 114.3 | 9.9 | 18.9 | 30.6 | 6.00 |
| | | 127.0 | 12.2 | 23.3 | 36.1 | 6.00 |
| | | 133.0 | 12.8 | 25.1 | 37.8 | 6.00 |
| 125 | 5" | 139.7 | 13.5 | 27.1 | 40.3 | 6.00 |
| | | 152.4 | 16.5 | 32.7 | 47.1 | 6.00 |
| | | 159.0 | 17.3 | 34.9 | 49.2 | 6.00 |
| | | 165.1 | 17.9 | 37.1 | 52.0 | 6.00 |
| 150 | 6" | 168.3 | 18.3 | 38.2 | 53.0 | 6.00 |
| | | 177.8 | 21.4 | 43.6 | 58.1 | 6.00 |
| | | 193.7 | 25.2 | 51.5 | 68.0 | 6.00 |
| 200 | 8" | 219.1 | 31.2 | 65.0 | 83.3 | 6.00 |
| | | 244.5 | 37.2 | 79.5 | 98.6 | 6.00 |
| | | 267.0 | 40.8 | 91.6 | 112.7 | 6.00 |
| 250 | 10" | 273.0 | 41.6 | 94.9 | 117.7 | 6.00 |
| 300 | 12" | 323.9 | 55.6 | 131.0 | 156.6 | 6.00 |

1) Heat insulation: density 120 kg/m³ + sheet metal jacket: density 7865 kg/m³
2) Heat insulation: density 120 kg/m³
The corresponding pipe manufacturer´s data are to be considered.

| Copper pipe acc. to DIN EN 1057 | | | | | | |
|---|---|---|---|---|---|---|
| DN | Size | Pipe outer-ø [mm] | Pipe weight empty [kg/m] | Pipe weight waterfilled [kg/m] | Pipe weight waterfilled + isulated [1] [kg/m] | Support widths [m] |
| 10 | – | 17.2 | 0.6 | 0.8 | 1.8 | 1.3 |
| 15 | – | 21.3 | 1.0 | 1.2 | 2.3 | 1.5 |
| 20 | – | 26.9 | 1.3 | 1.7 | 2.9 | 2.0 |
| 25 | – | 33.7 | 1.6 | 2.3 | 4.3 | 2.3 |
| 32 | – | 42.4 | 2.0 | 3.2 | 5.2 | 2.8 |
| 40 | – | 48.3 | 2.3 | 3.9 | 6.8 | 3.0 |
| 50 | – | 60.3 | 2.9 | 5.4 | 9.5 | 3.5 |
| 65 | – | 76.1 | 3.7 | 7.8 | 13.5 | 4.3 |
| 80 | – | 88.9 | 4.4 | 10.0 | 18.2 | 4.8 |
| 100 | – | 114.3 | 7.3 | 16.6 | 28.3 | 5.0 |
| 125 | – | 139.7 | 8.9 | 23.1 | 36.4 | 5.0 |
| 150 | – | 168.3 | 13.2 | 34.1 | 48.9 | 5.0 |
| 200 | – | 219.1 | 17.3 | 52.8 | 71.2 | 5.0 |
| 250 | – | 273.0 | 21.6 | 80.1 | 100.9 | 5.0 |
| 300 | – | 323.9 | 25.7 | 108.1 | 132.0 | 5.0 |
| 400 | – | 406.4 | 32.3 | 162.0 | 190.6 | 5.0 |
| 500 | – | 508.0 | 40.4 | 243.1 | 279.8 | 5.0 |

| Threaded pipe acc. to DIN 2440 / DIN EN 10255 | | | | | | |
|---|---|---|---|---|---|---|
| DN | Size | Pipe outer-ø [mm] | Pipe weight empty [kg/m] | Pipe weight waterfilled [kg/m] | Pipe weight waterfilled + isulated [1] [kg/m] | Support widths [m] |
| 8 | 1/4" | 13.5 | 0.7 | 0.7 | 1.6 | 2.00 |
| 10 | 3/8" | 17.2 | 0.9 | 1.0 | 2.0 | 2.25 |
| 15 | 1/2" | 21.3 | 1.2 | 1.4 | 2.5 | 2.75 |
| 20 | 3/4" | 26.9 | 1.6 | 2.0 | 3.2 | 3.00 |
| 25 | 1" | 33.7 | 2.4 | 3.0 | 5.1 | 3.50 |
| 32 | 1 1/4" | 42.4 | 3.1 | 4.2 | 6.2 | 3.75 |
| 40 | 1 1/2" | 48.3 | 3.6 | 5.0 | 8.0 | 4.25 |
| 50 | 2" | 60.3 | 5.1 | 7.3 | 11.4 | 4.75 |
| 65 | 2 1/2" | 76.1 | 6.5 | 10.2 | 15.9 | 5.50 |
| 80 | 3" | 88.9 | 8.5 | 13.6 | 21.8 | 6.00 |
| 100 | 4" | 114.3 | 12.1 | 20.8 | 32.5 | 6.00 |
| 125 | 5" | 139.7 | 16.2 | 29.5 | 42.7 | 6.00 |
| 150 | 6" | 165.1 | 19.2 | 38.2 | 53.1 | 6.00 |

1) Heat insulation: density 120 kg/m3 + sheet metal jacket: density 7865 kg/m3
The corresponding pipe manufacturer´s data are to be considered.

| Copper pipe acc. to DIN EN 1057 | | | | | | |
|---|---|---|---|---|---|---|
| DN | Size | Pipe outer-ø [mm] | Pipe weight empty [kg/m] | Pipe weight waterfilled [kg/m] | Pipe weight waterfilled + isulated [1] [kg/m] | Support widths [m] |
| 8 | 10x1 | 10 | 0.3 | 0.3 | 0.4 | 1.00 |
| 10 | 12x1 | 12 | 0.3 | 0.4 | 0.5 | 1.25 |
| 12 | 15x1 | 15 | 0.4 | 0.5 | 0.8 | 1.25 |
| 15 | 18x1 | 18 | 0.5 | 0.7 | 1.0 | 1.50 |
| 20 | 22x1 | 22 | 0.6 | 0.9 | 1.3 | 2.00 |
| 25 | 28x1.5 | 28 | 1.1 | 1.6 | 2.4 | 2.25 |
| 32 | 35x1.5 | 35 | 1.4 | 2.2 | 3.1 | 2.75 |
| 40 | 42x1.5 | 42 | 1.7 | 2.9 | 4.4 | 3.00 |
| 50 | 54x2 | 54 | 2.9 | 4.9 | 7.3 | 3.50 |
| 50 | 64x2 | 64 | 3.5 | 6.3 | 9.8 | 4.00 |
| 65 | 76.1x2 | 76.1 | 4.1 | 8.2 | 14.0 | 4.25 |
| 80 | 88.9x2 | 88.9 | 4.9 | 10.5 | 16.4 | 4.75 |
| 100 | 108x2.5 | 108 | 7.4 | 15.75 | 27.5 | 5.00 |

| Stainless steel pressure system | | | | | | |
|---|---|---|---|---|---|---|
| DN | Size | Pipe outer-ø [mm] | Pipe weight empty [kg/m] | Pipe weight waterfilled [kg/m] | Pipe weight waterfilled + isulated [1] [kg/m] | Support widths [m] |
| 12 | 15x1 | 15 | 0.3 | 0.5 | 0.8 | 1.50 |
| 15 | 18x1 | 18 | 0.4 | 0.6 | 1.0 | 1.50 |
| 20 | 22x1.2 | 22 | 0.6 | 0.9 | 1.3 | 2.50 |
| 25 | 28x1.2 | 28 | 0.8 | 1.3 | 2.4 | 2.50 |
| 32 | 35x1.5 | 35 | 1.2 | 2.0 | 3.1 | 3.50 |
| 40 | 42x1.5 | 42 | 1.5 | 2.7 | 4.4 | 3.50 |
| 50 | 54x1.5 | 54 | 2.0 | 4.0 | 7.3 | 3.50 |
| 65 | 76.1x2 | 76.1 | 3.6 | 7.6 | 14.0 | 5.00 |
| 80 | 88.9x2 | 88.9 | 4.2 | 9.8 | 16.4 | 5.00 |
| 100 | 108x2 | 108 | 5.1 | 13.5 | 27.5 | 5.00 |

| Metal composite pipe | | | | | | |
|---|---|---|---|---|---|---|
| DN | Size | Pipe outer-ø [mm] | Pipe weight empty [kg/m] | Pipe weight waterfilled [kg/m] | Pipe weight waterfilled + isulated [1] [kg/m] | Support widths [m] |
| 10 | 14x2 | 14 | 0.1 | 0.2 | 0.4 | 1.0 |
| 12 | 16x2.25 | 16 | 0.1 | 0.2 | 0.5 | 1.0 |
| 15 | 20x2.5 | 20 | 0.2 | 0.4 | 0.7 | 1.0 |
| 20 | 26x3 | 26 | 0.3 | 0.6 | 0.9 | 1.5 |
| 25 | 32x3 | 32 | 0.4 | 0.9 | 1.2 | 2.0 |
| 32 | 40x3.5 | 40 | 0.6 | 1.5 | 2.1 | 2.0 |
| 40 | 50x4 | 50 | 0.9 | 2.3 | 3.2 | 2.5 |
| 50 | 63x4.5 | 63 | 1.3 | 3.6 | 5.2 | 2.5 |

1) Heat insulation: density 120 kg/m$^3$ + sheet metal jacket: density 7865 kg/m$^3$
The corresponding pipe manufacturer's data are to be considered.

| Drain pipe. Cast iron. SML. DIN 19522 | | | | |
|---|---|---|---|---|
| DN | Pipe outer-ø [mm] | Pipe weight empty [kg/m] | Pipe weight water filled [kg/m] | Support widths [m] |
| 40 | 48 | 3.1 | 4.5 | 1) |
| 50 | 58 | 4.3 | 6.4 | 1) |
| 70 | 78 | 5.9 | 9.9 | 1) |
| 80 | 83 | 6.1 | 10.6 | 1) |
| 100 | 110 | 8.4 | 17.7 | 1) |
| 125 | 135 | 11.8 | 24.5 | 1) |
| 150 | 160 | 14.1 | 32.3 | 1) |
| 200 | 210 | 23.1 | 54.6 | 1) |
| 250 | 274 | 33.3 | 87.7 | 1) |
| 300 | 326 | 43.2 | 120.8 | 1) |
| 400 | 429 | 60.0 | 193.3 | 1) |
| 500 | 532 | 82.6 | 290.1 | 1) |

| Drain pipe. PVC-U. DIN 8062 | | | | | |
|---|---|---|---|---|---|
| DN | Pipe outer-ø [mm] | Pipe weight empty [kg/m] | Pipe weight water filled [kg/m] | Support widths 20° [m] | 40° [m] |
| 40 | 50 | 0.8 | 1.3 | 0.8 | 0.6 |
| 50 | 63 | 1.3 | 2.0 | 1.1 | 0.7 |
| 65 | 75 | 1.8 | 3.9 | 1.3 | 0.8 |
| 80 | 90 | 2.6 | 3.9 | 1.3 | 0.8 |
| 100 | 110 | 3.9 | 8.0 | 1.6 | 1.0 |
| 125 | 125 | 5.0 | 12.4 | 1.8 | 1.1 |
| 150 | 160 | 8.2 | 18.0 | 2.2 | 1.2 |

| LORO-X steel drain pipe | | | | |
|---|---|---|---|---|
| DN | Pipe outer-ø [mm] | Pipe weight empty [kg/m] | Pipe weight water filled [kg/m] | Support widths [m] |
| 40 | 42 | 1.5 | 2.7 | 1) |
| 50 | 53 | 2.2 | 4.2 | 1) |
| 70 | 73 | 3.3 | 7.1 | 1) |
| 80 | 89 | 4.1 | 9.9 | 1) |
| 100 | 102 | 5.8 | 13.3 | 1) |
| 125 | 133 | 9.6 | 22.5 | 1) |
| 150 | 159 | 11.5 | 30.1 | 1) |
| 200 | 219 | 21.5 | 57.2 | 1) |
| 250 | 273 | 22.5 | 78.5 | 1) |
| 300 | 324 | 25.0 | 104.4 | 1) |

Note: The values for the max. support widths are based on the permissible deflection under load of the pipes and the corresponding recommendations from the pipe manufacturer. The permissible loads of the pipe fasteners and mountings are not taken into consideration.

1) approx. 1,50 m – 2,00 m. According to the manufacturer's data, each pipe length should be supported in at least two places. The corresponding data from the pipe manufacturer are to be taken into consideration.

| Drain pipe. GA. DIN 19500 | | | | | |
|---|---|---|---|---|---|
| DN | Pipe outer-ø [mm] | Wall thickness [mm] | Pipe weight empty [kg/m] | Pipe weight water filled [kg/m] | Support widths [m] |
| 50 | 60 | 3.5 | 5.19 | 7.39 | 1) |
| 70 | 80 | 3.5 | 7.02 | 11.21 | 1) |
| 100 | 112 | 4.0 | 11.33 | 19.83 | 1) |
| 125 | 137 | 4.0 | 13.96 | 27.03 | 1) |
| 150 | 162 | 5.0 | 20.59 | 38.74 | 1) |
| 200 | 212 | 6.0 | 32.42 | 63.84 | 1) |

| Drain pipe. PE. DIN 19535 | | | | |
|---|---|---|---|---|
| DN | Pipe outer-ø [mm] | Pipe weight empty [kg/m] | Pipe weight water filled [kg/m] | Support widths [m] |
| 25 | 32 | 0.3 | 0.8 | 0.5 |
| 32 | 40 | 0.3 | 1.3 | 0.5 |
| 40 | 50 | 0.4 | 2.0 | 0.8 |
| 50 | 56 | 0.5 | 2.5 | 0.8 |
| 57 | 63 | 0.6 | 3.1 | 0.8 |
| 70 | 75 | 0.7 | 4.4 | 0.8 |
| 80 | 90 | 1.0 | 6.4 | 0.9 |
| 100 | 110 | 1.4 | 9.5 | 1.1 |
| 125 | 125 | 1.8 | 12.3 | 1.3 |
| 125 | 140 | 2.3 | 15.4 | 1.4 |
| 150 | 160 | 3.0 | 20.1 | 1.6 |
| 200 | 200 | 3.8 | 31.5 | 2.0 |
| 250 | 250 | 6.0 | 49.2 | 2.0 |

| Spiral lock seam pipe. round. acc. to DIN EN12237 | | | | | | | | | | | | | | | | | | | | | | | | | | | | | | |
|---|---|---|---|---|---|---|---|---|---|---|---|---|---|---|---|---|---|---|---|---|---|---|---|---|---|---|---|---|---|---|
| DN | 71 | 80 | 90 | 100 | 112 | 125 | 140 | 150 | 160 | 180 | 200 | 224 | 250 | 280 | 300 | 315 | 355 | 400 | 450 | 500 | 560 | 600 | 630 | 710 | 800 | 900 | 1000 | 1120 | 1250 |
| Pipe outer-ø [mm] | 75 | 84 | 94 | 105 | 117 | 130 | 145 | 155 | 165 | 185 | 205 | 229 | 255 | 285 | 307 | 322 | 362 | 407 | 457 | 507 | 567 | 609 | 639 | 719 | 810 | 1012 | 1012 | 1132 | 1262 |
| Sheet thickness [mm] | 0.4 | 0.4 | 0.4 | 0.6 | 0.6 | 0.6 | 0.6 | 0.6 | 0.6 | 0.6 | 0.6 | 0.6 | 0.6 | 0.6 | 0.8 | 0.8 | 0.8 | 0.8 | 0.8 | 0.8 | 0.8 | 1.0 | 1.0 | 1.0 | 1.0 | 1.0 | 1.2 | 1.2 | 1.2 |
| Pipe weight empty [kg/m] | 0.8 | 0.9 | 1.0 | 1.7 | 1.9 | 2.1 | 2.4 | 2.6 | 2.7 | 3.1 | 3.4 | 3.8 | 4.2 | 4.7 | 5.2 | 7.1 | 8.0 | 9.0 | 10.2 | 11.3 | 12.6 | 13.5 | 17.7 | 20.0 | 22.5 | 25.4 | 34.9 | 39.1 | 43.7 |

**Weights of galvanised air ducts in kg/m with insulation (80 kg/m³. 5 cm thickness)**

| Sheet metal 0.75 | | | Sheet metal 0.88 | | | | | | Sheet metal 1.0 | | | | | | Sheet metal 1.13 | | | | | | Sheet metal 1.25 | | | | ↔B ↕H |
|---|---|---|---|---|---|---|---|---|---|---|---|---|---|---|---|---|---|---|---|---|---|---|---|---|---|
| 200 | 224 | 250 | 280 | 315 | 355 | 400 | 450 | 500 | 560 | 630 | 710 | 800 | 900 | 1000 | 1120 | 1250 | 1400 | 1600 | 1800 | 2000 | 2240 | 2500 | 2800 | 3150 | |
| 9.1 | 9.6 | 10.2 | 12.1 | 13.0 | 14.0 | 15.2 | 16.4 | 17.7 | 21.0 | 22.9 | 25.1 | 27.6 | 30.4 | 33.2 | 39.8 | 43.8 | 48.3 | 54.3 | 60.4 | 66.4 | 79.4 | 87.8 | 97.6 | 109.0 | 200 |
| – | 10.2 | 10.8 | 12.7 | 13.6 | 14.6 | 15.8 | 17.0 | 18.3 | 21.7 | 23.6 | 25.8 | 28.3 | 31.1 | 33.8 | 40.6 | 44.5 | 49.0 | 55.0 | 61.1 | 67.1 | 80.2 | 88.6 | 98.4 | 109.8 | 224 |
| – | – | 11.4 | 13.4 | 14.3 | 15.3 | 16.4 | 17.7 | 19.0 | 22.4 | 24.3 | 26.5 | 29.0 | 31.8 | 34.5 | 41.3 | 45.3 | 49.8 | 55.8 | 61.9 | 67.9 | 81.0 | 89.5 | 99.2 | 110.6 | 250 |
| – | – | – | 14.2 | 15.0 | 16.0 | 17.2 | 18.4 | 19.7 | 23.2 | 25.1 | 27.3 | 29.8 | 32.6 | 35.4 | 42.2 | 46.2 | 50.7 | 56.7 | 62.8 | 68.8 | 82.0 | 90.4 | 100.2 | 111.6 | 280 |
| – | – | – | – | 15.9 | 16.9 | 18.1 | 19.3 | 20.6 | 24.2 | 26.1 | 28.3 | 30.8 | 33.6 | 36.3 | 43.3 | 47.2 | 51.8 | 57.8 | 63.8 | 69.9 | 83.1 | 91.6 | 101.3 | 112.7 | 315 |
| – | – | – | – | – | 17.9 | 19.1 | 20.3 | 21.6 | 25.3 | 27.2 | 29.4 | 31.9 | 34.7 | 37.4 | 44.5 | 48.4 | 53.0 | 59.0 | 65.0 | 71.1 | 84.4 | 92.9 | 102.6 | 114.0 | 355 |
| – | – | – | – | – | – | 20.2 | 21.5 | 22.7 | 26.5 | 28.5 | 30.7 | 33.2 | 35.9 | 38.7 | 45.9 | 49.8 | 54.3 | 60.4 | 66.4 | 72.4 | 85.9 | 94.3 | 104.1 | 115.5 | 400 |
| – | – | – | – | – | – | – | 22.7 | 24.0 | 27.9 | 29.8 | 32.0 | 34.5 | 37.3 | 40.1 | 47.4 | 51.3 | 55.8 | 61.9 | 67.9 | 73.9 | 87.5 | 96.0 | 105.7 | 117.1 | 450 |
| – | – | – | – | – | – | – | – | 25.3 | 29.3 | 31.2 | 33.4 | 35.9 | 38.7 | 41.4 | 48.9 | 52.8 | 57.3 | 63.4 | 69.4 | 75.4 | 89.1 | 97.6 | 107.4 | 118.7 | 500 |
| – | – | – | – | – | – | – | – | – | 30.9 | 32.9 | 35.1 | 37.6 | 40.3 | 43.1 | 50.7 | 54.6 | 59.1 | 65.2 | 71.2 | 77.3 | 91.1 | 99.5 | 109.3 | 120.7 | 560 |
| – | – | – | – | – | – | – | – | – | – | 34.8 | 37.0 | 39.5 | 42.3 | 45.0 | 52.8 | 56.7 | 61.3 | 67.3 | 73.3 | 79.4 | 93.4 | 101.8 | 111.6 | 123.0 | 630 |
| – | – | – | – | – | – | – | – | – | – | – | 39.2 | 41.7 | 44.5 | 47.2 | 55.2 | 59.1 | 63.7 | 69.7 | 75.7 | 81.8 | 96.0 | 104.4 | 114.2 | 125.6 | 710 |
| – | – | – | – | – | – | – | – | – | – | – | – | 44.2 | 47.0 | 49.7 | 57.9 | 61.9 | 66.4 | 72.4 | 78.5 | 84.5 | 98.9 | 107.4 | 117.1 | 128.5 | 800 |
| – | – | – | – | – | – | – | – | – | – | – | – | – | 49.7 | 52.5 | 61.0 | 64.9 | 69.4 | 75.4 | 81.5 | 87.5 | 102.1 | 110.6 | 120.4 | 131.8 | 900 |
| – | – | – | – | – | – | – | – | – | – | – | – | – | – | 55.3 | 64.0 | 67.9 | 72.4 | 78.5 | 84.5 | 90.5 | 105.4 | 113.9 | 123.6 | 135.0 | 1000 |
| – | – | – | – | – | – | – | – | – | – | – | – | – | – | – | 67.6 | 71.5 | 76.0 | 82.1 | 88.1 | 94.1 | 109.3 | 117.8 | 127.5 | 138.9 | 1120 |
| – | – | – | – | – | – | – | – | – | – | – | – | – | – | – | – | 75.4 | 80.8 | 86.0 | 92.0 | 98.1 | 113.5 | 122.0 | 131.8 | 143.1 | 1250 |
| – | – | – | – | – | – | – | – | – | – | – | – | – | – | – | – | – | 84.5 | 90.5 | 96.6 | 102.6 | 118.4 | 126.9 | 136.6 | 148.0 | 1400 |
| – | – | – | – | – | – | – | – | – | – | – | – | – | – | – | – | – | – | 96.6 | 102.6 | 108.6 | 124.9 | 133.4 | 143.1 | 154.5 | 1600 |
| – | – | – | – | – | – | – | – | – | – | – | – | – | – | – | – | – | – | – | 108.6 | 114.7 | 131.4 | 139.9 | 149.6 | 161.0 | 1800 |
| – | – | – | – | – | – | – | – | – | – | – | – | – | – | – | – | – | – | – | – | 120.7 | 137.9 | 146.4 | 156.2 | 167.5 | 2000 |
| – | – | – | – | – | – | – | – | – | – | – | – | – | – | – | – | – | – | – | – | – | 145.7 | 154.2 | 164.0 | 175.3 | 2240 |
| – | – | – | – | – | – | – | – | – | – | – | – | – | – | – | – | – | – | – | – | – | – | 162.7 | 172.4 | 183.8 | 2500 |
| – | – | – | – | – | – | – | – | – | – | – | – | – | – | – | – | – | – | – | – | – | – | – | 182.2 | 193.6 | 2800 |
| – | – | – | – | – | – | – | – | – | – | – | – | – | – | – | – | – | – | – | – | – | – | – | – | 204.9 | 3150 |

17

**Weights of galvanised ventilation ducts in kg/m without insulation**

| Sheet metal 0.75 | | | Sheet metal 0.88 | | | | | | Sheet metal 1.0 | | | | | | Sheet metal 1.13 | | | | | | Sheet metal 1.25 | | | | ↔B ↕H |
|---|---|---|---|---|---|---|---|---|---|---|---|---|---|---|---|---|---|---|---|---|---|---|---|---|---|
| 200 | 224 | 250 | 280 | 315 | 355 | 400 | 450 | 500 | 560 | 630 | 710 | 800 | 900 | 1000 | 1120 | 1250 | 1400 | 1600 | 1800 | 2000 | 2240 | 2500 | 2800 | 3150 | |
| 5.9 | 6.2 | 6.6 | 8.3 | 8.9 | 9.6 | 10.4 | 11.2 | 12.1 | 14.9 | 16.3 | 17.9 | 19.6 | 21.6 | 23.6 | 29.3 | 32.2 | 35.5 | 39.9 | 44.4 | 48.8 | 59.9 | 66.2 | 73.6 | 82.8 | 200 |
| – | 6.6 | 7.0 | 8.7 | 9.3 | 10.0 | 10.8 | 11.6 | 12.5 | 15.4 | 16.8 | 18.3 | 20.1 | 22.1 | 24.0 | 29.8 | 32.7 | 36.0 | 40.4 | 44.9 | 49.3 | 60.4 | 66.8 | 74.2 | 82.2 | 224 |
| – | – | 7.4 | 9.2 | 9.8 | 10.4 | 11.2 | 12.1 | 13.0 | 15.9 | 17.3 | 18.8 | 20.6 | 22.6 | 24.5 | 30.4 | 33.3 | 36.6 | 41.0 | 45.5 | 49.9 | 61.1 | 67.5 | 74.8 | 83.4 | 250 |
| – | – | – | 9.7 | 10.3 | 11.0 | 11.7 | 12.6 | 13.5 | 16.5 | 17.9 | 19.4 | 21.2 | 23.2 | 25.1 | 31.0 | 33.9 | 37.3 | 41.7 | 46.1 | 50.6 | 61.8 | 68.2 | 75.6 | 84.1 | 280 |
| – | – | – | – | 10.9 | 11.6 | 12.3 | 13.2 | 14.1 | 17.2 | 18.5 | 20.1 | 21.9 | 23.8 | 25.8 | 31.8 | 34.7 | 38.0 | 42.5 | 46.9 | 51.3 | 62.7 | 69.1 | 76.4 | 85.0 | 315 |
| – | – | – | – | – | 12.3 | 13.0 | 13.9 | 14.8 | 18.0 | 19.3 | 20.9 | 22.7 | 24.6 | 26.6 | 32.7 | 35.6 | 38.9 | 43.4 | 47.8 | 52.2 | 63.7 | 70.0 | 77.4 | 86.0 | 355 |
| – | – | – | – | – | – | 13.8 | 14.7 | 15.5 | 18.8 | 20.2 | 21.8 | 23.6 | 25.5 | 27.5 | 33.7 | 36.6 | 39.9 | 44.4 | 48.8 | 53.2 | 64.8 | 71.1 | 78.5 | 87.1 | 400 |
| – | – | – | – | – | – | – | 15.5 | 16.4 | 19.8 | 21.2 | 22.8 | 24.5 | 26.5 | 28.5 | 34.8 | 37.7 | 41.0 | 45.5 | 49.9 | 54.3 | 66.0 | 72.4 | 79.7 | 88.3 | 450 |
| – | – | – | – | – | – | – | – | 17.3 | 20.8 | 22.2 | 23.7 | 25.5 | 27.5 | 29.4 | 35.9 | 38.8 | 42.1 | 46.6 | 51.0 | 55.4 | 67.2 | 73.6 | 81.0 | 89.5 | 500 |
| – | – | – | – | – | – | – | – | – | 22.0 | 23.4 | 24.9 | 26.7 | 28.7 | 30.6 | 37.3 | 40.1 | 43.5 | 47.9 | 52.3 | 56.8 | 68.7 | 75.1 | 82.4 | 91.0 | 560 |
| – | – | – | – | – | – | – | – | – | – | 24.7 | 26.3 | 28.1 | 30.0 | 32.0 | 38.8 | 41.7 | 45.0 | 49.5 | 53.9 | 58.3 | 70.4 | 76.8 | 84.1 | 92.7 | 630 |
| – | – | – | – | – | – | – | – | – | – | – | 27.9 | 29.6 | 31.6 | 33.6 | 40.6 | 43.5 | 46.8 | 51.2 | 55.7 | 60.1 | 72.4 | 78.7 | 86.1 | 94.7 | 710 |
| – | – | – | – | – | – | – | – | – | – | – | – | 31.4 | 33.4 | 35.3 | 42.6 | 45.5 | 48.8 | 53.2 | 57.7 | 62.1 | 74.6 | 81.0 | 88.3 | 96.9 | 800 |
| – | – | – | – | – | – | – | – | – | – | – | – | – | 35.3 | 37.3 | 44.8 | 47.7 | 51.0 | 55.4 | 59.9 | 64.3 | 77.0 | 83.4 | 90.8 | 99.4 | 900 |
| – | – | – | – | – | – | – | – | – | – | – | – | – | – | 39.3 | 47.0 | 49.9 | 53.2 | 57.7 | 62.1 | 66.5 | 79.5 | 85.9 | 93.2 | 101.8 | 1000 |
| – | – | – | – | – | – | – | – | – | – | – | – | – | – | – | 49.7 | 52.6 | 55.9 | 60.3 | 64.8 | 69.2 | 82.4 | 88.8 | 96.2 | 104.7 | 1120 |
| – | – | – | – | – | – | – | – | – | – | – | – | – | – | – | – | 55.4 | 58.8 | 63.2 | 67.6 | 72.1 | 85.6 | 92.0 | 99.4 | 107.9 | 1250 |
| – | – | – | – | – | – | – | – | – | – | – | – | – | – | – | – | – | 62.1 | 66.5 | 71.0 | 75.4 | 89.3 | 95.7 | 103.0 | 111.6 | 1400 |
| – | – | – | – | – | – | – | – | – | – | – | – | – | – | – | – | – | – | 71.0 | 75.4 | 79.8 | 94.2 | 100.6 | 107.9 | 116.5 | 1600 |
| – | – | – | – | – | – | – | – | – | – | – | – | – | – | – | – | – | – | – | 79.8 | 84.3 | 99.1 | 105.5 | 112.8 | 121.4 | 1800 |
| – | – | – | – | – | – | – | – | – | – | – | – | – | – | – | – | – | – | – | – | 88.7 | 104.0 | 110.4 | 117.8 | 126.3 | 2000 |
| – | – | – | – | – | – | – | – | – | – | – | – | – | – | – | – | – | – | – | – | – | 109.9 | 116.3 | 123.6 | 132.2 | 2240 |
| – | – | – | – | – | – | – | – | – | – | – | – | – | – | – | – | – | – | – | – | – | – | 122.7 | 130.0 | 138.6 | 2500 |
| – | – | – | – | – | – | – | – | – | – | – | – | – | – | – | – | – | – | – | – | – | – | – | 137.4 | 146.0 | 2800 |
| – | – | – | – | – | – | – | – | – | – | – | – | – | – | – | – | – | – | – | – | – | – | – | – | 154.5 | 3150 |

The weights in kg/m are reference values. The weights can deviate, depending on the sheet metal thickness and the type of flange used. The flange weight is included flat -rate. The loads based on a mineral wool weight of 80 kg/m2 and a thickness of 5 cm.

# Important dimensions, variables and units.

| Comparison of material standards | | | |
|---|---|---|---|
| DIN EN ISO | | | DIN EN ISO |
| **Description** | **Material-No.** | | **ASTM** |
| **S250GD+Z** | 1.0242 | EN10027-2 | A653 |
| **DD11** | 1.0332 | DIN EN 10111 | A621CQ |
| **DC01** | 1.0330 | DIN EN 10130 | A366 |
| **St22** | 1.0320 | DIN 1614-1 | n/a |
| **DX51D+Z275NA-C** | 1.0226+Z | DIN EN 10327 | A653/CQ |
| **S235JR** | 1.0037 | DIN EN 10025 | A283 |
| **S355MC** | 1.0976 | DIN EN 10149 | n/a |
| **4.6; 4.8** | DIN EN ISO 898-1 | | F568M |

| Variables and units | | | | | |
|---|---|---|---|---|---|
| **Size** | **Formula symbol** [mm] | **Unit SI** [mm] | **others** [kg/m] | **related** [kg/m] | **Note** [m] |
| **Length** | l | m | – | 1 m = 10 dm = 100 cm = 1.000 mm<br>1 mm = 1.000 µm<br>1 km = 1.000 m | 1 inch = 1 Zoll = 25.4 mm |
| **Area** | A, S | $m^2$ | a, ha | 1 $m^2$ = 10.000 $cm^2$ = 1.000.000 $m^2$<br>1 a = 100 $m^2$<br>1 ha = 100 a = 10.000 $m^2$ | – |
| **Volume** | V | $m^3$ | l | 1 $m^3$ = 1.000 $dm^3$ = 1.000.000 $cm^3$<br>1 l = 1 $dm^3$ = 0.001 $m^3$<br>1 ml = 1 $cm^3$ | – |
| **Time** | t | s | min, h, d | 1 min = 60 s<br>1 h = 60 min = 3.600 s<br>1 d = 24 h | – |
| **Frequency** | f | Hz | – | 1 Hz = 1/s | – |
| **Speed** | v | m/s | m/s, km/h | 1 m/s = 3.6 km/h | – |
| **Acceleration** | a, g | $m/s^2$ | – | g = 9.81 $m/s^2$ | Formula character g only for acceleration due to gravity |
| **Weight** | m | kg | g, t | 1 kg = 1.000 g<br>1 t = 1.000 kg | – |
| **Density** | ρ | $kg/m^3$ | – | 1.000 $kg/m^3$ = 1 $t/m^3$ = 1 $kg/dm^3$ | – |
| **Moment of inertia, 2nd degree** | J | kg · $m^2$ | – | – | Formerly: Mass moment of inertia |
| **Force** | F | N | – | 1 N = 1 kg · $m/s^2$ | Formerly: kp (kilopond)<br>1 kp = 9,80665 $kgm/s^2$ = 9,81 N |
| **Torque** | M | N · m | – | – | – |
| **Bending moment** | Mb | N · m | – | – | – |
| **Torsion moment** | T | N · m | – | – | – |
| **Mechanical tension** | σ, τ | $N/m^2$ | – | – | – |
| **Area-wise moment, 2nd degree** | I | $m^4$ | – | – | Formerly: Area moment of inertia |
| **Energy, work** | E, W | J | – | 1 J = 1 N · m = 1 W · s | Formerly: cal (calorie)<br>1 cal = 4,1868 Ws = 4,19 J |
| **Power** | P | W | – | 1 W = 1 J/s = 1 N · m/s | Formerly: hp (horsepower)<br>1 PS = 75 kpm/s = 75 · 9,81 N/ms = 0,736 kW |
| **Thermodynamic temperature** | T | K | – | 0 °C = 273 K<br>-273 °C = 0 K | – |
| **Heat quantity** | Q | J | (Wh) | 1 J = 1 W · s = 1 N · m | – |
| **Specific heat value** | H | J/kg | – | – | – |
| **Substance quantity** | n | mol | – | 1 corresponds to approx 6 · $10^{23}$ | – |
| **Light intensity** | Iv | cd | – | – | – |

# Approvals, markings and their importance.

In the following, excerpts of approvals that are currently issued in Europe and their symbols will be given with their corresponding importance. Please check wether your application is safety relevant.

An application is safety relevant when failure of anchorages would cause risk to human life or serious injuries and/or lead to considerable economic consequences. In this case please use anchors with a European Technical (ETA) or with a German Approval.

You may recognise these anchors by:

ETA-05/0069, for cracked concrete

**European Technical Approval/Assessment**
Issued by a European approval authority (e. g. DIBt) on the basis of the guidelines for European technical approvals (ETAG). ETA (English): European Technical Approval/Assessment. CE: The CE marks the conformity of the product to all applicable legal provisions in which their installation is intended. This means that the CE mark only certifies that the requirements determined in the relevant harmonisation legal provisions of the union have been complied with.
Products with the CE mark can be freely traded in the European Economic Market.

**General Building Authority Approval:**
German approval, issued by the DIBt, Berlin with the accompanying certificate of conformity for construction products with the general building authority approval. Confirmed by a material testing institute.



ICC ES ESR-1990 See ICC-ES Evaluation Report at www.icc-es.org

ICC ESR-2948

**ICC = International Code Council, formed from BOCA, ICBO & SBCCI:**
ICC Evaluation Service Inc. (ICC ES) issues reports, e. g. for subsequent anchoring on the basis of the International Building Code® and the related standards in the United States of America.

**FM Certificate:**
Recognised for use in local water-based fire extinguisher systems (Factory Mutual Research Corporation for Property Conservation, American insurance company).

**VdS-Certificate:**
Recognised for the use in local water-based fire extinguisher systems (formerly: Association of Property Insurers, now: VdS Damage Prevention)

**Sprinkler Systems:**
Meets the requirements according to VdS CEA 4001.

**UL Certificate:**
Recognised as pipe hangers for use e.g. in local water-based fire extinguisher systems (UL Online Certification Directory, VFXT.EX16429).




**Fire-tested product MLAR:**
The product was subjected to a fire test. A “Examination report regarding testing according the German Muster-Leitungsanlagenrichtlinie“ (MLAR) is available.




**Fire-tested product MLAR:**
The product was subjected to a fire test. A “Examination report regarding testing according the German Muster-Leitungsanlagenrichtlinie“ (MLAR) is available.




**Fire-tested product DIN EN 1366-1:**
The product was subjected to a fire test. A "Examination report" according DIN EN 1366-1 is available.




**Fire-tested product DIN 4102-2:**
The product was subjected to a fire test. A "Examination report" according DIN 4102-2 is available.




**Sound insulation tested according DIN 4109:**
The product was subjected to a sound insulation test. A "measurement of the insertion loss" is available in a test report.




**Fixing that can be dynamically loaded:**
The fixing is suitable and approved for anchoring of “not predominantly static“ (i.e. dynamic) loads.




Tested for flame resistance
according to VDE.




The RAL Gütezeichen (quality mark) for Rohrbefestigung (pipe supports) is awarded by the RAL Gütegemeinschaft Rohrbefestigung e.V. This organization grants specific quality marks:

**Rohrbefestigung (RAL-GZ 655):**
This mark is given to products that meet stringent technical and quality standards for pipe supports, such as pipe clamps, brackets, and mounting rails.

# Catalogue fixing systems.

## Products for use in fixing technology.

**The fixing catalogue offers many facts and helps with quick and safe product selection, e.g.:**

- Produktbeschreibungen mit Vorteile/Nutzen im Überblick
- Tips for installation
- Application aids
- Detailed technical data and drawings
- Basics of fastening technology
- All you need to know about professional fixing

**Order now: info@fischer.com**

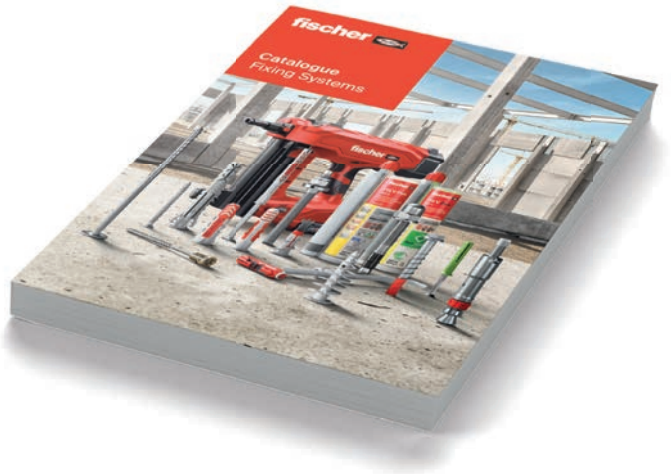




# Main catalogue EWI.

## All about the fischer range for façades with external thermal insulation composite systems (ETICS) for new build and renovation.

**We offer a wide range of fixing solutions for the installation of insulation boards, such as:**

- Products for different building materials, materials, thicknesses and fire protection and system requirements.
- System providers and installers of ETICS can find the optimal building the optimum solution in terms of building physics, easy to apply and safe solution within the framework of the European Technical Assessment (ETA).

**Order now: verkaufsinnendienst@fischer.de**

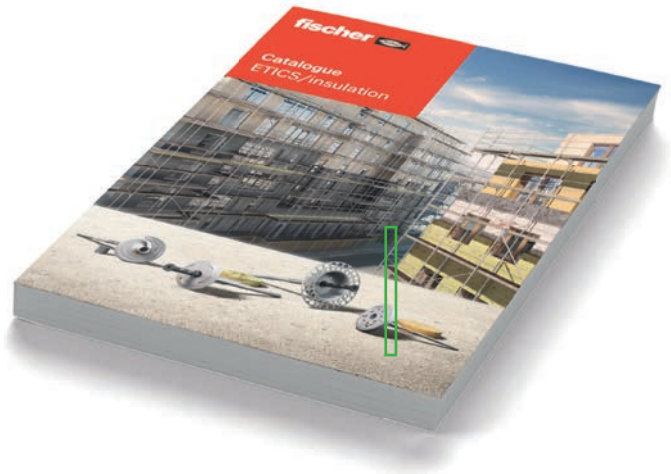

# Catalogue Façade Systems.

## All facts about the fischer façade range and its applications.

**The Façade Systems catalogue offers many facts and helps with quick and safe product selection, e.g.:**

- Presentation of Zykon panel anchor, machine technology, drill bits, subframes, general fixing products and accessories with detailed technical data and illustrations.
- Application support.
- Basic knowledge about undercut anchors and subframe systems.
- Available design software

**Order now: info@fischer.com**

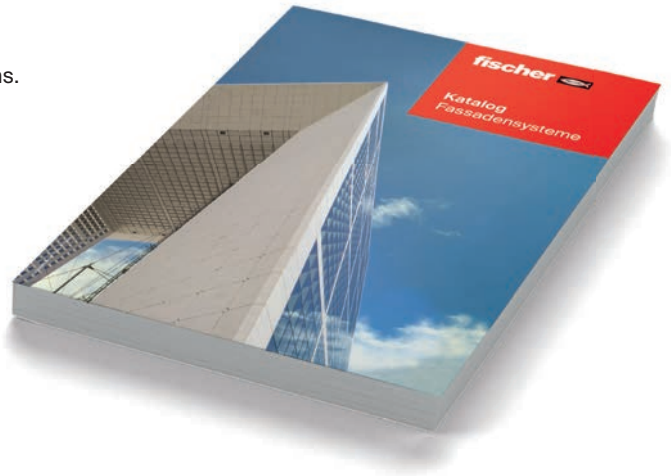




# Catalogue FireStop.

## Products for use in passive fire protection.

**The FireStop catalogue offers many facts and helps with fast and safe product selection, e.g.:**

- Basics of passive fire protection
- Product and system presentations
- Application aids
- Detailed technical data and drawings

**Order now: verkaufsinnendienst@fischer.de**



## Germany
**fischer Deutschland Vertriebs GmbH**
Klaus-Fischer-Straße 1
72178 Waldachtal
P +49 7443 12 - 6000
F +49 7443 12 - 4500
info@fischer.de
**www.fischer.de**

## Argentina
**fischer Argentina S.A.**
Armenia 3044
1605 Munro Ra-PCIA Buenos Aires
P +54 1147 21 7700
F +54 1147 56 13 11
asistenciatecnica@fischer.com.ar
**www.fischer.com.ar**

## Austria
**fischer Austria GmbH**
Wiener Straße 95
2514 Traiskirchen
P +43 2252 53730 0
F +43 2252 53730 70
office@fischer.at
**www.fischer.at**

## Belgium
**fischer Cobemabel s.n.c**
Schaliënhoevedreef 20 D
2800 Mechelen
P +32 152 8 47 00
F +32 152 8 47 10
info@fischer.be
**www.fischer.be**

## Brazil
**fischer Brasil Indústria Comércio Ltda.**
Estrada do Dende, 300 Ilha do Governador
21920-001 Rio de Janeiro-RJ
P +55 21 2467 87  96
F +55 21 2467 01 44
fischer@fischerbrasil.com.br
**www.fischerbrasil.com.br**

## China
**fischer (Taicang) fixings Co. Ltd.**
No. 17, Lane 166, Guchuan Road, 14th Floor, Building 2, Zhongjun Tianyue Center
200333 Shanghai
P +86 21 51 00 16 68
F +86 21 65 97 96 22
ficn@fischer.com.cn
**www.fischer.com.cn**

## Denmark
**fischer a/s**
Sandvadsvej 17 A
4600 Køge
P +45 46 32 02 20
F +45 46 32 50 52
fidk@fischerdanmark.dk
**www.fischerdanmark.dk**

## Finland
**fischer Finland Oy**
Suomalaistentie 7 B
02270 Espoo
P +358 20 741 46 60
F +358 20 741 46 69
orders@fischerfinland.fi
www.fischerfinland.fi

## France
**fischer S. A. S.**
12, rue Livio, P. O. Box 10182
67022 Strasbourg-Cedex 1
P +33 388 39 18 67
F +33 388 39 80 44
info@fischer.fr
**www.fischer.fr**

## Greece
**fischer Hellas**
Kalavriton 2 & Kaiafa
14564 Kifissia, Athens
P +30 21 02 83 81 67
F +30 21 02 83 81 69
info@fischer.gr
**www.fischer.gr**

## Hungary
**fischer Hungária Bt.**
Szerémi út 7/b
1117 Budapest
P +36 1 347 97 55
F +36 1 347 97 66
info@fischerhungary.hu
**www.fischerhungary.hu**

## India
**fischer Building Materials India PVT Ltd.**
Unit 101, First Level, No. 3 (Old 4),
Prestige Sigma, Vittal Mallya Road,
Ward No. 76, Richmond Town
560001 Bangalore, Karnataka
P +91 0804 1511 991/92/93
F +91 0804 1511 989
info@fischer.in
**www.fischer.in**

## Italy
**fischer italia S.r.L**
Corso Stati Uniti, 25, Casella Postale 391
35127 Padova Z.I. Sud
P +39 049 8 06 31 11
F +39 049 8 06 34 01
sercli@fischeritalia.it
**www.fischeritalia.it**

## Japan
**fischer Japan K.K.**
Seishin Kudan Building 3rd Floor 3-4-15
Kudan Minami Chiyoda-ku, 102-0074 Tokyo
P +81 33 26 34 49 1
F +81 36 27 29 93 5
info@fischerjapan.co.jp
www.fischerjapan.co.jp

## Mexico
**fischer Sistemas de Fijación, S.A. de C.V.**
Blvd. Manuel Avila Camacho 3130-400B
54020 Col. Valle Dorado, Tlalnepantla
P +52 55 55 72 08 83
F +52 55 55 72 15 90
info@fischermex.com.mx
**www.fischermex.com.mx**

## The Netherlands
**fischer Benelux B.V.**
Gooimeer 14
1411 DE Naarden
P +31 35 6 95 66 66
F +31 35 6 95 66 99
info@fischer.nl
**www.fischer.nl**

## Norway
**fischer Norge AS**
Oluf Onsumsvei 9
0680 Oslo
P +47 23 24 27 10
F +47 23 24 27 13
ordre@fischernorge.no
**www.fischernorge.no**

## The Philippines
**fischer PH Asia, Inc.**
No 100 Congressional Avenue, Project 8
1106 Quezon City, Metro Manila
P +63 28 36 25 102
F +63 28 80 32 56
joselito.ladlad@fischerph.com
**www.fischer.ph**

## Poland
**fischer Polska Sp.z o.o**
ul. Albatrosow 2
30-716 Kraków
P +48 12 2 90 08 80
F +48 12 2 90 08 88
info@fischerpolska.pl
**www.fischerpolska.pl**

## Portugal
**fischerwerke Portugal, Lda.**
Rua das Musas, Passeio dos Cruzados
Lote 2.01 (Bloco3), Loja 8 (01.D) / Parque
das Nações, 1990-171 Lisboa
P +351 218 954 180
F +351 218 967 066
fischerportugal.info@fischer.pt
**www.fischer.pt**

## Qatar
**fischer fasteners QD Trading WLL**
Building No. 233, Office No. 8A, 1st Floor,
Street No. – 230, Zone No. 41 C Ring Road,
35190 Doha
enquiry@fischer.qa
**www.fischer.qa**

## Romania
**fischer fixings Romania S.R.L.**
Strada Oradiei, Nr. 1-3-5-7
400220 Cluj Napoca, Judetul Cluj
P +40 264 455 166
F +40 264 403 060
zoltan.kovacs@fischer.com.ro
**www.fischer.com.ro**

## Russia
**OOO fischer Befestigungssysteme Rus**
Leningradskoe shosse, 47, Bldg. 2, 2nd
floor, apt. VI, 125195 Moscow
P +7 495 223 61 62
F +7 495 223 03 34
info@fischerfixing.ru
**www.fischerfixing.ru**

## Singapure
**fischer systems Asia Pte. Ltd.**
4 Kaki Bukit Avenue 1, #01-06
417939 Singapore
P +65 6741 0480
F +65 6741 0481
sales@fischer.sg
**www.fischer.sg**

## Slovakia
**fischer SK. s.r.o.**
Nová Rožňavská 134 A
831 04 Bratislava
P +421 2 4920 60 46
F +421 2 4920 60 44
info@fischerwerke.sk
**www.fischer-sk.sk**

## Spain
**fischer ibérica S.A.U.**
Klaus Fischer 1
43300 Mont-Roig del Camp Tarragona
P +34 977 83 87 11
F +34 977 83 87 70
servicio.cliente@fischer.es
**www.fischer.es**

## South Korea
**fischer Korea Co., Ltd (fikr)**
2nd Floor, Samryung Bd. 55
Maeheon-ro 6-gil, Seocho-gu,u, Seoul,
Korea 08390
P +82 1544 89 55
F +82 1544 89 03
info@fischerkorea.com
**www.fischerkorea.com**

## Sweden
**fischer Sverige AB**
Nygatan 93
602 34 Norrköping
P +46 11 31 44 50
info@fischersverige.se
**www.fischersverige.se**

## Türkiye
**fischer Metal Sanayi Ve Ticaret Ltd Şti**
Cevizli Mahallesi Mustafa Kemal Paşa Cad.
Seyit Gazi Sok. No 66, Hukukçular Towers A
Blok, 34865 Kartal İstanbul
P +90 216 326 00 66
F +90 216 326 00 18
info@fischer.com.tr
**www.fischer.com.tr**

## United Kingdom (UK)
**fischer fixings UK Ltd.**
Whitely Road
Oxon OX10 9AT Wallingford
P +44 1491 82 79 00
F +44 1491 82 79 53
info@fischer.co.uk
**www.fischer.co.uk**

## Unites States of America
**fischer fixings LLC (fius)**
205 US HWY 46, Suite 4 07512 Totowa,
New Jersey
P +1 973 256 30 45
F +1 845 625 26 66
sales@fischerus.net
**www.fischerfixings.com**

## United Arab Emirates
**fischer FZE**
R/A 07, BA - 04, Jebel Ali Free Zone
Dubai P.O. Box 261738
P +97 14 8 83 74 77
F +97 14 8 83 74 76
enquiry@fischer.ae
**www.fischer.ae**

## Vietnam
**fischer production Company Limited –**
**Tay Ninh Branch**
Lot 36-23-B, 36-24, D14A Road, Phuoc
Dong Industrial Park, Phuoc Dong Commu-
ne, Go Dau District, Tay Ninh Province
info@fischer.vn

The information in this catalogue is intended for general guidance only and is given without engagement. Additional information and advice on specific applications is available from our Technical Support Team. For this however, we require a precise description of your particular application.
All the data in this catalogue concerning work with our fixing elements must be adapted to suit local conditions and the type of materials in use.
If no detailed performance specifications are given for certain articles and types, please contact our Technical Service Department for advice.

**fischerwerke GmbH & Co. KG**
72178 Waldachtal
Germany

We cannot be responsible for any errors, and we reserve the right to make technical and range modifications without notice. No liability is accepted for printing errors and omissions.

Your dealer

**www.fischer-international.com**

**fischer stands for**

Fixing Systems
fischertechnik
Consulting
Electronic Solutions

**fischerwerke GmbH & Co. KG**
Klaus-Fischer-Straße 1 · 72178 Waldachtal
Germany
T +49 7443 12-0
**www.fischer-international.com** · info@fischer.de

4 048962 263480

103746 (4) · 08/2024 · V-MB · Printed in Germany · Subject to technical changes.